2011-2012

Batterie, Batteries, Batterien, Batteries, Baterías, Baterias, Μπαταρίες, Akumulatory, Аккумуляторы

MAGIS

START

CARGO

ETS

RUN

ES

MAGNETI MARELLI

checkstar SERVICE NETWORK

Indice
Contents
Inhaltsverzeichnis
Sommaire
Indice
Indice
Περιεχομενα
Spis treści
Содержание

Legenda
Legend
Erläuterung
Légende
Leyenda
Legenda
Ευρετηριο
Legenda
Легенда

4

Descrizione gamma
Range description
Produktbeschreibung
Description gamme
Descripciòn gama
Descricao gama
Περιγραφή Γκάμας
Opis produktów
Описание продуктов

9

Gamma
Range
Reihe
Gamme
Gama
Gama
Υκάμα
Gama
Гамма

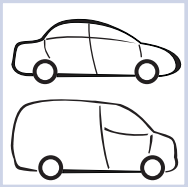

27

Batterie START
START batteries
Batterietyp START
Batteries START
Baterías START
Baterias START
Μπαταρίες START
Akumulatory START
Аккумуляторы серии START

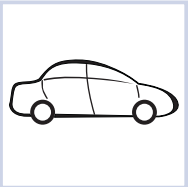

29

Batterie RUN
RUN batteries
Batterietyp RUN
Batteries RUN
Baterías RUN
Baterias RUN
Μπαταρίες RUN
Akumulatory RUN
Аккумуляторы серии RUN

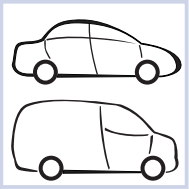

30

Batterie MAGIS
MAGIS batteries
Batterietyp MAGIS
Batteries MAGIS
Baterías MAGIS
Baterias MAGIS
Μπαταρίες MAGIS
Akumulatory MAGIS
Аккумуляторы серии MAGIS

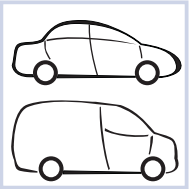

31

Batterie ETS
ETS batteries
Batterietyp ETS
Batteries ETS
Baterías ETS
Baterias ETS
Μπαταρίες ETS
Akumulatory ETS
Аккумуляторы серии ETS

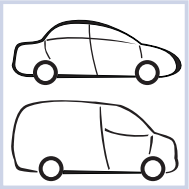

33

Batterie ES
ES batteries
Batterietyp ES
Batteries ES
Baterías ES
Baterias ES
Μπαταρίες ES
Akumulatory ES
Аккумуляторы серии ES

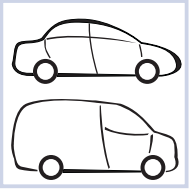

39

Gamma
Range
Reihe
Gamme
Gama
Gama
Υκάμα
Gama
Гамма

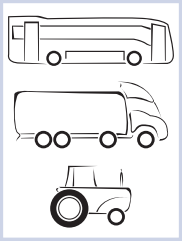

45

Batterie CARGO
CARGO batteries
Batterietyp CARGO
Batteries CARGO
Baterías CARGO
Baterias CARGO
Μπαταρίες CARGO
Akumulatory CARGO
Аккумуляторы серии CARGO

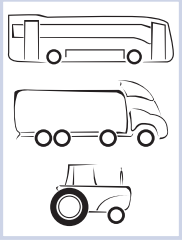

47

Applicazione per marca e veicolo
Vehicle application guide
Zuordnung nach Marke und Fahrzeug
Affectations par marques et véhicules
Aplicación por marca y vehículo
Aplicação por marca e veiculo
Εφαρμογη ανα μοντελο
Zastosowanie dla marki i pojazdu
Применение

53

281

307

Tabella comparativa
Cross reference guide
Gegenüberstellung
Table de correspondance
Tabla de equivalencias
Tabela de equivalências
Πινακας αντιστοιχιων
Tabela porównawcza
Кросс-таблицаv

COMPETITORS 397

Legenda
Legend
Erläuterung
Légende
Leyenda
Legenda
Ευρετηριο
Legenda
Легенда

DIN

Codici Magneti Marelli e DIN
Magneti Marelli and DIN Referénces
Magneti Marelli Nr. und DIN Nr.
Referénces Magneti Marelli et DIN
Códigos Magneti Marelli y DIN
Códigos Magneti Marelli e DIN
Κωδικοί Magneti Marelli και Παραπομπές
Kody Magneti Marelli oraz DIN
Коды Магнети Марелии и DIN

Ah - A

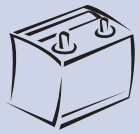

Dati tecnici / Dimensioni
Technical Data / Dimensions
Technische Daten / Abmessungen
Données Techniques / Dimensions
Datos Técnicos / Dimensiones
Datos Técnicos / Dimensões
Τεχνικά χαρακτηριστικά / Διαστάσεις
Dane techniczne / Wymiary
Технические данные/Измерения

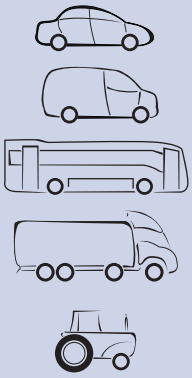

Costruttore e Modello
Make and Model
Hersteller und Modell
Modèle
Constructor y Modelo
Montadora e Modelo
Μαρκα και οντελο
Producent i model
Сделано и смоделировано

Polarità
12 Volt

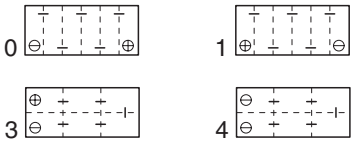

ATTACCHI ALLA BASE - BASE CONNECTION

Legenda
Legend
Erläuterung
Légende
Leyenda
Legenda
Ευρετηριο
Legenda
Легенда

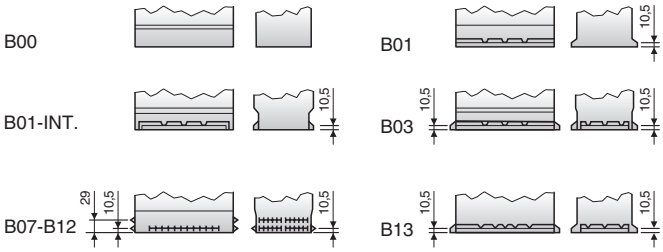

TIPO POLI - TYPE POLES

1 = Standard

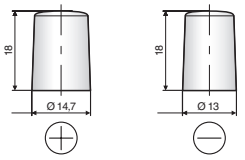

3 = Applicazioni Giapponesi
Japanese applications

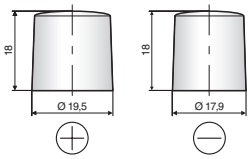

Magneti Marelli After Market Parts and Services S.p.A. ha curato con particolare attenzione la stesura del presente catalogo; declina comunque ogni responsabilità per eventuali errori od omissioni relativi a schemi, disegni, corrispondenze con i codici O.E. ecc. e si riserva il diritto di apportare modifiche al contenuto senza l'obbligo di darne preventiva comunicazione. Sono particolarmente graditi, da parte degli utenti, commenti, segnalazioni di inesattezze e qualsiasi altro suggerimento atto a rendere più efficace la prossima edizione del catalogo.

Magneti Marelli After Market Parts and Services S.p.A. has devoted its best attention to the editing of this catalogue; it nevertheless declines any responsibility for possible mistakes or omissions regarding figures, drawings, correspondence with O.E. codes etc. and it reserves the right to modify the contents without prior notice. Users' comments, reports of inaccuracies or any other suggestions which may in any way improve the next edition of this catalogue are warmly welcomed.

Magneti Marelli After Market Parts and Services S.p.A. hat diesen Katalog sorgfältig verfasst. Die Firma enthebt sich jeglicher Verantwortung für eventuelle Fehler oder Auslassungen hinsichtlich Schemen, Zeichnungen, Übereinstimmungen mit O.E. Codes usw. und behält sich das Recht vor, ohne Ankündigung, am Inhalt Veränderungen vorzunehmen. Anmerkungen, Fehlerhinweise und weitere Anregungen seitens der Kunden werden germe entgegengenommen, um die nächste Ausgabe des Katalogs effizienter zu gestalten.

Magneti Marelli After Market Parts and Services S.p.A. a soigné avec une attention particulière la rédaction de ce catalogue; elle décline cependant toute responsabilité pour toute erreur ou omission éventuelle dans les schémas, les dessins, les correspondances avec les codes O.E., etc. et se réserve le droit d'en modifier le contenu sans obligation de communication préalable. Les commentaires, les signalisations d'inexactitudes et toute autre suggestion des utilisateurs susceptibles de rendre la prochaine rédaction du catalogue plus efficace seront particulièrement appréciés.

Magneti Marelli After Market Parts and Services S.p.A. ha cuidado con especial atención la redacción del presente catálogo; de todas maneras declina toda responsabilidad por eventuales errores o omisiones relativos a esquemas, diseños, correspondencia con los códigos O.E., etc., y se reserva el derecho de aportar modificaciones al contenido sin la obligación de previo aviso. Se agradecen especialmente los comentarios, las indicaciones de inexactitudes y cualquier otra sugerencia por parte de los usuarios que sean útiles para hacer más eficaz la próxima edición del catálogo.

Magneti Marelli After Market Parts and Services S.p.A. cuidou com particular atenção a redação do presente catálogo; como quer que seja, rejeita qualquer responsabilidade face a eventuais erros o omissões relacionados aos esquemas, desenhos, correspondências aos códigos O.E. etc. e reserva-se o direito de introduzir alterações ao seu conteúdo sem a obrigação de comunicação prévia das mesmas. São particularmente bem aceitos, comentários, sinalizações de inexatidões e qualquer outra sugestão idônea a tornar mais eficaz a próxima edição do catálogo.

Η Magneti Marelli After Market Parts and Services S.p.A. φροντισε με καθε λεπτομερεια την ορθοτητα των στοιχειων αυτου του καταλογου, δεν φερει ομως καμια ευθυνη για τυχον λαθη ή παραληψεις που σχετιζονται με σχηματα, σχεδια, αντιστοιχιες με γνησια νουμερα κτλ. και επιφυλασσεται του δικαιωματος να αλλαξει το περιεχομενο του καταλογου οποιαδηποτε στιγμη χωρις προτερη ενημερωση. Οποιαδηποτε σχολια η παρατηρησεις, με στοχο την βελτιωση του καταλογου, ειναι ευπροσδεκτα.

Firma Magneti Marelli After Market Parts and Services S.p.A. dołożyła szczególnych starań przy opracowywaniu niniejszego katalogu. Nie ponosi ona jednak żadnej odpowiedzialności za ewentualne błędy lub braki dotyczące schematów, rysunków, zgodności z kodami O.E., itp. u. Firma Magneti Marelli After Market Parts and Services S.p.A zastrzega sobie prawo do wprowadzania zmian bez obowiązku uprzedniego powiadamiania o tym. Szczególnie mile widziane są komentarze i sygnały dotyczące nieprawidłowości oraz jakiekolwiek inne sugestie zgłaszane przez klientów, mające na celu udoskonalenie następnych edycji katalogu.

Magneti Marelli After Market Parts and Services S.p.A. уделило много времени и внимания редактированию этого каталога; Magneti Marelli After Market Parts and Services S.p.A. не несёт ответственности за возможные ошибки или упущения относительно фигур, рисунков, сочетания с кодами O.E. и т.д. и резервирует право изменить содержание без предшествующего уведомления. Комментарии пользователей, сообщения погрешностей или любые другие предложения, которые, возможно, никогда не улучшают следующий выпуск этого каталога, тепло приветствуются.

È vietata la riproduzione, anche parziale, del contenuto del presente catalogo senza preventiva autorizzazione scritta della Magneti Marelli After Market Parts and Services S.p.A., che tutelerà i propri diritti a termine di legge.

It is forbidden to reproduce, even partially, the contents of this catalogue without prior written consent from Magneti Marelli After Market Parts and Services S.p.A., who will protect its rights in accordance with the law.

Die Vervielfältigung, auch teilweise, des urheberrechtlich geschützten Inhalts des vorliegenden Katalogs ist ohne schriftliche Genehmigung durch Magneti Marelli After Market Parts and Services S.p.A. untersagt.

Il est interdit de reproduire même partiellement le contenu de ce catalogue sans autorisation écrite préalable de Magneti Marelli After Market Parts and Services S.p.A., qui protégera ses droits selon les termes de la loi.

Está prohibida la reproducción, total o parcial, del contenido del presente catálogo sin previa autorización escrita de Magneti Marelli After Market Parts and Services S.p.A., que protegerá sus propios derechos con arreglo a la ley.

É proibida a reprodução, também parcial, do conteúdo do presente catálogo sem a prévia autorização escrita de Magneti Marelli After Market Parts and Services S.p.A., que defenderá os próprios direitos, nos termos de lei.

Απαγορευται η αναπαραγωγη, ολικη η μερικη,του περιεχομενου του παροντος καταλογου χωρις την γραπτη εξουσιοδοτηση της Magneti Marelli S.p.A

Zabronina jest nawet częściowa reprodukcja zawartości katalogu bez uprzedniej pisemnej autoryzacji ze strony firmy Magneti Marelli After Market Parts and Services S.p.A., która chroni swą własność zgodnie z przepisami prawa.

Запрещяется воспроизводить, даже частично, содержание этого каталога без предварительного письменного согласия от Magneti Marelli S.p. A., которая будет защищать свои права в соответствии с законом.

La corrispondenza dovrà essere inviata a:
Correspondence should be sent to:
Der Briefverkehr ist zu richten an:
Envoyer la correspondance à:
La correspondencia debe ser enviada a:
La correspondência deverá ser enviada a:
Η αλληλογραφια θα πρεπει να αποστελεται:
Korespondencjęa należy przesyłać na adres:
Соответствующую корреспонденцию просим

MAGNETI MARELLI AFTER MARKET
PARTS AND SERVICE S.P.A.
Viale Aldo Borletti, 61/63
20011 Corbetta (Milano) Italia
Tel. +39 02 972 27 400
Fax +39 02 972 27 234

Descrizione gamma
Range description
Produktbeschreibung
Description gamme
Descripción gama
Descrição gama
Περιγραφή Γκάμας
Opis produktów
Описание продуктов

Il sistema Stop&Start è un automatismo che arresta il motore quando il veicolo si ferma per un tempo prolungato, ad esempio al semaforo o in coda, e lo riavvia non appena si preme il piede sull'acceleratore al momento della ripartenza. Lo scopo principale del sistema Stop&Start, è quello di ridurre il consumo e le emissioni delle auto e, anche se in misura minore, il livello medio di inquinamento acustico. La batteria studiata per questo tipo di sistema è caratterizzata da un'elevata resistenza al ciclaggio e alle numerose scariche cui viene sottoposta durante i frequenti avviamenti. Per questo motivo le batterie START sono l'unico ricambio per auto dotate di questa tecnologia poiché identiche al dispositivo montato in primo impianto.
La gamma Start comprende sia batterie SST evoluzione delle tradizionali batterie al piombo per le vetture equipaggiate solo con sistema Stop&Start, sia batterie AGM per le vetture micro ibride con Stop&Start e Brake Energy Regeneration. La gamma e' quindi in grado di offrire il modello piu' corretto rispetto a quanto montato in primo equipaggiamento.

The Stop&Star automatic system stops the engine whenever the vehicle stops for an extended amount of time, for example at a red traffic light or in a traffic jam, and restarts it as soon as the driver presses on the clutch pedal to get the car moving again. The main purpose of the Stop&Start system is to reduce automobile consumption and emissions, and, although to a lesser amount, the average level of noise pollution. The battery developed for this type of system is characterized by high resistance to cycling and to the large number of discharges it is subjected to during the frequent start-ups.This is why START batteries are the only replacement batteries for automobiles equipped with this technology, as they are identical to the original equipment.
The Start range includes both SST batteries, an evolution from conventional lead batteries only for vehicles equipped with Stop &Start system, and AGM batteries for micro-hybrid cars with Stop&Start and Brake Energy Regeneration. Therefore, the range can offer the battery model best suited to the original equipment.

Das Stop&Start System schaltet den Motor bei längeren Stops ab. Ein Beispiel hierfür ist das Anhalten an Ampeln oder in Staus. Das wiederanlassen des Motors erfolgt sobald das Gaspedal betätigt wird. Die Hauptargumente für das Stop&Start System sind die Senkung des Verbrauchs, der Abgase sowie die Reduktion des Lärmpegels. Aufgrund der vorgegebenen Systemparameter wird für diesen Zweck eine Batterie mit höherer Effizienz, für die immer wiederkehrende Zündlast, eingesetzt. Genau aus diesem Grund sind die START Batterien ein obligatorisches Ersatzteil für Fahrzeuge, die mit solch einer Technologie arbeiten. Die Start Batterien sind identisch den Batterien in der Erstausrüstung.
Die Produktserie Start umfasst sowohl SST-Batterien, die Evolution der traditionellen Bleibatterien, für alle Fahrzeuge, die mit dem Stop&Start System ausgestattet wurden, als auch AGM-Batterien für Mikrohybridwagen mit Stop&Start und Brake Energy Regeneration. Die Serie bietet somit das, gegenüber dem zunächst eingebauten Modell, richtige Modell an.

Le système Stop&Start est un automatisme qui arrête le moteur quand le véhicule s'immobilise pour un temps prolongé, par exemple à un feu rouge ou dans les encombrements et qui le redémarre dès que l'on appuie sur la pédale d'accélérateur au moment de repartir. Le but principal du système Stop&Start est de réduire la consommation et les émissions de gaz polluants et également dans une moindre mesure le niveau moyen des nuisances sonores. La batterie étudiée pour ce type de système est caractérisée par une haute résistance aux cycles et aux nombreuses décharges qui se produisent durant les fréquents démarrages. Pour cette raison, les batteries START sont la seule rechange possible pour les véhicules équipés de cette technologie puisqu'identiques au matériel monté en première monte.
La gamme Start comprend aussi bien des batteries SST, évolution des batteries au plomb traditionnelles réservées aux véhicules équipés du système Stop&Start, que des batteries AGM pour voitures micro-hybrides avec Stop&Start et Brake Energy Regeneration. La gamme offre donc le modèle de batterie le plus adapté à l'équipement d'origine.

El sistema Stop&Start es una automatismo que apaga el motor cuando el vehículo se para durante un tiempo prolongado, por ejemplo en un semáforo o en caravana, y lo arranca tan pronto se pisa el acelerador. La finalidad principal del sistema Stop&Start es el de reducir el consumo y las emisiones del auto y, aunque en menor medida, el nivel medio de contaminación acústica. La batería estudiada para este tipo de sistema se caracteriza por tener una elevada resistencia al ciclaje (carga y descarga) y también a las numerosas descargas a las que se somete durante los frecuentes arranques del motor. Por este motivo las baterías START son las únicas aptas para los automóviles dotados con esta tecnología, por ser idénticas a las montadas en primer equipo.
La gama Start incluye baterías SST, evolución de las tradicionales baterías de plomo para los coches equipados con el sistema Stop&Start, y, también, baterías AGM, para los coches micro híbridos con Stop&Start Brake Energy Regeneration. La gama Start ofrece el modelo más adecuado en relación al que se monta en primer equipo.

O sistema Stop&Start é um automatismo que pára o motor quando o veículo fica imobilizado por longos períodos de tempo, por exemplo num semáforo ou numa fila de trânsito, e volta a ligá-lo mal se carrega no pedal do acelerador quando se quer arrancar. O objectivo principal deste sistema Stop&Start é diminuir o consumo e as emissões dos veículos e, em menor escala, o nível médio de poluição acústica. A bateria concebida para este tipo de sistema caracteriza-se por uma elevada resistência à ciclagem e às numerosas descargas a que é submetida durante os arranques frequentes. Por este motivo, as baterias START são a única peça sobresselente para carros equipadas com esta tecnologia pois são idênticas ao dispositivo montado de início.
A linha Start compreende as baterias SST, uma evolução das baterias de chumbo tradicionais para veículos equipados apenas com o sistema Stop&Start, e as baterias AGM, para veículos micro híbridos com Stop&Start, Brake Energy Regeneration. Dessa forma, a linha pode oferecer o modelo mais adequado em relação ao equipamento original.

Το σύστημα Stop&Start είναι ένα σύστημα που σταματάει την λειτουργία της μηχανής όταν το όχημα είναι ακινητοποιημένο για κάποιο διάστημα, για παράδειγμα στην κίνηση ή στο φανάρι, και ξαναξεκινάει όταν ο οδηγός παρήσει το γκάζι. Ο βασικός σκοπός του συστήματος Stop&Start, είναι να μειώση την κατανάλωση καυσίμου και τις εκπομπές ρύπων των μικρών αυτοκινήτων ενώ παράλληλα συμβάλει στην μείωση της ηχορύπανσης. Η μπαταρία που χρησιμοποιεί το συγκεκριμένο σύστημα χαρακτηρίζεται από υψηλή αντοχή στον κύκλο εργασίας της και στις πολυάριθμες αποφορτίσεις λόγο των συνεχόμενων εκκινήσεων. Γι αυτόν τον λόγο, οι μπαταρίες START είναι οι μόνες που μπορούν να ικανοποιήσουν τις ανάγκες ενός τέτοιου συστήματος.Η χρήση μιας μπαταρίας διαφορετικού τύπου από αυτήν που τοποθετείται αρχικά , προκαλεί την αποσταθεροποίηση ολόκληρου του ηλεκτρονικού συστήματος (μπαταρία, δυναμό, μίζα ,ταμπλω οργάνων κ.α.). Αυτή η σειρά περιλαμβάνει επίσης τις μπαταρίες με τεχνολογία AGM που σχεδιάστηκαν και αναπτύχθηκαν για τα κορυφαία μοντέλα της κατηγορίας. Με βάση την τεχνολογία AGM τα αέρια που δημιουργούνται ανακυκλώνονται εσωτερικά και έτσι οι μπαταρίες δεν χρειάζονται καμία απολύτως συντήρηση, είναι εξαιρετικά ανθεκτικές στις δονήσεις και είναι απόλυτα ασφαλείς: η μπαταρία είναι ερμητικά κλειστή λόγω του συστήματος ασφάλειας VRLA , το οποίο στις κανονικές συνθήκες εργασίας, εμποδίζει οποιαδήποτε τυχαία διαρροή του οξέος ή του αερίου.

Stop&Start jest systemem, który wyłącza silnik podczas dłuższego postoju samochodu, np. na czerwonym świetle lub w korku oraz ponownie go włącza w momencie, gdy zostanie wciśniety pedał sprzęgła. Głównym celem systemu Stop&Start jest redukcja zużycia paliwa, emisji szkodliwych gazów oraz poziomu hałasu. Akumulator przeznaczony do tego systemu charakteryzuje się wysoką odpornością na cykliczne obciążenia oraz liczne rozładowywania podczas częstego rozruchu. Akumulatory START jako jedyne mogą być montowane jako części zamienne w samochodach wyposażonych w system Stop&Start, gdyż ich parametry są identyczne jak akumulatorów pierwszomontazowych.
Gama Start zawiera zarówno akumulatory SST przeznaczone dla pojazdów wyposażonych w system Stop&Start i będące unowocześnioną wersją tradycyjnych akumulatorów ołowiowych, jak i akumulatory AGM dla pojazdów "Micro-Hybrid" z systemem Stop&Start oraz Hamowania Regeneracyjnego. Dzieki temu gama Start jest w stanie zapewnić produkt o lepszych właściwościach niż akumulatory stosowane w pierwszym montażu.

Stop&Start - это система, которая отключает двигатель при кратковременных остановках, на светофоре, при переводе КП в нейтральное положение, а при нажатии на педаль сцепления запускает его. Главная цель системы Stop&Start - снизить расход топлива, выброс вредных веществ или уровень шума, исходящего от автомобиля. Аккумулятор, который предназначен для этой системы, характеризируется устойчивостью к циклическим нагрузкам и длительным сроком эксплуатации. Аккумуляторы Start могут быть установлены только в автомобилях с системой Stop&Start.
Гамма Start включает как аккумуляторы типа SST, которые представляют собой более современную версию традиционных свинцовых аккумуляторов и предназначены для автомобилей с системой "старт-стоп", так и аккумуляторы типа AGM для микро-гибридных автомобилей с системой "старт-стоп" и регенерационным торможением. Линейка Start имеет лучшие характеристики по сравнению с аккумуляторами, которые используются при первичной сборке.

+ 30% di potenza all'avviamento rispetto ad una batteria standard:
Partenze garantite anche nelle più difficili condizioni ambientali.

Maggiore numero di piastre:
• elevate performances all'avviamento
• un rapido recupero dell'energia scaricata ad auto in funzione.
Coperchio con degasaggio centralizzato, dotato di labirinto, pastiglia integrata rompifiamma e Check Control System per una verifica rapida e semplice del livello dell'elettrolita e dello stato di carica della batteria.

RUN è la batteria per le auto moderne meglio equipaggiate che richiedono una erogazione di corrente sempre maggiore, garantendo il massimo di potenza, controllo, e sicurezza.
Le batterie RUN sono dotate di originale monocopripolo personalizzato con marchio Magneti Marelli in rilievo

+ 30% power STARTt-up with respect to a standard battery:
Start-ups assured in most difficult environmental conditions too.

More plates:
• start-up high performance
• fast recovery of energy discharged with car running.
Cover with centralized degassing, equipped with labyrinth, built-in flame arrestor and Check Control System for quick and simple check of the electrolyte level and battery charge.

RUN is the battery for modern best equipped cars, which require grater and greater current supply; it assures maximum power, control, and safety.
RUN batteries are fitted with an original single-pole cover personalized with the embossed Magneti Marelli logo

+ 30% höhere Kaltstartleistung gegenüber herkömmlichen Standardbatterien:
Zuverlässiger Sicherer Start ist auch unter schwierigsten Umweltbedingungen gewährleistet.

Größere Plattenzahl:
• Hochleistung beim Start
• Schnelleres Wiederaufladen bei laufendem Fahrzeug.
Abdeckung mit Zentralentgasung, ausgestattet mit Labyrinth, eingebautem Rückzündschutz und Check Control System für ein schnelles und einfaches Überprüfen des Elektrolytstands und des Batterieladestands.

RUN ist die Batterie für moderne Fahrzeuge mit reicher umfangreicher Ausstattung, die eine welce einer immer größere Stromversorgung benötigen, und garantiert maximale Leistung, Kontrolle und Sicherheit.
Die RUN-Batterien wurden mit einem Original-Poldeckel mit aufgedrucktem Logo Magneti Marelli versehen.

+ 30% de puissance au démarrage par rapport à une batterie classique :
Démarrage optimal garanti même dans les conditions climatiques difficiles.

Un plus grand nombre de plaques :
• des prestations élevées au démarrage
• une récupération rapide de l'énergie dépensée lorsque le véhicule est en marche.
Couvercle à dégazage centralisé, pourvu de labyrinthe, pare-flamme intégré et Check Control System pour une vérification simple et rapide du niveau de l'électrolyte et de l'état de charge de la batterie.

RUN est la batterie des voitures modernes équipées de systèmes électroniques, dont le besoin est de recevoir toujours plus de courant, avec la certitude d'obtenir le maximum de puissance, de contrôle et de sécurité.
Les batteries RUN sont pourvues de couvre-cosses d'origine individuels, avec logo Magneti Marelli imprimé en relief.

+ 30% de potencia para el arranque respecto a las baterías estándar:
Arranque garantizado aun en las condiciones climáticas más duras.

Mayor número de placas:
• elevado rendimiento para el arranque,
• rápida recuperación de la energía descargada con el vehículo funcionando.
Tapa con desgasificación centralizada, con labirinto, pastilla integrada corta flama y Check Control System para una verificación rápida y sencilla del nivel de electrolito y del status de carga de la batería.

RUN es la batería para los coches modernos mejor equipados, que requieren una entrega de corriente cada vez mayor, garantizando la máxima potencia, control y seguridad.
Las baterías RUN tienen mono cubrepolos personalizado con la marca Magneti Marelli en relieve.

+ 30% de potência no arranque em relação a uma bateria standard:
Partidas garantidas mesmo nas mais difíceis condições ambientais.

Maior número de chapas:
• altas performances no arranque
• uma rápida recuperação da energia descarregada com o veículo em função.
Tampa com desgasificação centralizada, dotada de labirinto, pastilha antichama integrada e Check Control System, para uma verificação rápida e simples do nível do eletrólito e da condição de carga da bateria.

RUN é a bateria para os veículos modernos de último equipamento e que pedem uma distribuição de corrente sempre maior, garantindo o máximo de potência, controlo, e segurança.
As baterias RUN são dotadas de uma cobertura de pólo individual original personalizada com a marca Magneti Marelli em relevo.

+30% ρεύμα εκκίνησης σε σχέση με τις απλές μπαταρίες: Σίγουρη εκκίνηση ακόμα και στις πιο ακραίες καιρικές συνθήκες.

Περισσότερες πλάκες:
• υψηλή ποιότητα εκκίνησης
• γρήγορη ανάκτηση ενέργειας Η μπαταρία
Καπάκι με κεντρικό αεραγωγό, εφοδιασμένο με λαβύρινθο, ξεχωριστή και συστήμα ελέγχου για ένα γρήγορο και εύκολο έλεγχο της στάθμης ηλεκτρολύτη και της κατάστασης φόρτισης της μπαταρίας.

RUN είναι απευθύνεται σε αυτοκίνητα νέας τεχνολογίας, που χρειάζονται μεγαλύτερη ποσότητα ρεύματος.
Εγγυάται μέγιστη δύναμη και ασφάλεια. Οι μπαταρίες RUN είναι εξοπλισμένες με το γνήσιο κάλυμμα πόλου με το σήμα Magneti Marelli ανάγλυφο Εγγυάται μέγιστη δύναμη και ασφάλεια.

Moc rozruchowa wyższa o 30% w stosunku do akumulatora standardowego:
Rozruch jest zapewniony także w najtrudniejszych warunkach otoczenia.

Większa ilość płyt:
• wysokie osiągi przy rozruchu
• szybkie odzyskanie utraconej energii podczas jazdy samochodu.
Pokrywa labiryntowa z centralnym odgazowywaniem wyposażona w system ochrony przed zapłonem wstecznym oraz magiczne oczko pozwala na szybką i prostą kontrolę poziomu elektrolitu oraz stanu naładowania akumulatora.

RUN jest to akumulator dla nowoczesnych samochodów, dobrze wyposażonych, które wymagają coraz większego poboru prądu, gwarantujący maksimum mocy, kontrolę i bezpieczeństwo.
Akumulatory RUN są wyposażone w jednolite osłony biegunów z wytłoczonym logiem Magneti Marelli

На 30% больше силы при запуске по сравнению с обычными стартерными батареями
Запуск при любых погодних условиях

Больше пластин:
• высокая эффективность запуска
• быстрая подзарядка при движении автомобиля.
Лабиринтная крышка с системой дегазации и встроенным пламя гасителем позволяет быстро и легко проверить уровень электролита и степень заряженности аккумулятора.

Серия RUN - это аккумуляторы, которые предназначены для современных, хорошооборудованных автомобилей с высоким энергопотреблением; они гарантируют максимальную мощность, контроль и безопасность.
На клеммах аккумуляторов RUN есть защитная пластиковая крышка, на которой выбит логотип Magneti Marelli

Batterie Magis:
Le batterie Magis sono dotate di doppio coperchio con labirinto termosaldato che facilita il riciclo delle particelle di acido e ne impedisce la fuoriuscita, da un lato proteggendo il vano motore o il bagagliaio dal rischio corrosioni e dall'altro conservando più a lungo la riserva di elettrolito e allungando di conseguenza il ciclo di vita della batteria. Il doppio coperchio permette alla batteria Magis di conformarsi alle specifiche automotive previste dal Roll Over Test, richiesto e considerato essenziale dalle Case Automobilistiche ai fini della sicurezza in caso di incidente stradale con ribaltamento del veicolo. Nel test la batteria viene inclinata su ciascun lato e quindi completamente rovesciata per 2 minuti senza che si verifichi fuoriuscita di elettrolito.
Le Magis offrono inoltre elevate performances in avviamento, rispetto a una batteria standard, grazie al numero ottimizzato delle piastre sono tutte certificate ISO/TS 16949, che qualifica le batterie equivalenti all' originale e sono dotate di Flame Arrestor che permette la fuoriuscita di gas e protegge la batteria da inneschi esterni. Tutte le Magis sono Made in Italy, garanzia di alta qualità.

Magis batteries:
Magis batteries feature a double cover with heat-welded labyrinth that makes the recirculation of acid particles easier and prevents their leakage, on the one hand protecting the engine compartment against the risk of corrosion, and on the other preserving the electrolyte reserve, thus extending the lifecycle of the battery. Thanks to this double cover, Magis batteries comply with the automotive specifications set out in the Roll Over Test, requested and considered to be of fundamental importance by carmakers for safety reasons in case of accident involving vehicle roll-over. During the test, the battery is tilted on each side and then completely turned upside down for 2 minutes, with no electrolyte leaking out.
Magis batteries also offer excellent start-up performances compared to standard batteries, thanks to the optimized number of plates. All Magis batteries are ISO/TS 16949 certified, which qualifies them as being equivalent to original batteries. They are also equipped with Flame Arrestor, which allows gas to seep out and protects the batteries from external ignitions. Magis batteries are Made in Italy, a guarantee of high quality.

Magis-Batterien:
Magis-Batterien besitzen einen Doppeldeckel mit einem wärmeversiegelten Labyrinth, welcher die Re-Zirkulation der Säurepartikel erleichtert und deren Auslaufen verhindert. Einerseits schützt diese Bauweise den Motorraum gegen das Risiko der Verätzung und andererseits wird die elektrolytische Zersetzung des Wassers verhindert, dies verlängert die Lebensdauer der Batterie. Dank des Doppeldeckels erfüllen Magis-Batterien die Spezifikationen der Fahrzeughersteller, die im sogenannten „Roll Over Test" festgelegt sind. Diese Spezifikationen werden von Fahrzeugherstellern aus Sicherheitsgründen gefordert und sind von fundamentaler Bedeutung im Falle eines Autounfalls mit Überschlagen des Fahrzeuges. Während des Tests wird die Batterie auf jede Seite gekippt und danach für zwei Minuten komplett auf den Kopf gestellt, ohne dass dabei Elektrolyte austreten.
Außerdem bieten Magis-Batterien ein exzellentes Startverhalten im Vergleich zu herkömmlichen Batterien dank der optimierten Anzahl an Platten. Alle Magis-Batterien sind nach ISO/TS 16949 zertifiziert, dies qualifiziert diese Batterien als gleichwertig zu den Original Batterien. Sie sind zudem mit einem Rückzündschutz ausgestattet, dieser ermöglicht das Entweichen von Gas und verhindert Zündungen durch externe Quellen. Magis-Batterien sind „Made in Italy", ein Garant für hohe Qualität.

Batteries Magis :
Les batteries Magis sont dotées d'un couvercle double avec labyrinthe thermosté qui facilite le recyclage des particules d'acide et empêche l'écoulement, d'un côté en protégeant le bloc moteur ou le compartiment à bagages du risque de corrosion, et de l'autre en conservant plus longtemps la réserve d'électrolyte, donc par conséquence le cycle de vie de la batterie. Le couvercle double permet à la batterie Magis d'être conforme aux normes prévus par le Roll Over Test, demandé et considéré comme essentiel par les constructeurs automobiles dans le but de d'apporter plus de sûreté en cas d'accident de la route avec renversement du véhicule. Dans le test, la batterie est inclinée sur chaque côté et ensuite complètement renversée pendant 2 minutes pour vérifier le non écoulement d'électrolyte.
Les batteries Magis offrent également des performances élevées au démarrage en comparaison à une batterie standard grâce au nombre optimisé des plaques. Elles sont toutes certifiées ISO/TS 16949 ce qui les distinguent des batteries équivalentes à l'origine car elles sont dotées d'un « Flame Arrestor » qui permet l'échappement du gaz et protège la batterie des aléas extérieurs. Toutes les batteries Magis sont Made in Italy, garantie de haute qualité.

Baterías Magis
Las baterías Magis están dotadas de doble tapa con laberinto termosoldado que facilita la recirculación de las partículas de ácido e impide la fuga, por un lado protegiendo el vano motor o el maletero del riesgo de corrosión y por otro conservando durante más tiempo la reserva del electrolito y en consecuencia alargando el ciclo de vida de la batería. La doble tapa permite a la batería Magis respetar las especificaciones previstas del Roll Over Test, solicitado y considerado esencial por los Constructores de Automóviles para la seguridad en caso de accidente con volcado del vehículo. En el test la batería se inclina hacia ambos lados y completamente al revés durante 2 minutos sin que se verifiquen fugas de electrolito.
Las Magis ofrecen además elevadas prestaciones de arranque respecto a una batería standard gracias al número optimizado de placas, están todas certificadas ISO/TS 16949, que cualifican las baterías equivalentes a la original y están dotadas del sistema Flame Arrestor que permite la fuga de gas y protege la batería de chispas y llamas del exterior. Todas las Magis son Made in Italy, garantía de alta calidad.

Baterias Magis:
As baterias Magis apresentam tampa labirinto dupla termossoldada que facilita a reciclagem das partículas de ácido e impede vazamentos, protegendo o compartimento do motor ou o compartimento de bagagem contra o risco de corrosão e conservando por mais tempo a reserva de eletrólito, aumentando assim a vida útil da bateria. A tampa dupla permite à bateria Magis atender as especificações automotivas previstas pelo Roll Over Test, exigido e considerado essencial pelas montadoras de veículos em termos de segurança em caso de acidentes com tombamento do veículo. No teste, a bateria é inclinada em cada lado e, em seguida, é invertida completamente por 2 minutos sem que se verifique vazamento de eletrólito.
Além disso, as baterias Magis oferecem um desempenho elevado na partida comparada a baterias convencionais, graças à quantidade otimizada de placas. Todas têm a certificação ISO/TS 16949, que qualifica as baterias equivalentes à original, e são dotadas de interruptor de chamas, que permite a saída de gases e protege a bateria contra fontes de ignição externas. Todas as baterias Magis são fabricadas na Itália, o que representa garantia de alta qualidade.

Μπαταρίες Magis:
Οι μπαταρίες Magis έχουν διπλό καπάκι με θερμοκολημένο «λαβύρινθο» που βοηθάει την ανακύκλωση των όξινων μορίων και εμποδίζει την απώλεια αυτών, από την μία προστατεύοντας τον χώρο του κινητήρα (ή του πορτ-παγκαζ) από κίνδυνο διαβρώσεων και από την άλλη διατηρώντας τα συστατικά των ηλεκτρολυτών, έτσι κατά συνέπεια αυξάνει την διάρκεια ζωής της μπαταρίας. Το διπλό καπάκι επιτρέπει στην μπαταρία Magis να καλύψει τις υψηλές προδιαγραφές που ορίζει το Roll Over Test, ένα τεστ που δοκιμάζει την ασφάλεια της μπαταρίας κατά την ανατροπή του οχήματος σε περίπτωση ατυχήματος, ένα στοιχείο όπου οι εταιρείες αυτοκινήτων θεωρούν απαραίτητο. Στο τεστ, η μπαταρία τοποθετείται διαγώνια σε κάθε πλευρά και μετά την γυρίζουν ανάποδα για 2 λεπτά όπου κατά το διάστημα αυτό δεν θα πρέπει να υπάρχει καμία διαρροή.
Οι μπαταρίες Magis έχουν πολύ υψηλή απόδοση κατά την διαδικασία εκκίνησης του οχήματος, σε σχέση με μία κλασική μπαταρία, χάρη στον ιδανικό αριθμό πλακών , όλες με ISO/TS 16949, που πιστοποιεί τις μπαταρίες εφάμιλλης ποιότητας με τις γνήσιες και χρησιμοποιώντας την τεχνολογία Flame Arrestor όπου επιτρέπει την απελευθέρωση των αερίων, προστατεύει την μπαταρία από κίνδυνο ανάφλεξης από εξωγενής παράγοντες. Όλες οι μπαταρίες Magis κατασκευάζονται στην Ιταλία με εγγυημένη ποιότητα.

Akumulatory Magis:
Akumulatory Magis są wyposażone w podwójną termozgrzewaną pokrywę labiryntową, która ułatwia odprowadzanie cząsteczek kwasu (gazów) i uniemożliwia im wydostanie się na zewnątrz. Dzięki temu, z jednej strony chroni komorę silnika lub bagażnika przed ryzykiem korozji a z drugiej utrzymuje elektrolit na poziomie wymaganej objętości i gęstości wydłużając tym samym czas życia akumulatora. Zastosowanie podwójnej pokrywy w akumulatorach Magis daje gwarancję pozytywnego wyniku przy przeprowadzaniu tzw. Testu Roll Over wymaganego przez producentów samochodów i uważanego za niezbędny dla zapewnienia bezpieczeństwa w razie wypadku z dachowaniem pojazdu. W testach akumulator jest przechylany na wszystkie boki, a następnie odwracany "do góry nogami" na dwie minuty. W tym czasie nie może nastąpić z akumulatora żaden wyciek. Akumulatory Magis dzieki optymalizacji liczby płyt gwarantują pewny rozruch w porównaniu do standardowych akumulatorów. Wszystkie płyty posiadają certyfikat ISO / TS 16949 oraz są wyposażone w tarczę Flame Arrestor, która pozwala na odprowadzenie gazu i chroni akumulator przed zewnętrznymi iskrami. Wszystkie Akumulatory z serii Magis są produkowane we Włoszech co gwarantuje wysoką jakość i trwałość .

Аккумуляторы Magis:
Аккумуляторы Magis имеют двойную «лабиринтную» крышку, которая обеспечивает рециркуляцию образующихся паров и 100%-ную защиту от вытекания электролита. Таким образом, лабиринтная система крышки позволяет создать полную защиту моторного отсека от коррозии, а также сохранить электролит на требуемом уровне. Все это гарантирует продолжительность срока службы аккумулятора. Использование двойной крышки в аккумуляторах Magis позволяет получить положительные результаты при проведении теста на опрокидывание Roll Over Test (тест проводится автомобильными производителями с целью оценить безопасность автомобиля при аварии с опрокидыванием). В ходе тестирования аккумулятор наклоняют в разные стороны, а потом на две минуты переворачивают вверх дном. Электролит должен оставаться на прежнем уровне.
Благодаря оптимальному числу пластин аккумуляторы Magis имеют лучшие пусковые характеристики по сравнению со стандартными аккумуляторами. Высокое качество аккумуляторов Magis подтверждено сертификатами ISO/TS 16949. Интегрированный в лабиринтную систему крышки пламя гаситель (Flame Arrestor) предотвращает возможность взрыва аккумулятора от внешних источников искрообразования. Аккумуляторы Magis производятся в Италии, что гарантирует их отличное качество.

Tecnologia Pb Ca
La tecnologia Pb Ca delle griglie e le leghe impiegate garantiscono maggiore resistenza all'azione corrosiva dell'elettrolito.
• Manutenzione praticamente azzerata grazie alla minima evaporazione dell'acqua
• Bassa autoscarica, che consente uno stoccaggio o un fermo macchina prolungati
• Maggiore affidabilità e lunga durata.
Coperchio con degasaggio centralizzato, dotato di labirinto, pastiglia integrata rompifiamma e Check Control System per una verifica rapida e semplice del livello dell'elettrolita e dello stato di carica della batteria.
La gamma comprende le batterie ETS DxN, montate in primo equipaggiamento sulle più recenti vetture nazionali.

ETS, grazie alla tecnologia d'avanguardia impiegata, garantisce il massimo di affidabilità attraverso una gamma vasta che copre oltre il 90% del circolante auto, col minimo di manutenzione.
Le batterie ETS sono dotate di originale monocopripolo personalizzato con marchio Magneti Marelli in rilievo.

Pb Ca technology
Pb Ca technology of grids and alloys used assure greater resistance to corrosion from electrolyte.
• Maintenance practically cancelled thanks to minimum water evaporation
• Low self-discharge allowing extended storing or car stop
• Greater reliability and long duration.
Cover with centralized degassing, equipped with labyrinth, built-in flame arrestor and Check Control System for quick and simple check of the electrolyte level and battery charge.

The range includes ETS DxN batteries mounted in first equipment on the newest national cars. thanks to advanced technology employed, assures maximum reliability through a wide range covering over 90%of circulating cars, with minimum maintenance.
RUN batteries are fitted with original single-pole cover personalized with embossed Magneti Marelli logo.

Kalzium-Blei Technologie (Pb Ca)
Die Kalzium-Blei-Technologie (Pb Ca) der eingesetzten Gitter rund Legierungen garantieren höhere Widerstandsfestigkeit gegen die Korrosion der Elektrolyte.
• Die Wartung wird dank der minimalen Verdunstung des Wassers auf ein Minimum begrenzt
• Geringe Selbstentladung ermöglicht eine längere Lagerung und eine längere Standzeit des Fahrzeugs
• Größere Zuverlässigkeit und lange Lebensdauer.
Abdeckung mit Zentralentgasung, ausgestattet mit Labyrinth, eingebautem Rückzündschutz und Check Control System für ein schnelles und einfaches Überprüfen des Elektrolytstands und des Batterieladestands.
Die Reihe umfasst die Batterien ETS DxN, welche auch in der Erstausrüstung der neuesten italienischen Fahrzeuge zum Einsatz kommen.

ETS, dank der eingesetzten fortschrittlichen Technologie, garantiert sie maximale Zuverlässigkeit über eine weitreichende Reihe, welche mehr als 90% des Autoparks abdeckt, und dies bei minimaler Wartung.
Die ETS-Batterien wurden mit einem Original-Poldeckel mit aufgedrucktem Logo Magneti Marelli versehen.

Technologie Pb Ca
La technologie Pb Ca des grilles et les alliages utilisés garantissent une résistance majeure à l'action de corrosion exercée par l'électrolyte.
• Un entretien pratiquement nul avec une très faible évaporation d'eau
• Une faible auto-décharge qui permet un stockage ou un arrêt prolongé de la voiture
• Une plus grande fiabilité et une durée de vie prolongée.
Couvercle à dégazage centralisé, pourvu de labyrinthe, pare-flamme intégré et Check Control System pour une vérification simple et rapide du niveau de l'électrolyte et de l'état de charge de la batterie.
La gamme comprend les batteries ETS DxN, montées en 1er équipement.Couvercle à dégazage centralisé, pourvu de labyrinthe, pare-flamme intégré et Check Control System pour une vérification simple et rapide du niveau de l'électrolyte et de l'état de charge de la batterie.

Grâce à la technologie de pointe utilisée, ETS garantit une fiabilité maximale avec un minimum d'entretien à travers une vaste gamme qui couvre 90% du parc roulant auto.
Les batteries ETS sont pourvues de couvre-cosses d'origine individuels, avec logo Magneti Marelli imprimé en relief

Tecnología PbCa.
La tecnilogía PbCa de los elementos y las aleaciones empleadas garantizan mayor resistencia a la acción corrosiva del electrólito.
• Mantenimiento prácticamente nulo, gracias a la mínima evaporación del agua
• Baja autodescarga, que permite almacenar la batería o parar el vehículo por largo tiempo
• Mayor fiabilidad y larga duración.
Tapa con desgasificación centralizada, con labirinto, pastilla integrada corta flama y Check Control System para una verificación rápida y sencilla del nivel de electrolito y del status de carga de la batería.
La gama comprende las baterías ETS DxN, montadas en la fábrica en los coches nacionales más recientes.

Gracias a la tecnología de punta empleada, las baterías ETS ofrecen la máxima fiabilidad, con una vasta gama que abarca más del 90% del parque circulante, con un mínimo mantenimiento.
Las baterías ETS tienen mono cubrepolos personalizado con la marca Magneti Marelli en relieve.

Tecnologia Pb Ca
A tecnologia Pb Ca das grelhas e as ligas utilizadas garantem uma maior resistência contra a acção corrosiva do electrólito.
• A manutenção é praticamente levada a zero, graças à mínima evaporação da água
• Baixa auto-descarga, que permite uma armazenagem ou uma prolongada parada do veículo
• Maior confiança e longa duração.
Tampa com desgasificação centralizada, dotada de labirinto, pastilha antichama integrada e Check Control System, para uma verificação rápida e simples do nível do eletrólito e da condição de carga da bateria.
A gama compreende as baterias ETS DxN, montadas no primeiro equipamento nos mais recentes veículos nacionais.

Graças à tecnologia de vanguarda utilizada nas baterias ETS, a mesma garante a máxima confiança através de uma ampla gama que abrange acima de 90% dos veículos em circulação, com o mínimo de manutenção.
As baterias ETS são dotadas de uma cobertura de pólo individual original personalizada com a marca Magneti Marelli em relevo

Τεχνολογία Pb Ca
Η Τεχνολογία Pb Ca χρησιμοποιεί μέταλα που είναι ανθεκτικά στην διάβρωση από τους ηλεκτρολύτες.
• Απώλεια διάβρωσης λόγο ελαχιστοποίησης της εξάτμισης του νερού
• Χαμηλή αποφόρτιση σε περίπτωση ακινητοποίησης
• Υψηλή αξιοπιστία και μεγάλη διάρκεια.
Καπάκι με κεντρικό αεραγωγό, εφοδιασμένο με λαβύρινθο, ξεχωριστή και συστήμα ελέγχου για ένα γρήγορο και εύκολο έλεγχο της στάθμης ηλεκτρολύτη και της κατάστασης φόρτισης της μπαταρίας.

Η γκάμα περιλαμβάνει τις μπαταρίες ETS DxN που έχουν πρώτη τοποθέτηση σε πολλά ευρωπαϊκά αυτοκίνητα. Οι ETS, χάρη στην ανεπτυγμένη τεχνολογία που έχουν, εγγυώνται την μέγιστη αξιοπιστία καλύπτοντας το 90% της γκάμας των αυτοκινήτων με την ελάχιστη αποφόρτιση.
Οι μπαταρίες ETS είναι εφοδιασμένες με το γνήσιο κάλυμα πόλων προσωποποιημένο με ανάγλυφο σήμα Magneti Marelli

Technologia Pb Ca
Technologia Pb Ca wykonania krat i zastosowane stopy zapewniają większą odporność na korozyjne oddziaływanie elektrolitu.
• Dzięki minimalnemu odparowaniu wody praktycznie nie wymagają konserwacji
• Niskie samorozładowanie, co umożliwia długie magazynowanie i postoje samochodu
• Większa niezawodność i wyższa trwałość.
Pokrywa labiryntowa z centralnym odgazowywaniem wyposażona w system ochrony przed zapłonem wstecznym oraz magiczne oczko pozwala na szybką i prostą kontrolę poziomu elektrolitu oraz stanu naładowania akumulatora.
Gama obejmuje również akumulatory ETS DxN, montowane na pierwszym montażu w najbardziej popularnych włoskich samochodach.

ETS, dzięki stosowanej awangardowej technologii, zapewnia maksymalną niezawodność, w szerokiej gamie, która pokrywa ponad 90% eksploatowanych samochodów, przy minimum konserwacji.
Akumulatory ETS są wyposażone w jednolite osłony biegunów z wytłoczonym logiem Magneti Marelli

Pb Ca технология
Все пластины изготовлены из сплава свинца и кальция, что гарантирует высокое сопротивление коррозии.
• Отличная эксплуатация благодаря минимальному испарению воды
• Небольшой саморозряд, что позволяет увеличить срок хранения аккумуляторов и уверенно запустить двигатель после длительных простоев автомобиля
• Большая надежность и длительный срок эксплуатации.
Лабиринтная крышка с системой дегазации и встроенным пламя гасителем позволяет быстро и легко проверить уровень электролита и степень заряженности аккумулятора.
Гамма аккумуляторов ETS DxN поставляется на конвейер заводов, которые производят итальянские автомобили.

Благодаря современной технологии аккумуляторы серии ETS гарантируют максимальную надежность и покрытие рынка более чем на 90%.
На клеммах аккумуляторов ETS есть защитная пластиковая крышка, на которой выбит логотип Magneti Marelli.

ES

La gamma comprende batterie con caratteristiche elettriche base e di recente è stata ampliata con batterie dalle caratteristiche elettriche standard ma di applicazione più ampia grazie alle dimensioni compatte (h. 175 cm). La gamma comprende inoltre batterie per applicazioni asiatiche.Tutte le ES sono vendute cariche pronte all'uso e garantiscono partenze sempre affidabili.

The range includes batteries with basic electrical characteristics, and was recently expanded to include low batteries with standard electrical characteristics but wider application thanks to their reduced size (h 175). All ES batteries are sold fully charged and ready for use, and always ensure reliable start-ups .

Die Produktreihe umfasst Batterien mit grundlegenden elektrischen Eigenschaften und wurde erst vor kurzem erweitert, um Flachbatterien einzuschließen, die über die elektrischen Standardeigenschaften verfügen, jedoch dank ihrer geringen Größe (H 175) eine breitere Anwendung finden. Die Produktreihe umfasst außerdem Batterien für einen Einsatz in asiatischen Fahrzeugen. Alle ES-Batterien werden vollständig geladen und einsatzbereit verkauft und garantieren einen verlässlichen Start in jedem Moment.

La gamme comprend des batteries à caractéristiques électriques de base, récemment complétées de batteries basses à caractéristiques électriques standard mais à champ d'application plus étendu grâce à leur taille réduite (H 175). La gamme comprend des batteries principalement destinées au parc roulant asiatique.
Toutes les batteries ES sont vendues chargées et prêtes à l'emploi. Elles garantissent un démarrage toujours fiable.
Des batteries classiques principalement utilisées sur les véhicules des constructeurs asiatiques.Toutes les batteries ES sont fournies chargées, prêtes à l'usage et garantissent toujours des démarrages fiables.

La gama está constituida por baterías con características eléctricas base, y hace poco, ha sido ampliada con baterías bajas con características eléctricas estándar pero con gama de aplicaciones más amplias gracias a las medidas compactas (h 175). La gama comprende principalmente baterías para el parque circulante asiático.La gama incluye, también, baterías para aplicaciones asiáticas.Todas las ES están comercializadas con carga listas para utilizar y garantizan arranques siempre seguros.

A linha abrange baterias com características elétricas básicas e, recentemente, foi ampliada com baterias baixas com características elétricas padrão, mas com aplicação mais ampla graças às dimensões compactas (h. 175). Além disso, a linha inclui baterias para aplicações asiáticas.Todas as baterias ES são vendidas carregadas e prontas para uso, e garantem partidas sempre confiáveis.

Η σειρά περιλαμβάνει μπαταρίες με βασικά ηλεκτρικά χαρακτηριστικά και εκ νέου επεκτάθηκε με μπαταρίες χαμηλότερες από τα χαρακτηριστικά ηλεκτρικά στάνταρ αλλά ευρύτερης εφαρμογής, κυρίως λόγω συμπαγούς μεγέθους (h. 175). Η γκάμα περιλαμβάνει κυρίως μπαταρίες για Ασιατικά αυτοκίνητα. Όλες οι μπαταρίες ES είναι έτοιμες για χρήση κατά την αγορά. Οι κανονικές μπαταρίες χρησιμοποιούνται κυρίως σε οχήματα Ασιατικής κατασκευής

Gama zawiera akumulatory o podstawowych parametrach elektrycznych. Dzieki niedawnemu uzupelnieniu jej o akumulatory niskie (wys.175mm), zapewnia szersze możliwości zastosowań. Gama zawiera również akumulatory do samochodów azjatyckich Wszystkie akumulatory ES są sprzedawane w stanie naładowanym, gotowe do użycia, zapewniające niezawodny rozruch w każdych warunkach

Гамма включает аккумуляторы, которые имеют базовые электрические характеристики. Недавно эта гамма пополнилась небольшими по размеру аккумуляторами (высота 175 мм), что позволяет расширить область применения.
Гамма включает аккумуляторы, которые предназначены для азиатских автомобилей.
Все аккумуляторы серии ES продаются заряженными, готовыми к использованию, что гарантирует надежный запуск. Стандартные аккумуляторы используются, как правило, в автомобилях азиатского производства.Гамма также включает аккумуляторы, которые предназначены для азиатских марок автомобилей

LA NUOVA SFIDA AL BISOGNO DI ENERGIA

Il coperchio delle batterie RUN e ETS

È utilizzato dalle maggiori case automobilistiche internazionali: garanzia di elevati standard qualitativi e massima affidabilità.

Degasaggio Centralizzato
Un sistema di convogliamento sicuro dei gas salvaguarda le componenti del vano motore dal rischio di corrosione acida.

Pastiglia rompifiamma
La pastiglia integrata all'interno del coperchio posizionata nel punto di uscita dei gas, evita i rischi di ritorni di fiamma e di esplosioni.

Labirinto
Minimizza la fuoriuscita di particelle di acido proteggendo il vano motore o il bagagliaio dal rischio di corrosioni e consente di mantenere più a lungo la riserva di elettrolito.

Check Control System
Per una verifica rapida e semplice del livello dell'elettrolita e dello stato di carica della batteria. "Le batterie ETS sono dotate di originale monocopripolo personalizzato con marchio Magneti Marelli in rilievo".

THE NEW CHALLENGE TO ENERGY NEED

Cover of RUN and ETS batteries

It is used by the greatest international automotive firms: this is a guarantee of high quality standards and maximum reliability.

Centralised Degasing
A safe gas conveying system protects engine opening components from acid corrosion.

Flame trap pad
The integrated pad inside the cover, that is positioned at gas outlet, prevents risks from backfire and explosion.

Labyrinth
The labyrinth minimises acid particles leaks, so protecting from corrosion the engine compartment or the luggage compartment and allowing to preserve electrolyte supply for a longer time.

Check Control System
For fast and simple check of electrolyte level and battery charge status.
Cover exact and functional design provides ETS and RUN batteries with a quite technological appearance.

DIE NEUE HERAUSFORDERUNG DES ENERGIEBEDARFS

Der Deckel der Batterien RUN und ETS

Dieser wird von der Mehrzahl der internationalen Automobilhersteller eingesetzt: Garantie für höhere Qualitätsstandards und maximale Zuverlässigkeit.

Zentrale Gasableitung
Ein sicheres Leitsystem der Gase schützt die Bauteile im Motorraum vor Säurekorrosion.

Belag für den Rückzündschutz
Die intern im Deckel eingelassenen Beläge, welche sich an der Gasaustrittsöffnung befinden, verhindern einen Rücklauf der Flamme und Explosionen.

Labyrinth
Reduziert den Austritt von Säurepartikeln und schützt den Motorraum bzw. den Kofferraum vor Korrosionsrisiken und ermöglicht eine lange Lebensdauer der Elektrolyte.

Check Control System
Für eine schnelle und einfache Kontrolle des Elektrolytniveaus und des Ladezustandes der Batterie.
Das rigorose und funktionelle Design des Deckels verleiht den Batterien ETS und RUN ein echtes technologisches Image.

THE NEW CHALLENGE TO ENERGY NEED

Le couvercle des batteries RUN et ETS

Utilisé par les principaux constructeurs automobiles internationaux, il garantit des standards de qualité élevé et une fiabilité maximale.

Dégazage centralisé :
Un système sûr d'évacuation du gaz protège les composants du compartiment moteur du risque de corrosion acide.

Système Anti-retour de flamme :
Intégré dans le couvercle et situé au point de sortie des gaz, il évite tout risque de retour de flamme et d'explosion.

Labyrinthe :
Il minimise l'écoulement de particules d'acide, protégeant le compartiment moteur ou le coffre du risque de corrosion et permet de conserver plus longtemps la réserve d'électrolyte.

Système Check Control :
Permet de contrôler vite et simplement le niveau d'électrolyte et l'état de charge de la batterie.
Le design rigoureux et fonctionnel du couvercle donne aux batteries ETS et RUN une image hautement technologique.

THE NEW CHALLENGE TO ENERGY NEED

La tapa de las baterías RUN y ETS

La utilizan las mayores Casas automovilísticas internacionales, entre las cuales por ser garantía de un elevado estándar cualitativo y máxima fiabilidad.

Desgasificación centralizada
Un sistema de canalización segura de los gases protege las piezas del compartimiento del motor contra el riesgo de corrosión ácida.

Plaquitas antillama
La plaquita integrada en el interior de la tapa, en el punto de salida de los gases, previene el riesgo de retorno de llama y de explosiones.

Laberinto
Reduce al mínimo la salida de partículas de ácido, protegiendo el compartimiento del motor o el maletero contra el riesgo de corrosión y manteniendo por más tiempo la reserva de electrólito.

Check Control System
Para comprobar rápida y fácilmente el nivel del electrólito y la carga de la batería.
Gracias al diseño preciso y práctico de la tapa, las baterías ETS y RUN tienen un aspecto sumamente tecnológico.

THE NEW CHALLENGE TO ENERGY NEED

A tampa das baterias RUN e ETS

É utilizada pelas maiores casas automobilísticas internacionais: garantia de altos standards qualitativos e máxima confiança.

Desgasificação Centralizada
Um sistema de transporte seguro dos gases, protege os componentes do vão motor contra o risco de corrosão ácida.

Pastilha quebra-chama
A pastilha integrada no interior da tampa posicionada no ponto de saída dos gases evita os riscos de retornos de chama e de explosões.

Labirinto
Minimiza a saída de partículas de ácido protegendo o vão motor ou a bagageira contra o risco de corrosões e permite de manter por mais tempo a reserva de electrólito.

Check Control System
Para uma verificação rápida e simples do nível do electrólito e da condição de carga da bateria.
O design rigoroso e funcional da tampa doa uma imagem decididamente tecnológica as baterias ETS e RUN.

THE NEW CHALLENGE TO ENERGY NEED

Καλύπτεται από τις μπαταρίες RUN και ETS.

Χρησιμοποιείται σαν 1η εφαρμογή από τους μεγαλύτερους κατασκευστές αυτοκινήτου: αυτό είναι και η εγγύηση της ποιότητας και της αξιοπιστίας που τις διακατέχει. Στοχευμένη εξαέρωση. Ένα ασφαλές σύστημα εξάτμισης των αερίων προστατεύει τα εξαρτήματα της μηχανής από τις διαυρώσεις. Πυροπροστατευτικά υλικά. Τα υλικά που βρίσκονται στο εσωτερικό μειώνουν το ρίσκο φωτιάς και εκρήξεων. Λαβύρινθος. Η αρχιτεκτονική κατασκεύη της μπαταρίας μειώνει τις διαρροές οξέων, έτσι προστατεύται το εσωτερικό της μηχανής ή ο χώρος στον οποίο αποθηκεύονται ενώ παράλληλα επιτυγχάνεται η μέγιστη διάρκεια ζωής της

THE NEW CHALLENGE TO ENERGY NEED

Pokrywa akumulatorów RUN i ETS

Jest używana przez największych międzynarodowych producentów samochodów: gwarancja wysokich standardów jakościowych i maksymalnej niezawodności.

Centralne odgazowanie
System bezpiecznego odprowadzenia gazu chroni komponenty komory silnika przed ryzykiem kwaśnej korozji.

Pastylka przerywająca płomień
Pastylka wbudowana w wewnątrz pokrywy, umieszczona w punkcie wyjścia gazu, eliminuje ryzyko powrotu płomienia i eksplozji.

Labirynt
Minimalizuje wydostawanie się cząstek kwasu chroniąc komorę silnika lub bagażnik przed zagrożeniem korozją i umożliwia dłuższe zachowanie rezerwy elektrolitu.

Check Control System
Służy do szybkiej i prostej kontroli poziomu elektrolitu i stanu naładowania akumulatora.
Skromny i funkcjonalny design pokrywy nadaje akumulatorom ETS i RUN zdecydowanie technologiczny wygląd.

THE NEW CHALLENGE TO ENERGY NEED

Крышка аккумуляторов серии RUN и ETS

Используется крупными международными автомобильными компаниями, что является гарантией высокого качества и максимальной надежности.

Центральный газоотвод
Безопасная система подачи газа защищает элементы двигателя от кислотной коррозии.

Система защиты от проникновения искры внутрь
Клапан находится всередине крышки, в точке выхода газа, и снижает риск возгорания и взрыва.

Крышка с лабиринтными камерами
Обеспечивает сохранение постоянного уровня электролита, снижает испарение воды. Исключается коррозия вокруг места установки аккумулятора.

Система контроля уровня зарядки
Предназначена для быстрой и простой проверки уровня электролита и степени заряженности аккумулятора.
Точный и функциональный дизайн корпуса создает аккумуляторам серии ETS и RUN хороший имидж .

Batterie che garantiscono il massimo della sicurezza all'avviamento e affidabilità nel tempo
Buona resistenza al ciclaggio ed alle vibrazioni:
• Piastre a spessore ottimizzato
• Separatori altamente performanti
• Sistema di fissaggio dei gruppi piastre alle pareti delle celle
• Hot-melt, speciale sostanza viscosa per il fissaggio del gruppo piastre

Ridotta manutenzione ridotta autoscarica ridotto consumo d'acqua:
• Tecnologia ibrida, piastra negativa in Pb/Ca (Piombo/Calcio), piastra positiva a basso contenuto di Antimonio (Pb/Sb)
• Elevata purezza delle materie prime impiegate
Disponibili sia in versione carica pronta all'uso che carica secca

CARGO è la gamma di batterie per camion e trattore studiata per resistere a forti sollecitazioni meccaniche e cicliche, e garantire potenza all'avviamento e massima durata.
La gamma CARGO Magneti Marelli è composta di batterie di qualità aftermarket e batterie identiche all'originale.

Batteries assure maximum safety at start-up and reliability over time
Excellent resistance to cycling and vibrations:
• Plates with optimised thickness
• High performance separators
• System to fix assemblies to cell walls
• Hot-melt, special viscous substance to fix plates assembly

Reduced maintenance reduced self-discharging reduced water consumption:
• Hybrid technology, negative plate made of Pb/Ca (Lead/Calcium), positive plate with low Antimony content (Pb/Sb)
• High purity of raw materials employed
Available in both ready-to-use charge and dry charge versions

CARGO is a battery range for truck and tractor designed to stand strong mechanical and cyclic strains, and assure power at start-up, as well as maximum duration.
The Magneti Marelli CARGO range features after-market quality batteries and batteries identical to the original.

Batterien, welche beim Start maximale Sicherheit bieten und dauerhaft zuverlässig sind
Gute Widerstandsfestigkeit gegen Zyklen und Vibrationen:
• Platten mit optimierter Stärke
• Hochleistungstrennplatten
• Befestigungssystem der Plattengruppen an den Zellenwänden
• Hot-Melt, spezielle Viskosesubstanz für die Befestigung der Plattengruppen

Geringer Wartungsbedarf geringe Selbstentladung geringer Wasserverbrauch:
• Hybridtechnologie, negative Platte aus Pb/Ca (Blei/Kalzium), positive Platte mit geringem Anteil an Antimon (Pb/Sb)
• Hohe Reinheit der eingesetzten Grundmaterialien
Erhältlich sowohl in der Version gebrauchsfertig vorgeladen und mit Trockenladung.

CARGO ist die Batteriereihe für Nutzfahrzeuge und Traktoren, welche speziell dazu entwickelt worden ist, starker mechanischer und zyklischer Beanspruchung zu widerstehen, und garantiert Leistung beim Start und maximale Lebensdauer.
Die Magneti Marelli CARGO Produktreihe umfasst Aftermarket-Qualitätsbatterien und originalgetreue Batterien.

Des batteries qui garantissent le maximum de sécurité au démarrage et de fiabilité au fil du temps
Bonne résistance aux cycles et aux vibrations :
• Plaques d'épaisseur optimisée
• Séparateurs extrêmement performants
• Système de fixation des groupes plaques aux parois des éléments
• Hot-melt, substance visqueuse spécialement prévue pour la fixation des groupes plaques.

Entretien réduit autodécharge réduite consommation d'eau réduite
• Technologie hybride, plaque cathode en Pb/Ca (Plomb/Calcium), plaque anode à faible contenu d'Antimoine (Pb/Sb)
• Extrême pureté des matières premières utilisées
Disponibles en version chargée prête à l'emploi et en version chargée sèche.

CARGO est la gamme de batteries pour camion et tracteur conçue pour résister à de fortes sollicitations mécaniques et cycliques. CARGO garanti puissance au démarrage et durée de vie maximum.
La gamme CARGO Magneti Marelli se compose de batteries de qualité Aftermarket et de batteries identiques au modèle d'origine

Baterías que garantizan una puesta en marcha segura y máxima fiabilidad a lo largo del tiempo
Buena resistencia al ciclaje y a las vibraciones:
• El mejor espesor de las placas.
• Separadores de elevado rendimiento.
• Sistema de fijación de los grupos de placas a las paredes de las celdas.
• Holt-melt, substancia viscosa especial para la fijación del grupo de placas.
Menos mantenimiento, menos autodescarga, menor consumo de agua:
• Tecnología híbrida, placa negativa de Pb/Ca (Plomo/Calcio), placa positiva con bajo contenido de Antimonio (Pb/Sb).
• Elevada pureza de las materias primas utilizadas

Disponibles tanto en versión cargada lista para el uso como en versión de carga seca CARGO es la gama de baterías para camiones y tractores estudiada para resistir a elevados esfuerzos mecánicos y cíclicos, garantizando potencia para el arranque y máxima duración.
La gama CARGO Magneti Marelli está constituida por baterías de calidad aftermarket e idénticas a las de primer equipo.

Baterias que garantem o máximo da segurança no arranque e confiança no tempo
Boa resistência ao ciclo da bateria e as vibrações:
• Chapas de espessura optimizada
• Separadores de alta performance
• Sistema de fixação dos grupos chapas nas paredes das células
• Hot-melt, especial substância viscosa para a fixação do grupo das chapas

Reduzida manutenção reduzida auto-descarga reduzido consumo de água:
• Tecnologia híbrida, chapa negativa em Pb/Ca (Chumbo/Cálcio), chapa positiva com baixo conteúdo de Antimónio (Pb/Sb)
• Alta pureza das matérias primárias utilizadas

Disponíveis seja na versão carregada pronta para o uso que carregada seca CARGO é a gama de baterias para camiões e tractores estudada para resistir a fortes solicitações mecânicas e cíclicas, e garantir potência no arranque e a máxima duração.
A linha CARGO da Magneti Marelli é composta por baterias de qualidade para o mercado de reposição e baterias idênticas às originais.

Μπαταρίες που εγγυόνται μέγιστη ασφάλεια κατά την εκκίνηση και αξιοπίστια στον χρονο.
Ενισχυμένη ανθεκτικότητα στις μετακινήσεις και τις δονήσεις.
• Πόλοι ισχυρού πάχους
• Υψηλής ποιότητας διαχωριστικά
• Σύστημα αυτορύθμισης των κελιών
• Ειδικό κολλώδες υλικο για την εφαρμογή των πόλων

Χαμηλή συντήρηση χαμηλή αποφόρτιση χαμηλή εξάτμιση χαμηλή κατανάλωση νερού:
• Υβριδική τεχνολογία, ο αρνητικός πόλος κατασκευάζεται από Pb/Ca (Lead/Calcium), ο θετικός πόλος κατασκευάζεται από υλικά με Αντιμόνιο (Pb/Sb)
• Υψηλή ποιότητα υλικών
Διατίθεται προς χρήση κατά την στιγμή της αγοράς, κανονικής ή ξηρής φόρτισης.

Η CARGO είναι μια μπαταρία ειδικά για φορτηγά και τρακτέρ, κατασκευασμένη για σκληρή χρήση και εξασφαλίζει δύναμη κατά την εκκίνηση και μέγιστη διάρκεια ζωής.
Η CARGO είναι μια μπαταρία ειδικά για φορτηγά και τρακτέρ, κατασκευασμένη για σκληρή χρήση και εξασφαλίζει δύναμη κατά την εκκίνηση και μέγιστη διάρκεια ζωής.

Akumulatory, które dają maksimum pewności przy rozruchu i gwarantują niezawodność w czasie
Dobra wytrzymałość na cykle ładowania i rozładowania oraz na drgania:
• Płyty o zoptymalizowanej grubości
• Separatory o wysokich osiągach
• System mocowania zespołów płyt do ścianek komór
• Hot-melt, specjalna lepka substancja do mocowania zespołów płyt

Mniejsza konserwacja mniejsze samorozładowanie mniejsze zużycie wody:
• Technologia hybrydowa, płyta ujemna z Pb/Ca (Ołów/Wapń), płyta dodatnia o niskiej zawartości antymonu (Pb/Sb)
• Wysoka czystość stosowanych surowców
Dostępne tak w wersji gotowej do użytku jak i suchoładowane

CARGO jest to gama akumulatorów dla samochodów ciężarowych i traktorów, przystosowana do tolerowania dużych obciążeń mechanicznych i cyklicznych, gwarantująca dużą moc rozruchową i maksymalną trwałość.
Gama CARGO Magneti Marelli składa się z akumulatorów stanowiących zamienniki do oryginałów jak i akumulatorów o jakości identycznej jak oryginalne, pierwszomontażowe.

Аккумуляторы гарантируют максимальную безопасность при запуске и надежность во время работы
Чрезвычайная устойчивость к вибрациям и циклическим нагрузкам:
• Оптимальная толщина пластин
• Наличие сепараторов, которые защищают электрод от замыкания, чем значительно увеличивают срок эксплуатации
• Система крепления пластин к стенкам ячеек
• Hot-melt, специальное вязкое вещество, которое позволяет хорошо зафиксировать пластины

Незначительное обслуживание, небольшая саморозрядка, небольшое потребление воды:
• Гибридная технология, пластина отрицательной полярности изготовлена из Pb/Ca (Свинец/Кальций), пластина положительной полярности - с незначительным содержанием сурьмы (Pb/Sb)
• Высокая чистота материалов, которые используются при производстве аккумуляторов

Доступные как готовые к использованию аккумуляторы, так и сухие заряженные CARGO - это аккумуляторы для грузовых автомобилей и тракторов, которые разработаны для того, чтобы выдерживать сильные механические и циклические нагрузки. Гарантируют надежный запуск и максимальный срок службы.
Гамма аккумуляторов Magneti Marelli CARGO отвечает всем требованиям вторичного рынка, а их качество сопоставимо с оригиналом.

MAGNETI MARELLI

Gamma
Range
Reihe
Gamme
Gama
Gama
Υκάμα
Gama
Гамма

Short / Code / DIN	Ah	A (EN)	Type	Base connection	
12 V - START					
AGM70D 067107076010	70	760	1	B13	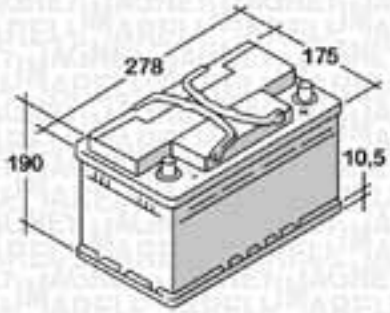
AGM80D 067108080010	80	800	1	B13	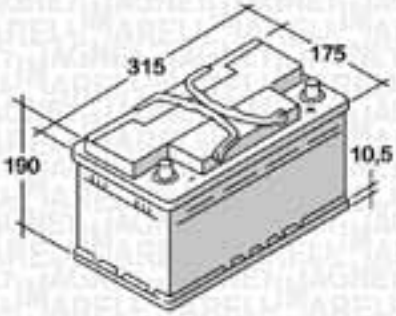
AGM90D 067109090010	90	900	1	B13	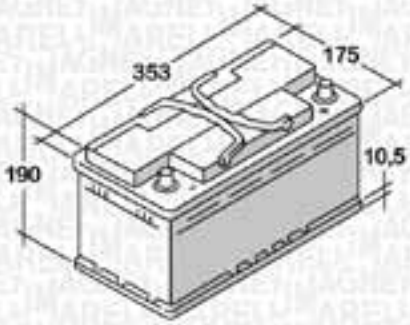
SST63D 067106345010	63	450	1	B13	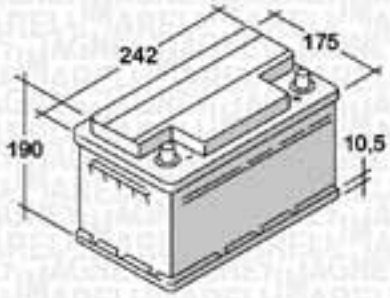
SST72D 067107257010	72	570	1	B13	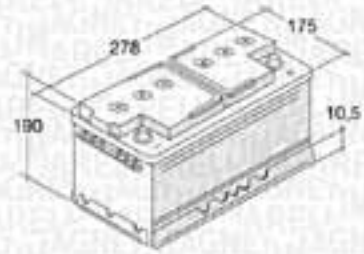

Short / Code / DIN	Ah	A (EN)	Type	Base connection	
12 VOLT - RUN					
RUN44D 068044039010	44	390	1	B13	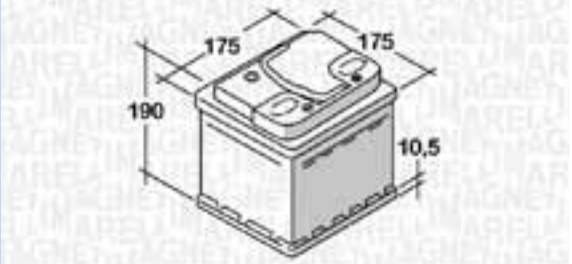
RUN50D 068050051010	50	510	1	B13	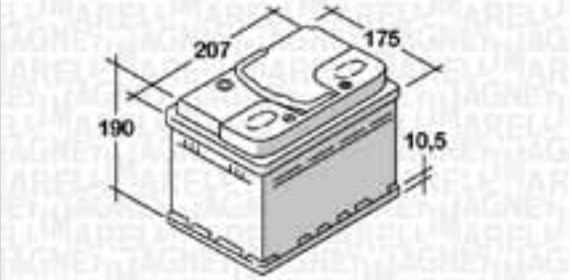
RUN62D 068062064010 56219	62	640	1	B13	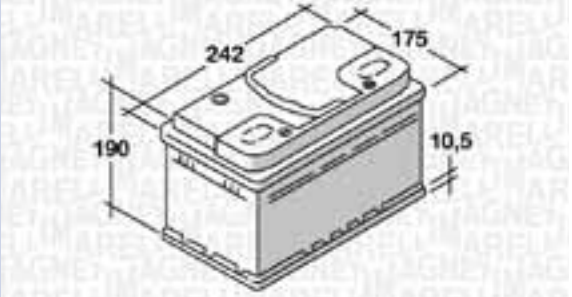
RUN72D 068072072010 57412	72	720	1	B13	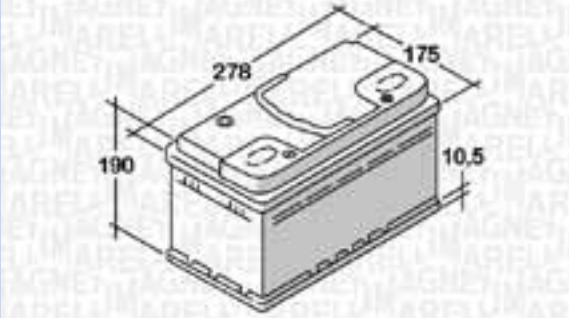
RUN95D 068095085010 59219	95	850	1	B13	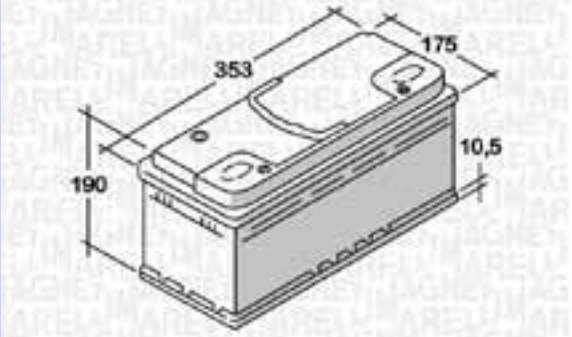

Short / Code / DIN	Ah	A (EN)	Type	Base connection	
12 V - MAGIS					
MAG44DB 069044045030	44	450	1	B13	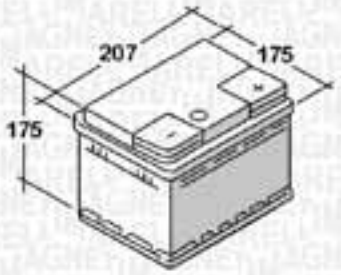
MAG45D 069045039010	45	390	1	B13	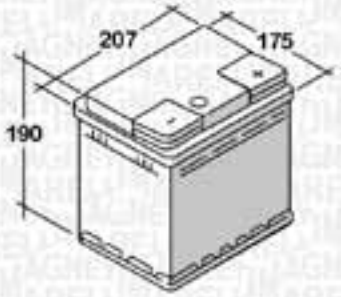
MAG50D 069050045010	50	450	1	B13	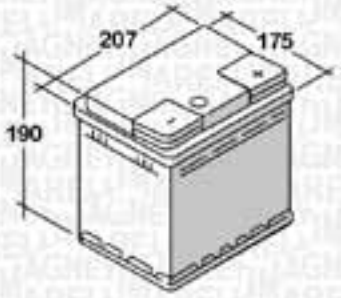
MAG62D 069062054010	62	540	1	B13	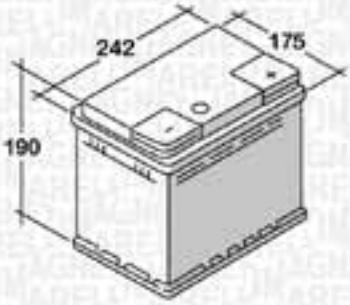
MAG62DB 069062064030	62	640	1	B13	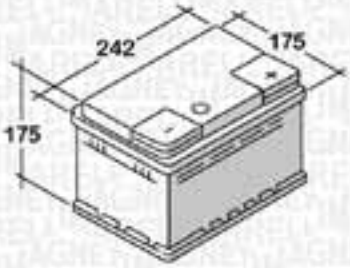

Short / Code / DIN	Ah	A (EN)	Type	Base connection	
12 V - MAGIS					
MAG74D 069074068010	74	680	1	B13	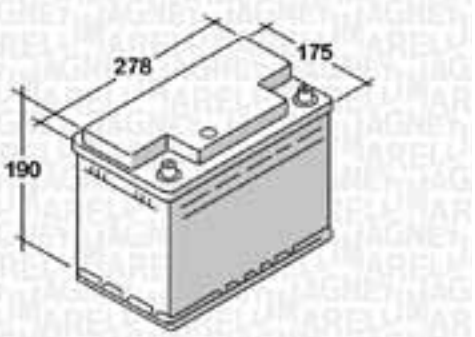
MAG72DB 069072072030	72	720	1	B13	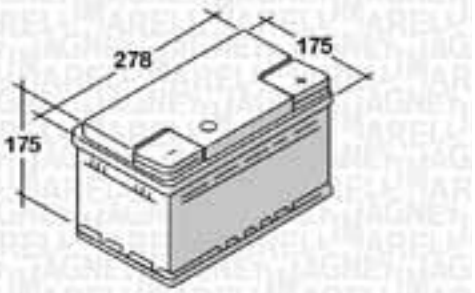
MAG82DB 069082076010	82	760	1	B13	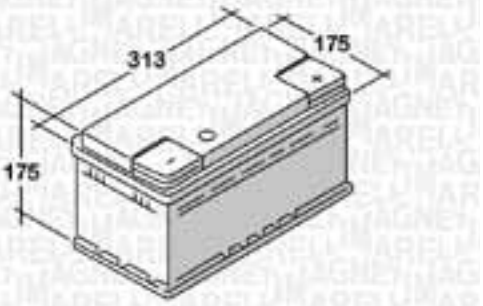
MAG88D 069088076030	88	760	1	B13	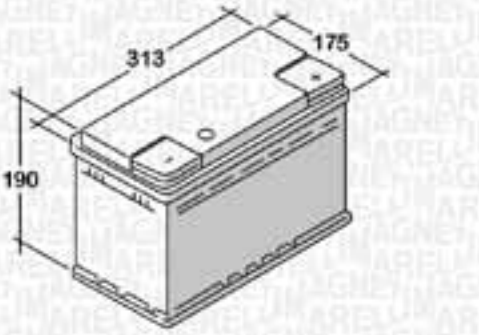
MAG100D 069100080010	100	800	1	B13	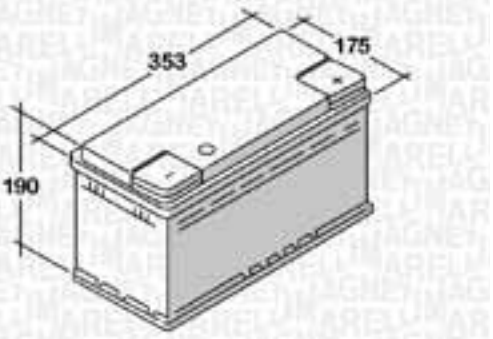

Short / Code / DIN	Ah	A (EN)	Type	Base connection	
12 V - ETS					
ETS40D1N 067129011003	40	300 / 200 (IEC)	1	B03	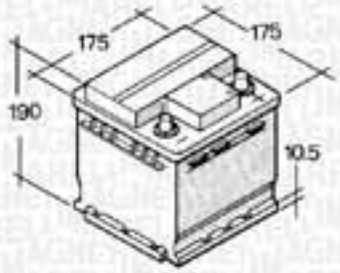
ETS44D2N 067129012003	44	/ 250 (IEC)	1	B03	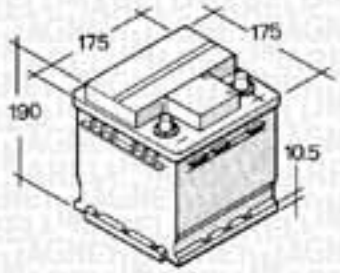
ETS44NDB 068044042030 54465	44	420	1	B13	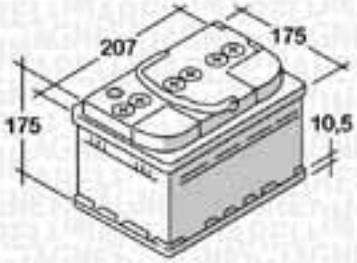
ETS45ND 068045036010 54459	45	360	1	B13	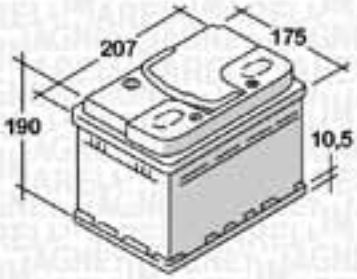
ETS40NS 068040033020 54464	40	330	1	B13	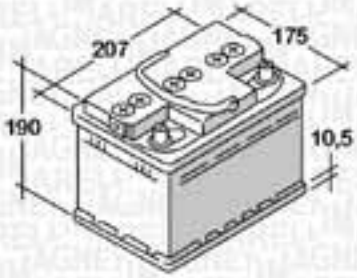

Short / Code / DIN	Ah	A (EN)	Type	Base connection	
12 V - ETS					
ETS50D3N 067143613003	50	360 / 250 (IEC)	1	B13	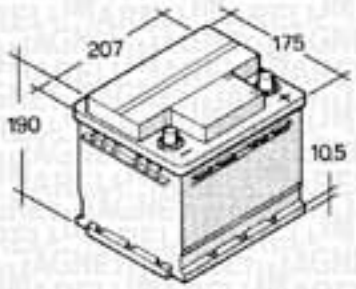
ETS50ND 068050045010	50	450	1	B13	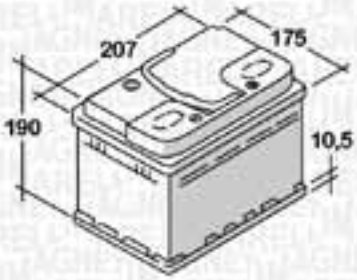
ETS50D4N 067143614003	50	/ 350 (IEC)	1	B13	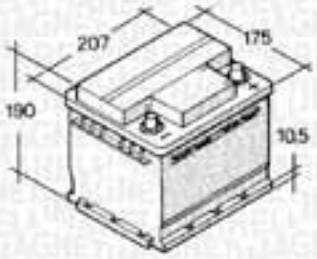
ETS50NDB 068050051030 55048	50	510	1	B13	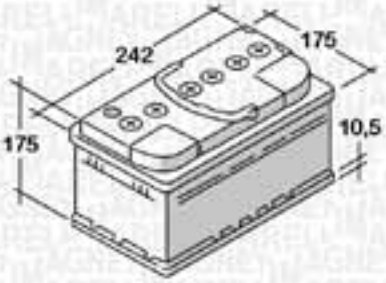
ETS60D4N 067129000003	60	/ 400 (IEC)	1	B13	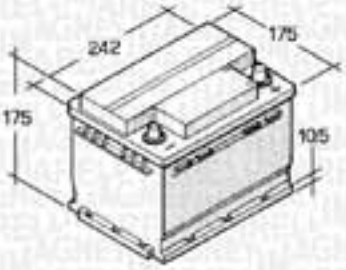

Short / Code / DIN	Ah	A (EN)	Type	Base connection	
12 V - ETS					
ETS60NDB 068060060030 56077	60	600	1	B13	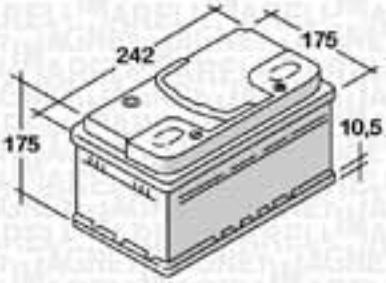
ETS62ND 068062054010 56219	62	540	1	B13	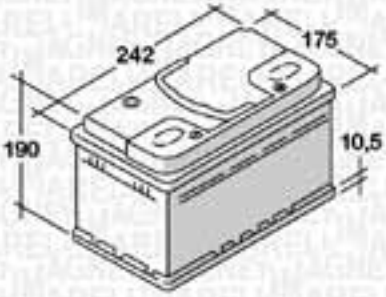
ETS60D3N 067143813003	60	540 / 380 (IEC)	1	B13	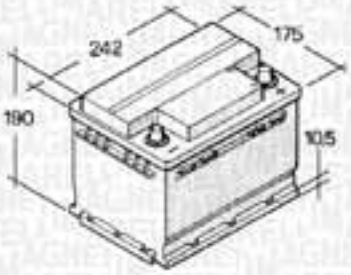
ETS55NS 068055048020 55565	55	480	1	B13	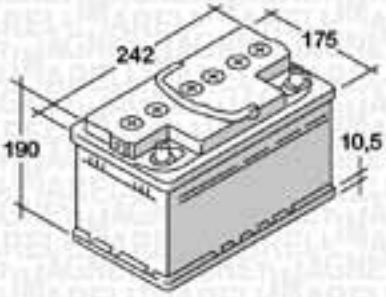
ETS65NDB 068065054030 56530	65	540	1	B13	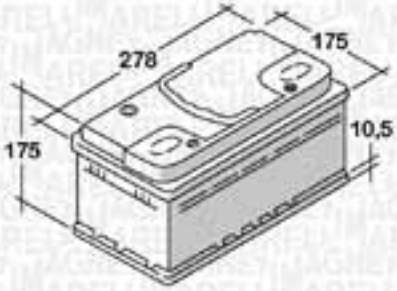

Short / Code / DIN	Ah	A (EN)	Type	Base connection	
12 V - ETS					
ETS70D1N 067147610003	70	/ 450 (IEC)	1	B1	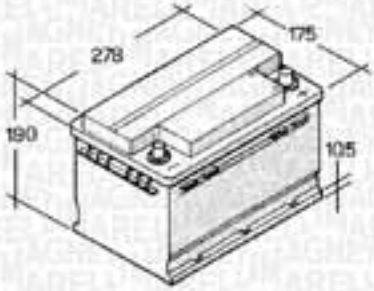
ETS71NDB 068071068030 57113	71	680	1	B13	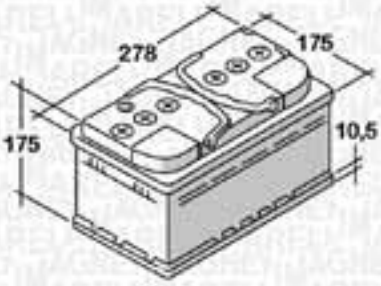
ETS74ND 068074068010 57412	74	680	1	B13	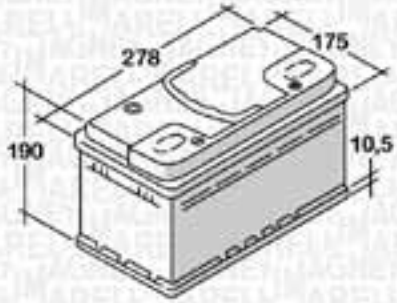
ETS74DI 067100046780	74	680	1	B03	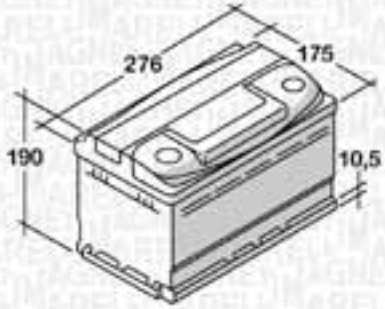
ETS63NS 068063057020 56633	63	570	1	B13	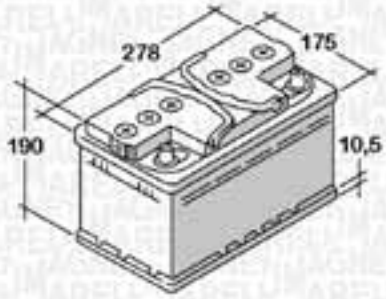

Short / Code / DIN	Ah	A (EN)	Type	Base connection	
12 V - ETS					
ETS80ND 068080060010 58211	80	600	1	B13	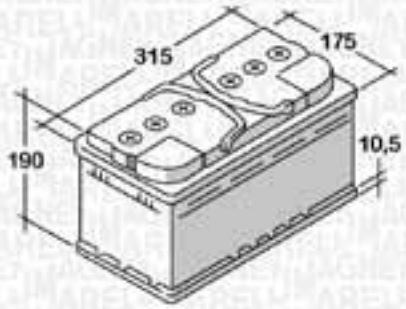
ETS85NDB 068085072030 58515	85	720	1	B13	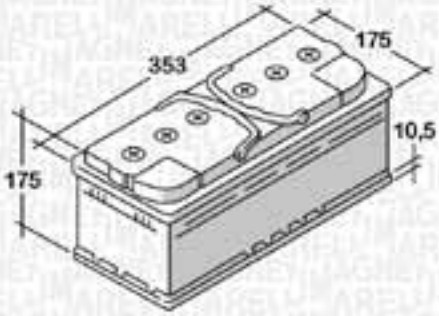
ETS88D1N 067154200003	88	/ 580 (IEC)	1	B13	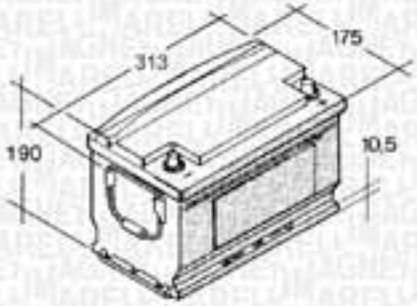
ETS90D1N 067145210003	90	/ 440 (IEC)	1	B13	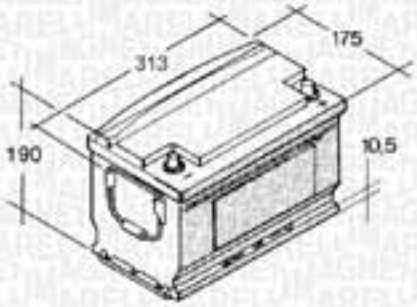
ETS92ND 068092076010 59219	92	760	1	B13	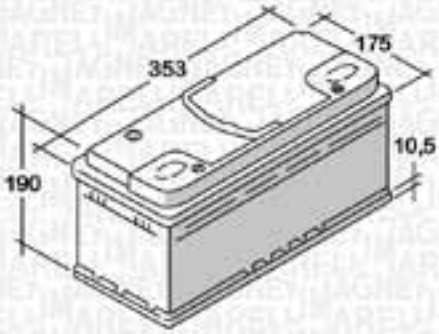

Short / Code / DIN	Ah	A (EN)	Type	Base connection	
12 V - ETS					
ETS95DI 067100023280	95	800 450 (IEC)	1	B03	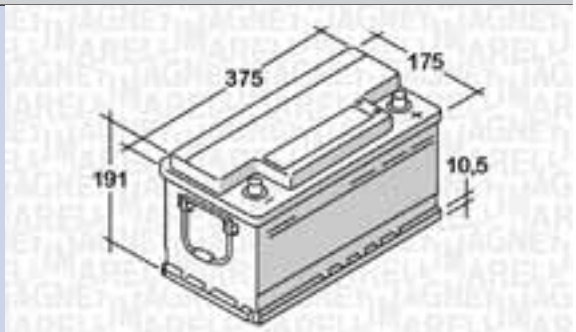
ETS95D1N 068095068010 59219	95	680	1	B13	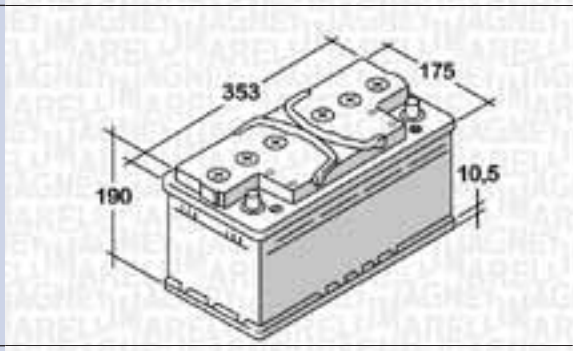
ETS100KD 067145240003	100	720	1	B03	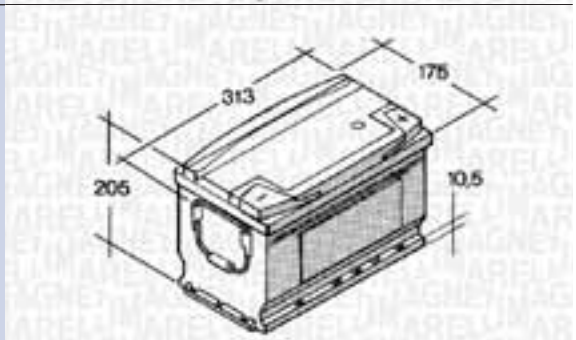
ETS100ND 068100072010 60032	100	720	1	B03	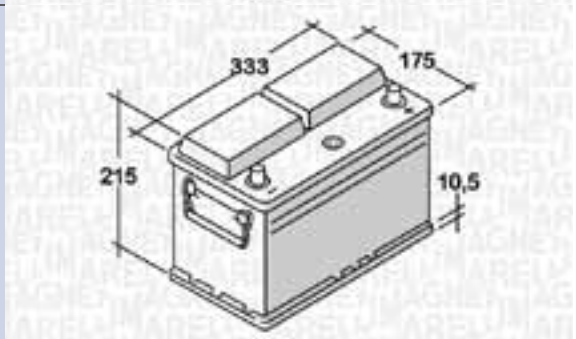
ETS100D2N 067145211003	100	750 / 470 (IEC)	1	B13	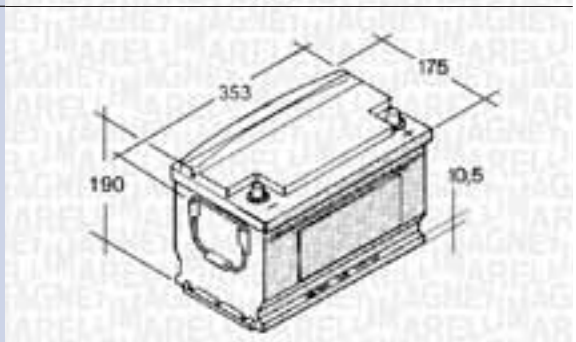

Short / Code / DIN	Ah	A (EN)	Type	Base connection	
12 V - ETS					
ETS100D1N 067143410003	100	1050 / 650 (IEC)	1	B13	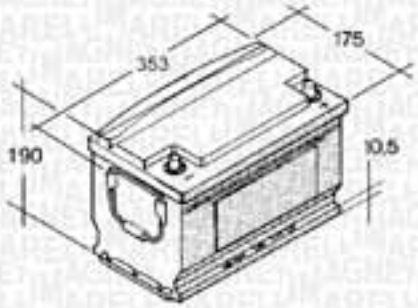
ETS110D1N 068110095010	110	950	1	B13	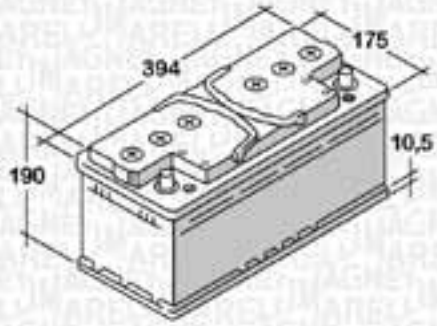
12 VOLT - ES					
ES35240DJ 068035024050 53520	35	240	3	B00	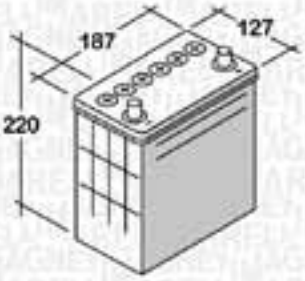
ES35240DJ1 068035024070	35	240	3	B01	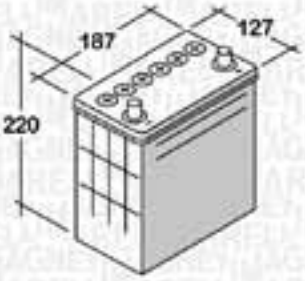
ES35240SJ 068035024060 53522	35	240	3	B00	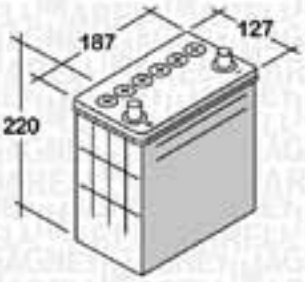

Short / Code / DIN	Ah	A (EN)	Type	Base connection	
12 VOLT - ES					
ES40320D 068040032010 54059	40	320	1	B13	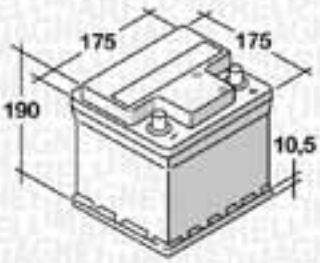
436210ES 067143650002	45	360	1	B3	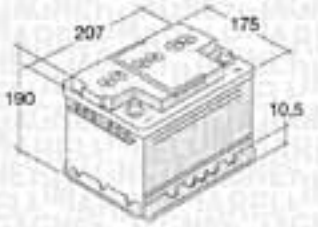
ES45NDB 068345036030	45	360	1	B3	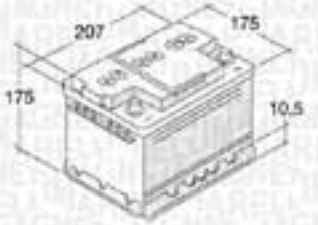
ES45300D 068045030010 54523	45	300	1	B00	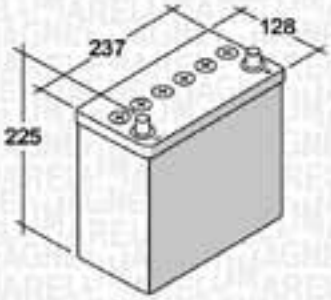
ES45300S 068045030020 54524	45	300	1	B00	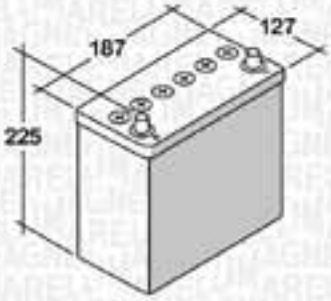

Short / Code / DIN	Ah	A (EN)	Type	Base connection	
12 VOLT - ES					
ES45300DJ 068045030050 54584	45	300	3	B00	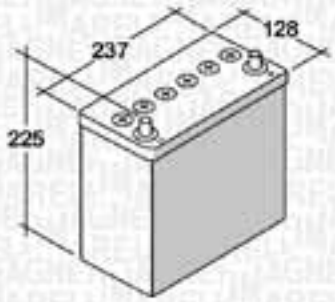
ES45300SJ 068045030060 54551	45	300	3	B00	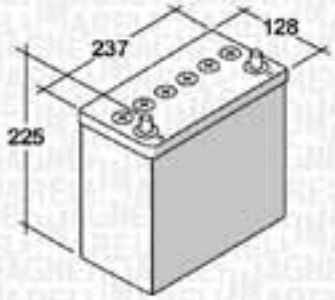
ES45330D 068045033010 54577	45	330	1	B01	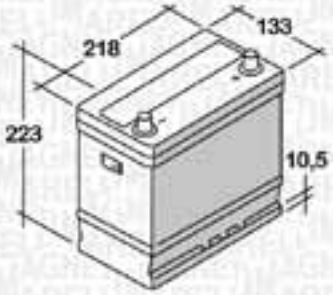
ES45330S 068045033020 54579	45	330	1	B01	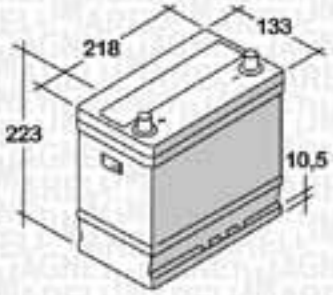
438320ES 067143808002	60	540	1	B3	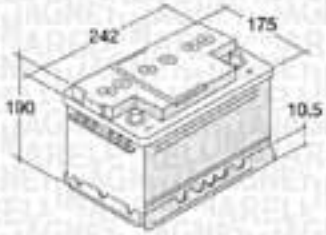

Short / Code / DIN	Ah	A (EN)	Type	Base connection	
12 VOLT - ES					
ES60NDB 068360051030	60	510	1	B3	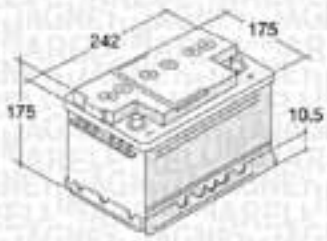
ES70540D 068070054010 57029	70	540	1	B07/B12	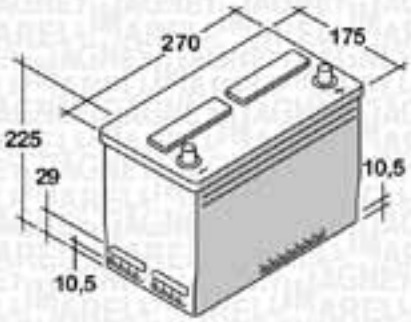
ES70540S 068070054020 57024	70	540	1	B07/B12	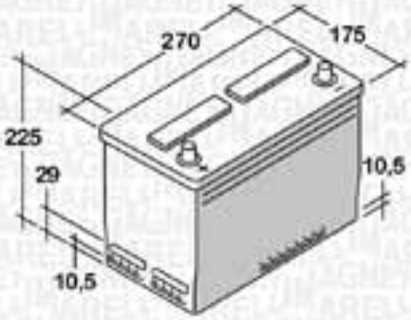
476420ES 067147630002	70	570	1	B1	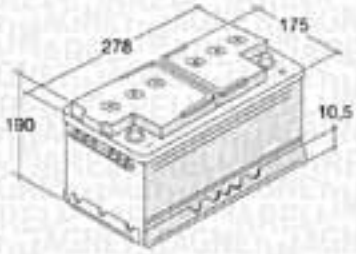
ES70NDB 068370060030	70	600	1	B1	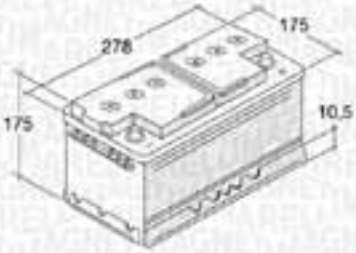

Short / Code / DIN	Ah	A (EN)	Type	Base connection	
12 VOLT - ES					
434440ES 067143401002	90	720	1	B3	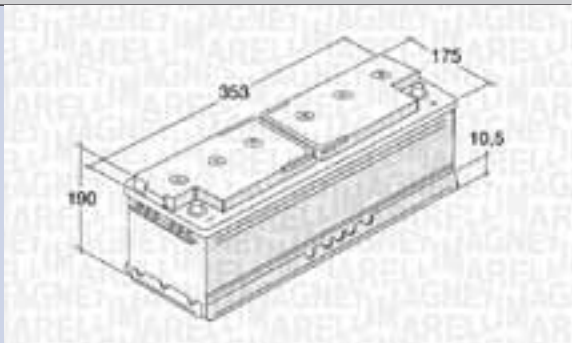
ES90NDB 068390072030	90	720	1	B3	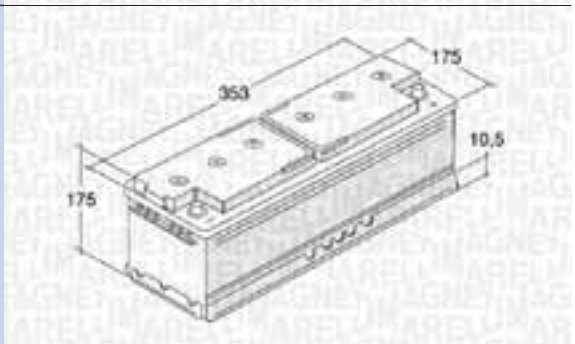
ES100720S 068100072020 60033	100	720	1	B01	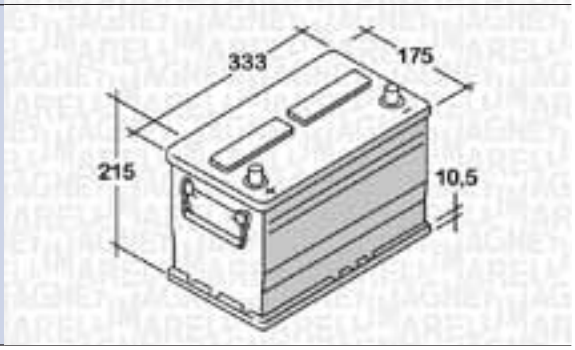

MAGNETI MARELLI

Gamma
Range
Reihe
Gamme
Gama
Gata
Υκάμα
Gata
Гамма

Short / Code / DIN	Ah	A (EN)	Type	Base connection	
12 VOLT - CARGO					
HD105D 068105076010 60528	105	710	1	B00	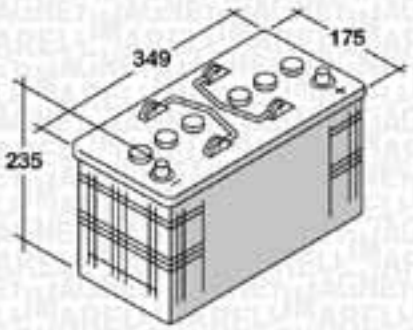
HD105D2/CS 065105071011		760			
HD105S2/CS 065105071021	105	710	1	B00	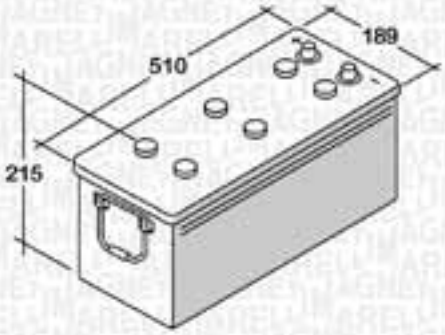
HDI110S 067100046830					
HD110D2/CS 065135085020	110	850	1	b00	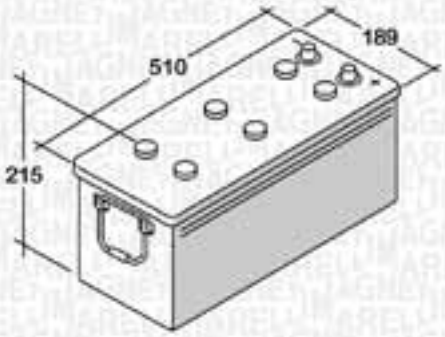
246850HD 067124641002	110	800	1	B00	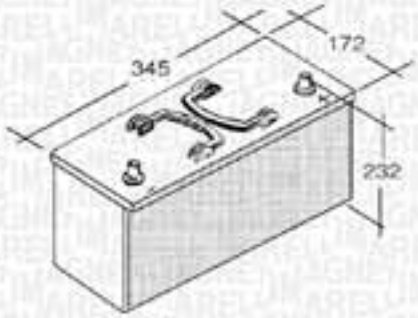
246800.1HD 067124651002	110	800 460 (IEC)	1	B01	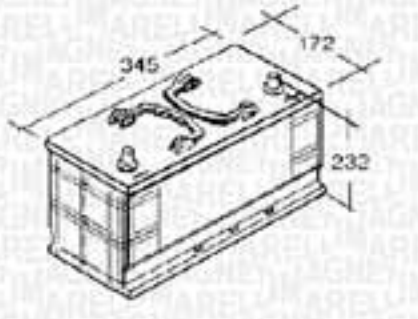

/CS =Carica secca - dry charge - Trocken geladenchargée sèche - carga seca - carregada seca

Short / Code / DIN	Ah	A (EN)	Type	Base connection	
12 VOLT - CARGO					
HD120D 068120080010 61087	120	800	1	B03	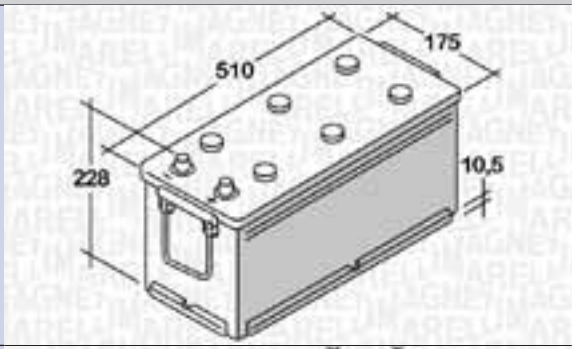
HD120D2/CS 065120085011 61087		850			
HD120S 068120080020 62040	120	800	1	B01-int	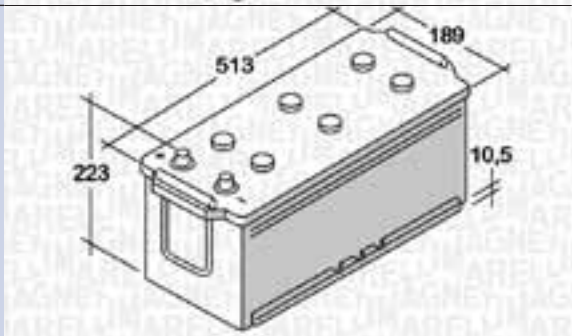
HD120S2/CS 065120085021 62040		850			
HD125D 068125076010 **HD125D2/CS** 065125076011 62523,00	125	760	1	B00	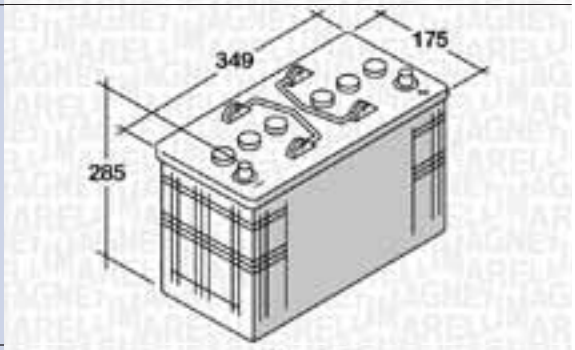
HD125D1 068125096010 62512	125	960	1	B00	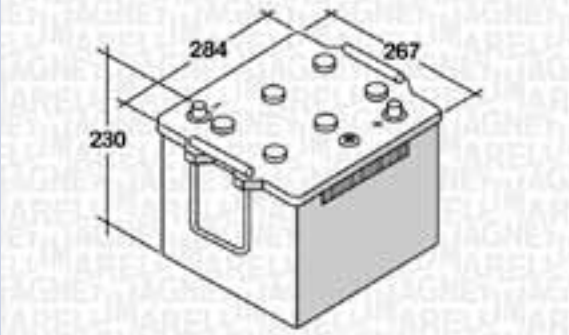
HD132D 068132090010 63211	132	900	1	B01	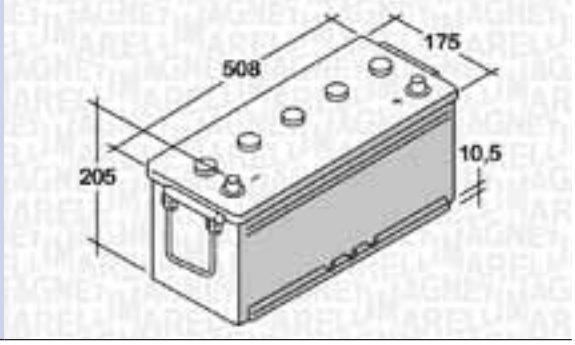

Short / Code / DIN	Ah	A (EN)	Type	Base connection	
12 VOLT - CARGO					
HDI143S 067100046880	143	1000 570 (IEC)	1	B00	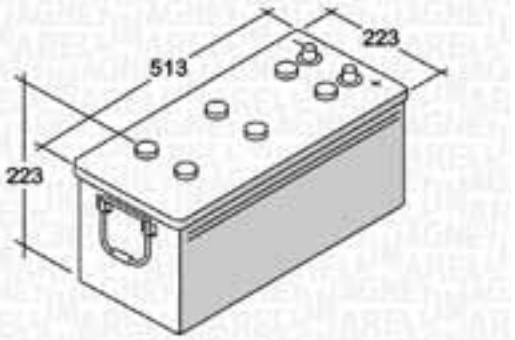
HD155D 068155105010 64389	155	1050	1	B03	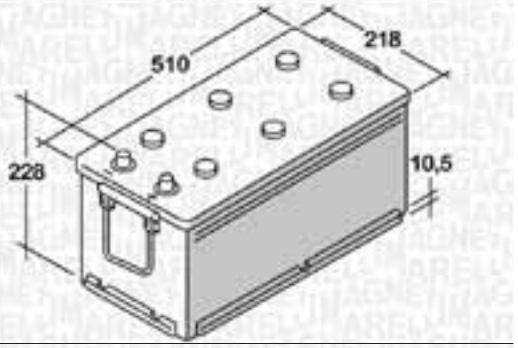
HD155S 068155105020 64317	155	1050	1	B00	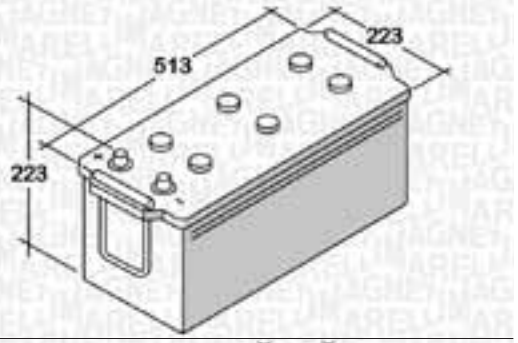
HD160D2/CS 065160100011	160	1000	1	B03	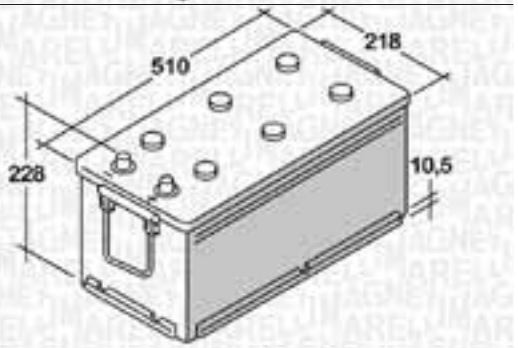
HD160S2/CS 065160100021	160	1000	1	B03	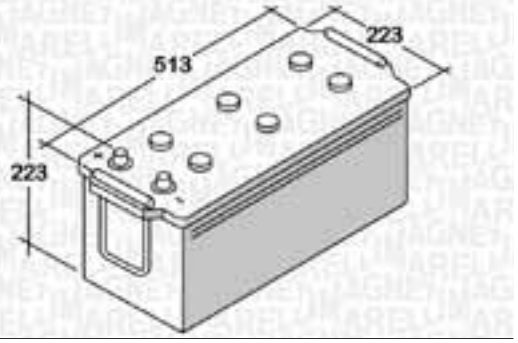

Short / Code / DIN	Ah	A (EN)	Type	Base connection	
12 VOLT - CARGO					
HDI170S 067100046950	170	1200 700 (IEC)	1	B03	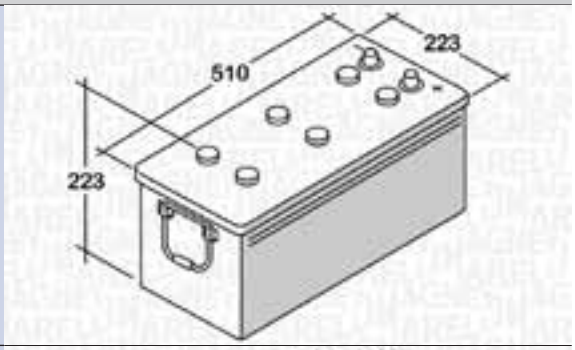
HD180D 068180110010 **HD180D2/CS** 065180110011 66519	180	1100	1	B03	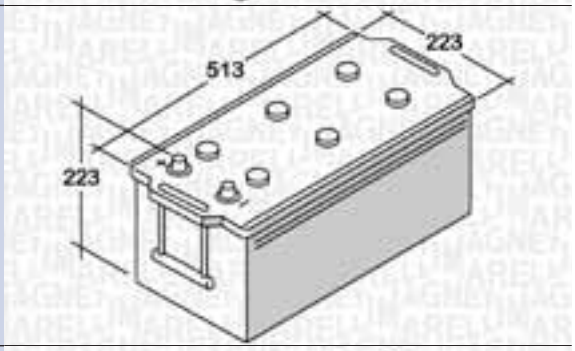
HD180S 068180110020 **HD180S2/CS** 065180110021 68032	180	1100	1	B00	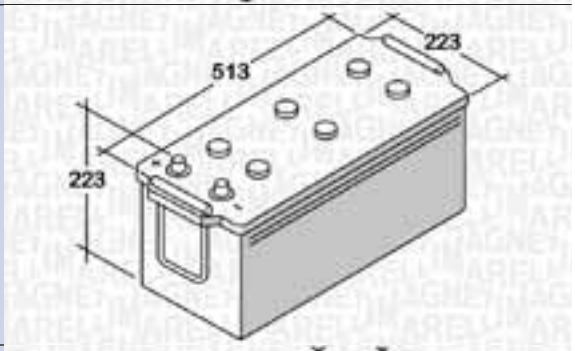
HD200D2/CS 065200105011 68532	200 200	1050 1050	1	B03	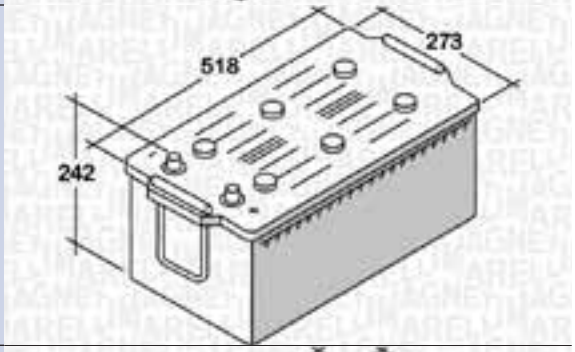
HD200S2/CS 065200105021 68029	200	1150	1	B00	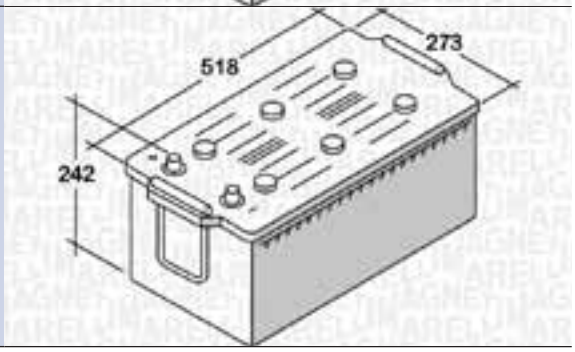

Short / Code / DIN	Ah	A (EN)	Type	Base connection	
12 VOLT - CARGO					
HD200S 068200115020 71014	200	1150	1	B00	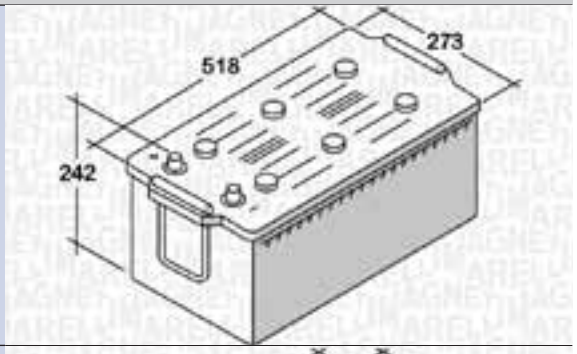
HD220S2/CS 065220115021 72018	220	1150	1	B00	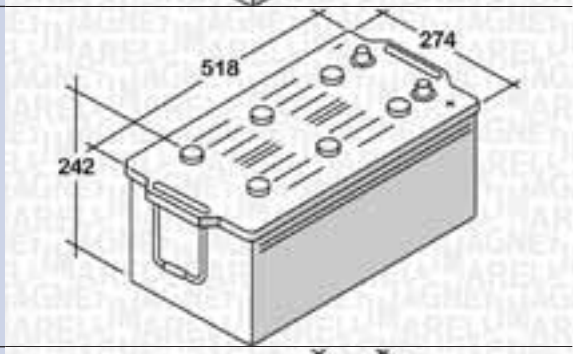
HDI220S 067100047040	220	1250 800 (IEC)	1	B00	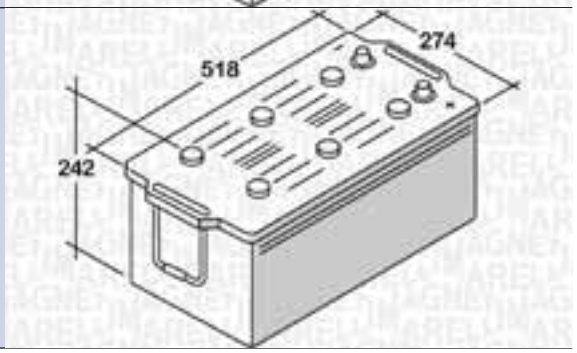
12 VOLT - CARGO SHD					
SHDI140S 067100039680	140	760 420 (IEC)	1	B00	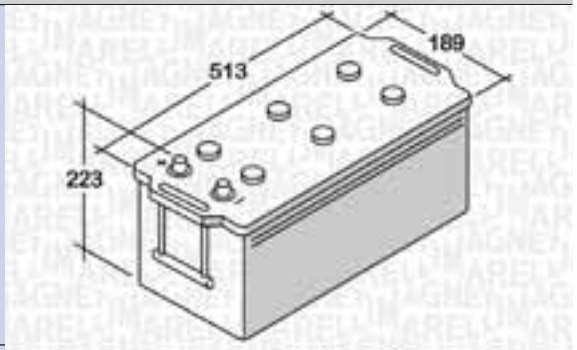
SHDI180S 067100039690	180	1100 600 (IEC)	1	B00	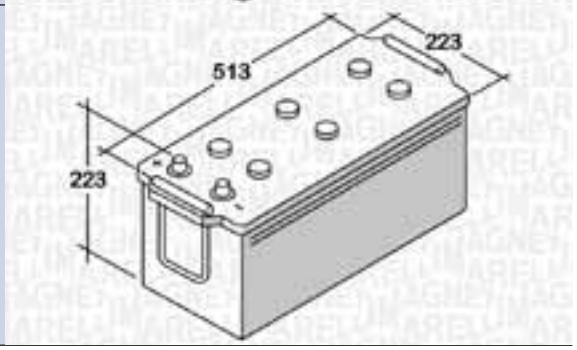

Short / Code / DIN	Ah	A (EN)	Type	Base connection	
12 VOLT - CARGO SHD					
SHDI220S 067100039700	220	1150 630 (IEC)	1	B00	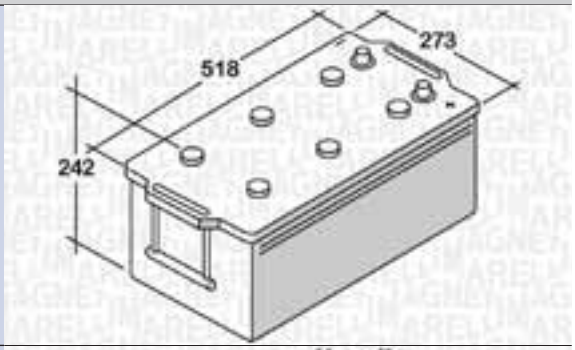
SHD225S 068225115020	225	1150	1	B00	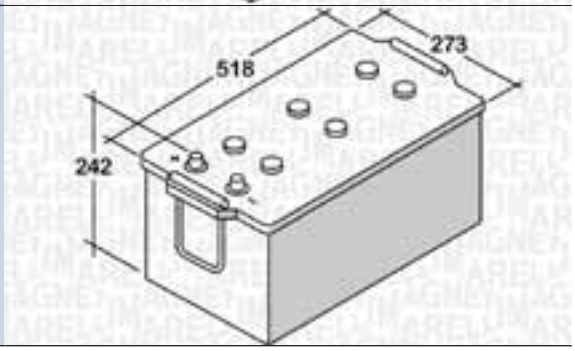

Applicazione per marca e veicolo
Vehicle application guide
Zuordnung nach Marke und Fahrzeug
Affectations par marques et véhicules
Aplicación por marca y vehículo
Aplicação por marca e veiculo
Εφαρμογη ανα μοντελο
Zastosowanie dla marki i pojazdu
Применение

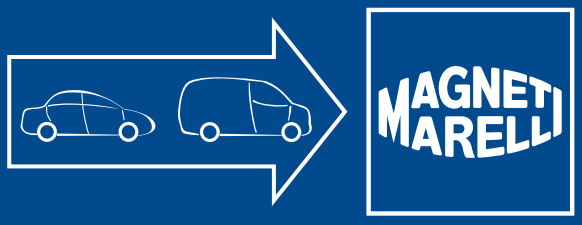

	Design		START	RUN	MAGIS	ETS	ETS alternative	ES
AIXAM								
AIXAM A.721 0.4 D		01/05→		RUN44D			ETS44D2N	
AIXAM A.741 0.4 D		01/05→		RUN44D			ETS44D2N	
AIXAM A.751 0.5 D		01/05→		RUN44D			ETS44D2N	
ALFA ROMEO								
33 1.4	(907A)	06/91→09/94		RUN50D	MAG50D-MAG45D	ETS50ND-ETS45ND	ETS50D3N-ETS50D4N	436210ES
33 1.4 i.e. (907.A3A, 907.A3B)	(907A)	06/91→09/94		RUN50D	MAG50D-MAG45D	ETS50ND-ETS45ND	ETS50D3N-ETS50D4N	436210ES
33 1.4 i.e. (907.A3A, 907.A3B)	(907A)	06/91→09/94		RUN50D	MAG50D-MAG45D	ETS50ND-ETS45ND	ETS50D3N-ETS50D4N	436210ES
33 1.4 4x4	(907A)	07/90→12/92		RUN50D	MAG50D-MAG45D	ETS50ND-ETS45ND	ETS50D3N-ETS50D4N	436210ES
33 1.5 i.e	(907A)	01/90→09/94		RUN50D	MAG50D-MAG45D	ETS50ND-ETS45ND	ETS50D3N-ETS50D4N	436210ES
33 1.5 i.e. (907A2A)	(907A)	07/90→08/91		RUN50D	MAG50D-MAG45D	ETS50ND-ETS45ND	ETS50D3N-ETS50D4N	436210ES
33 1.5	(907A)	01/90→04/93		RUN50D	MAG50D-MAG45D	ETS50ND-ETS45ND	ETS50D3N-ETS50D4N	436210ES
33 1.7 i.e. (907.A1A)	(907A)	04/92→09/94		RUN50D	MAG50D-MAG45D	ETS50ND-ETS45ND	ETS50D3N-ETS50D4N	436210ES
33 1.7 i.e. (907.A1A)	(907A)	01/90→03/92		RUN50D	MAG50D-MAG45D	ETS50ND-ETS45ND	ETS50D3N-ETS50D4N	436210ES
33 1.7 i.e. 4x4	(907A)	01/90→03/92		RUN50D	MAG50D-MAG45D	ETS50ND-ETS45ND	ETS50D3N-ETS50D4N	436210ES
33 1.7 16V (907.A1C)	(907A)	01/90→09/94		RUN50D	MAG50D-MAG45D	ETS50ND-ETS45ND	ETS50D3N-ETS50D4N	436210ES
33 1.7 16V 4x4 (907.A1G)	(907A)	01/90→09/94		RUN50D	MAG50D-MAG45D	ETS50ND-ETS45ND	ETS50D3N-ETS50D4N	436210ES
33 1.7 16V (907.A1C)	(907A)	01/90→03/92		RUN50D	MAG50D-MAG45D	ETS50ND-ETS45ND	ETS50D3N-ETS50D4N	436210ES
33 1.7 16V 4x4 (907.A1G)	(907A)	01/90→09/94		RUN50D	MAG50D-MAG45D	ETS50ND-ETS45ND	ETS50D3N-ETS50D4N	436210ES
33 1.7 16V (907.A1B)	(907A)	01/90→03/92		RUN50D	MAG50D-MAG45D	ETS50ND-ETS45ND	ETS50D3N-ETS50D4N	436210ES
33 1.7 16V 4x4 (907A1F)	(907A)	01/90→09/94		RUN50D	MAG50D-MAG45D	ETS50ND-ETS45ND	ETS50D3N-ETS50D4N	436210ES
33 1.8 TD (907A5)	(907A)	07/90→09/94		RUN62D	MAG62D	ETS62ND	ETS60D3N	438320ES
33 Sport Wagon 1.4 i.e.	(907B)	06/91→09/94		RUN50D	MAG50D-MAG45D	ETS50ND-ETS45ND	ETS50D3N-ETS50D4N	436210ES
33 Sport Wagon 1.4 i.e.	(907B)	06/91→09/94		RUN50D	MAG50D-MAG45D	ETS50ND-ETS45ND	ETS50D3N-ETS50D4N	436210ES
33 Sport Wagon 1.4 i.e. 4x4	(907B)	06/91→09/94		RUN50D	MAG50D-MAG45D	ETS50ND-ETS45ND	ETS50D3N-ETS50D4N	436210ES
33 Sport Wagon 1.5 i.e	(907B)	01/90→09/94		RUN50D	MAG50D-MAG45D	ETS50ND-ETS45ND	ETS50D3N-ETS50D4N	436210ES
33 Sport Wagon 1.7 i.e. (907.B1A)	(907B)	04/92→09/94		RUN50D	MAG50D-MAG45D	ETS50ND-ETS45ND	ETS50D3N-ETS50D4N	436210ES
33 Sport Wagon 1.7 i.e. (907.B1A)	(907B)	01/90→03/92		RUN50D	MAG50D-MAG45D	ETS50ND-ETS45ND	ETS50D3N-ETS50D4N	436210ES
33 Sport Wagon 1.7 i.e. 4x4 (907.B1E)	(907B)	01/90→03/92		RUN50D	MAG50D-MAG45D	ETS50ND-ETS45ND	ETS50D3N-ETS50D4N	436210ES
33 Sport Wagon 1.7 16V (907.B1G)	(907B)	01/90→09/94		RUN50D	MAG50D-MAG45D	ETS50ND-ETS45ND	ETS50D3N-ETS50D4N	436210ES
33 Sport Wagon 1.7 16V 4x4 (907.B1H)	(907B)	01/90→09/94		RUN50D	MAG50D-MAG45D	ETS50ND-ETS45ND	ETS50D3N-ETS50D4N	436210ES
33 Sport Wagon 1.7 16V (907.B1G)	(907B)	01/90→09/94		RUN50D	MAG50D-MAG45D	ETS50ND-ETS45ND	ETS50D3N-ETS50D4N	436210ES
33 Sport Wagon 1.7 16V 4x4 (907.B1H)	(907B)	01/90→03/92		RUN50D	MAG50D-MAG45D	ETS50ND-ETS45ND	ETS50D3N-ETS50D4N	436210ES
33 Sport Wagon 1.7 16V	(907B)	01/90→03/92		RUN50D	MAG50D-MAG45D	ETS50ND-ETS45ND	ETS50D3N-ETS50D4N	436210ES
75 3.0 V6 (162.B6C)	(162B)	02/90→02/92		RUN62D	MAG62D	ETS62ND	ETS60D3N	438320ES
145 1.4 i.e.	(930)	07/94→12/96		RUN50D	MAG50D-MAG45D	ETS50ND-ETS45ND	ETS50D3N-ETS50D4N	436210ES
145 1.4 i.e. 16V T.S.	(930)	12/96→01/01		RUN50D	MAG50D-MAG45D	ETS50ND-ETS45ND	ETS50D3N-ETS50D4N	436210ES
145 1.6 i.e.	(930)	10/94→12/96		RUN50D	MAG50D	ETS50ND	ETS50D3N-ETS50D4N	
145 1.6 i.e. 16V T.S.	(930)	12/96→01/01		RUN50D	MAG50D	ETS50ND	ETS50D3N-ETS50D4N	
145 1.7 i.e. 16V	(930)	10/94→12/96		RUN50D	MAG50D	ETS50ND	ETS50D3N-ETS50D4N	
145 1.8 i.e. 16V T.S.	(930)	12/96→12/98		RUN50D	MAG50D	ETS50ND	ETS50D3N-ETS50D4N	
145 1.8 i.e. 16V	(930)	03/98→01/01		RUN50D	MAG50D	ETS50ND	ETS50D3N-ETS50D4N	
145 2.0 16V T.S.	(930)	10/95→01/01		RUN62D	MAG62D	ETS62ND	ETS60D3N	438320ES
145 2.0 16V Quadrifoglio	(930)	03/98→01/01		RUN62D	MAG62D	ETS62ND	ETS60D3N	438320ES
145 1.9 D	(930)	07/94→02/99		RUN62D	MAG62D	ETS62ND	ETS60D3N	438320ES
145 1.9 TD	(930)	10/94→02/99		RUN62D	MAG62D	ETS62ND	ETS60D3N	438320ES
145 1.9 JTD	(930)	02/99→01/01		RUN62D	MAG62D	ETS62ND	ETS60D3N	438320ES

	Design		START	RUN	MAGIS	ETS	ETS alternative	ES
ALFA ROMEO								
146 1.4 i.e.	(930)	12/94→12/96		RUN50D	MAG50D-MAG45D	ETS50ND-ETS45ND	ETS50D3N-ETS50D4N	436210ES
146 1.4 i.e. 16V T.S.	(930)	11/96→01/01		RUN50D	MAG50D-MAG45D	ETS50ND-ETS45ND	ETS50D3N-ETS50D4N	436210ES
146 1.6 i.e.	(930)	12/94→12/96		RUN50D	MAG50D	ETS50ND	ETS50D3N-ETS50D4N	
146 1.6 i.e. 16V T.S.	(930)	11/96→01/01		RUN50D	MAG50D	ETS50ND	ETS50D3N-ETS50D4N	
146 1.7 i.e. 16V	(930)	12/94→12/96		RUN50D	MAG50D	ETS50ND	ETS50D3N-ETS50D4N	
146 1.8 i.e. 16V T.S.	(930)	11/96→01/01		RUN62D	MAG62D	ETS62ND	ETS60D3N	438320ES
146 1.8 i.e. 16V T.S.	(930)	03/98→01/01		RUN62D	MAG62D	ETS62ND	ETS60D3N	438320ES
146 2.0 16V T.S.	(930)	10/95→01/01		RUN50D	MAG50D	ETS50ND	ETS50D3N-ETS50D4N	
146 2.0 16V Quadrifoglio	(930)	03/98→01/01		RUN50D	MAG50D	ETS50ND	ETS50D3N-ETS50D4N	
146 1.9 D	(930)	05/95→09/96		RUN62D	MAG62D	ETS62ND	ETS60D3N	438320ES
146 1.9 TD	(930)	12/94→02/99		RUN62D	MAG62D	ETS62ND	ETS60D3N	438320ES
146 1.9 JTD	(930)	02/99→01/01		RUN62D	MAG62D	ETS62ND	ETS60D3N	438320ES
147 1.6 16V T.SPARK ECO (937AXA1A)	(937)	01/01→		RUN50D	MAG50D	ETS50ND	ETS50D3N-ETS50D4N	
147 1.6 16V T.SPARK (937AXB1A)	(937)	01/01→		RUN50D	MAG50D	ETS50ND	ETS50D3N-ETS50D4N	
147 2.0 16V T.SPARK (937AXC1_)	(937)	01/01→		RUN62D	MAG62D	ETS62ND	ETS60D3N	438320ES
147 3.2 GTA	(937)	02/03→		RUN62D	MAG62D	ETS62ND	ETS60D3N	438320ES
147 1.9 JTD	(937)	06/03→		RUN62D	MAG62D	ETS62ND	ETS60D3N	438320ES
147 1.9 JTD (937AXD1A)	(937)	04/01→		RUN62D	MAG62D	ETS62ND	ETS60D3N	438320ES
147 1.9 JTDM 16V	(937)	10/04→		RUN62D	MAG62D	ETS62ND	ETS60D3N	438320ES
147 1.9 JTDM 8V	(937)	07/05→		RUN62D	MAG62D	ETS62ND	ETS60D3N	438320ES
147 1.9 JTD 16V	(937)	09/03→09/04		RUN62D	MAG62D	ETS62ND	ETS60D3N	438320ES
147 1.9 JTD 16V	(937)	10/04→		RUN62D	MAG62D	ETS62ND	ETS60D3N	438320ES
147 1.9 JTD 16V	(937)	11/02→		RUN62D	MAG62D	ETS62ND	ETS60D3N	438320ES
147 1.9 JTDM 16V	(937)	07/05→		RUN62D	MAG62D	ETS62ND	ETS60D3N	438320ES
147 1.9 JTDM 16V	(937)	06/08→		RUN62D				
155 1.6 16V T.S.	(167)	05/96→12/97		RUN50D	MAG50D	ETS50ND	ETS50D3N-ETS50D4N	
155 1.7 T.S.	(167)	04/93→04/96		RUN50D	MAG50D	ETS50ND	ETS50D3N-ETS50D4N	
155 1.7 T.S. (167.A4D, 167.A4H)	(167)	04/93→04/96		RUN50D	MAG50D	ETS50ND	ETS50D3N-ETS50D4N	
155 1.7 T.S. 16V	(167)	05/96→12/97		RUN50D	MAG50D	ETS50ND	ETS50D3N-ETS50D4N	
155 1.8 T.S.	(167)	02/92→12/97		RUN50D	MAG50D	ETS50ND	ETS50D3N-ETS50D4N	
155 1.8 T.S. Sport (167.A4A, 167.A4C, 167.A4E)	(167)	01/92→12/96		RUN50D	MAG50D	ETS50ND	ETS50D3N-ETS50D4N	
155 1.8 T.S.	(167)	02/92→06/93		RUN50D	MAG50D	ETS50ND	ETS50D3N-ETS50D4N	
155 2.0 T.S. (167.A2A)	(167)	02/92→02/95		RUN62D	MAG62D	ETS62ND	ETS60D3N	438320ES
155 2.0 T.S. (167.A2)	(167)	02/92→04/93		RUN62D	MAG62D	ETS62ND	ETS60D3N	438320ES
155 2.0 T.S. 16V (167.A2G)	(167)	03/95→12/97		RUN62D	MAG62D	ETS62ND	ETS60D3N	438320ES
155 2.0 16V Turbo Q4 (167.A2B, 167. A2C, 167.A2E)	(167)	01/92→12/97		RUN62D	MAG62D	ETS62ND	ETS60D3N	438320ES
155 2.0 16V Turbo Q4	(167)	01/92→12/97		RUN62D	MAG62D	ETS62ND	ETS60D3N	438320ES
155 2.5 V6 (167.A1C, 167.A1E)	(167)	10/92→12/97		RUN62D	MAG62D	ETS62ND	ETS60D3N	438320ES
155 2.5 V6 (167.A1)	(167)	02/92→09/96		RUN62D	MAG62D	ETS62ND	ETS60D3N	438320ES
155 1.9 TD (167.A3)	(167)	04/93→12/97		RUN62D	MAG62D	ETS62ND	ETS60D3N	438320ES
155 2.5 TD (167.A1A)	(167)	04/93→12/97		RUN72D	MAG74D	ETS74ND	ETS70D1N-ETS74DI	476420ES
156 1.6 16V T.SPARK (932A4)	(932)	09/97→09/05		RUN62D	MAG62D	ETS62ND	ETS60D3N	438320ES
156 1.8 16V T.SPARK (932A31__)	(932)	10/00→09/05		RUN62D	MAG62D	ETS62ND	ETS60D3N	438320ES
156 1.8 16V T.SPARK (932A3)	(932)	09/97→10/00		RUN62D	MAG62D	ETS62ND	ETS60D3N	438320ES
156 2.0 16V T.SPARK (932A21__)	(932)	10/00→03/02		RUN62D	MAG62D	ETS62ND	ETS60D3N	438320ES

	Design		START	RUN	MAGIS	ETS	ETS alternative	ES
ALFA ROMEO								
156 2.0 16V T.SPARK (932A2)	(932)	09/97→10/00		RUN62D	MAG62D	ETS62ND	ETS60D3N	438320ES
156 2.0 Twin Spark	(932)	11/97→04/00		RUN62D	MAG62D	ETS62ND	ETS60D3N	438320ES
156 2.0 JTS (932AXA)	(932)	03/02→09/05		RUN62D	MAG62D	ETS62ND	ETS60D3N	438320ES
156 2.5 V6 24V (932A1)	(932)	09/97→10/00		RUN72D	MAG74D	ETS74ND	ETS70D1N-ETS74DI	476420ES
156 2.5 V6 24V (932A11_)	(932)	10/00→09/05		RUN72D	MAG74D	ETS74ND	ETS70D1N-ETS74DI	476420ES
156 3.2 GTA (932AXB)	(932)	03/02→09/05		RUN72D	MAG74D	ETS74ND	ETS70D1N-ETS74DI	476420ES
156 1.9 JTD (932B2)	(932)	09/97→10/00		RUN62D	MAG62D	ETS62ND	ETS60D3N	438320ES
156 1.9 JTD (932A2B__)	(932)	10/00→05/01		RUN62D	MAG62D	ETS62ND	ETS60D3N	438320ES
156 1.9 JTD (932A2B, 932A2C)	(932)	05/01→09/05		RUN62D	MAG62D	ETS62ND	ETS60D3N	438320ES
156 1.9 JTD	(932)	11/03→09/05		RUN62D	MAG62D	ETS62ND	ETS60D3N	438320ES
156 1.9 JTD	(932)	11/02→11/04		RUN62D	MAG62D	ETS62ND	ETS60D3N	438320ES
156 1.9 JTD 16V	(932)	11/02→09/05		RUN62D	MAG62D	ETS62ND	ETS60D3N	438320ES
156 1.9 JTD	(932)	09/04→09/05		RUN62D	MAG62D	ETS62ND	ETS60D3N	438320ES
156 2.4 JTD (932B1)	(932)	09/97→10/00		RUN72D	MAG74D	ETS74ND	ETS70D1N-ETS74DI	476420ES
156 2.4 JTD (932A1B__)	(932)	10/00→09/05		RUN72D	MAG74D	ETS74ND	ETS70D1N-ETS74DI	476420ES
156 2.4 JTD (932AXC)	(932)	03/02→09/05		RUN72D	MAG74D	ETS74ND	ETS70D1N-ETS74DI	476420ES
156 2.4 JTD	(932)	06/03→09/05		RUN72D	MAG74D	ETS74ND	ETS70D1N-ETS74DI	476420ES
156 2.4 JTD	(932)	10/03→09/05		RUN72D	MAG74D	ETS74ND	ETS70D1N-ETS74DI	476420ES
156 Sportwagon 1.6 16V T.SPARK. (932A4)	(932)	05/00→05/06		RUN62D	MAG62D	ETS62ND	ETS60D3N	438320ES
156 Sportwagon 1.8 16V T.SPARK (932B31__)	(932)	10/00→05/06		RUN62D	MAG62D	ETS62ND	ETS60D3N	438320ES
156 Sportwagon 1.8 16V T.SPARK (932A3)	(932)	05/00→10/00		RUN62D	MAG62D	ETS62ND	ETS60D3N	438320ES
156 Sportwagon 2.0 16V T.SPARK (932B21__)	(932)	10/00→03/02		RUN62D	MAG62D	ETS62ND	ETS60D3N	438320ES
156 Sportwagon 2.0 16V T.SPARK (932A2)	(932)	05/00→10/00		RUN62D	MAG62D	ETS62ND	ETS60D3N	438320ES
156 Sportwagon 2.0	(932)	03/02→05/06		RUN62D	MAG62D	ETS62ND	ETS60D3N	438320ES
156 Sportwagon 2.0 JTS (932BXA)	(932)	03/02→05/06		RUN62D	MAG62D	ETS62ND	ETS60D3N	438320ES
156 Sportwagon 2.5 V6 24V (932A1)	(932)	05/00→10/00		RUN72D	MAG74D	ETS74ND	ETS70D1N-ETS74DI	476420ES
156 Sportwagon 2.5 V6 24V (932B11_)	(932)	10/00→05/06		RUN72D	MAG74D	ETS74ND	ETS70D1N-ETS74DI	476420ES
156 Sportwagon 3.2 GTA (932BXB)	(932)	03/02→05/06		RUN72D	MAG74D	ETS74ND	ETS70D1N-ETS74DI	476420ES
156 Sportwagon 1.9 JTD (932B2)	(932)	05/00→10/00		RUN62D	MAG62D	ETS62ND	ETS60D3N	438320ES
156 Sportwagon 1.9 JTD (932B2B__)	(932)	10/00→05/01		RUN62D	MAG62D	ETS62ND	ETS60D3N	438320ES
156 Sportwagon 1.9 JTD (932B2B, 932B2C)	(932)	05/01→05/06		RUN62D	MAG62D	ETS62ND	ETS60D3N	438320ES
156 Sportwagon 1.9 JTD	(932)	11/03→05/06		RUN62D	MAG62D	ETS62ND	ETS60D3N	438320ES
156 Sportwagon 1.9 JTD	(932)	11/02→11/04		RUN62D	MAG62D	ETS62ND	ETS60D3N	438320ES
156 Sportwagon 1.9 JTD 16V	(932)	11/02→05/06		RUN62D	MAG62D	ETS62ND	ETS60D3N	438320ES
156 Sportwagon 1.9 JTD	(932)	03/05→05/06		RUN62D	MAG62D	ETS62ND	ETS60D3N	438320ES
156 Sportwagon 1.9 JTD 16V Q4	(932)	07/04→05/06		RUN62D	MAG62D	ETS62ND	ETS60D3N	438320ES
156 Sportwagon 2.4 JTD (932B1)	(932)	05/00→10/00		RUN72D	MAG74D	ETS74ND	ETS70D1N-ETS74DI	476420ES
156 Sportwagon 2.4 JTD (932B1B__)	(932)	10/00→05/06		RUN72D	MAG74D	ETS74ND	ETS70D1N-ETS74DI	476420ES
156 Sportwagon 2.4 JTD (932BXC)	(932)	03/02→05/06		RUN72D	MAG74D	ETS74ND	ETS70D1N-ETS74DI	476420ES
156 Sportwagon 2.4 JTD	(932)	06/03→05/06		RUN72D	MAG74D	ETS74ND	ETS70D1N-ETS74DI	476420ES
156 Sportwagon 2.4 JTD	(932)	10/03→05/06		RUN72D	MAG74D	ETS74ND	ETS70D1N-ETS74DI	476420ES

	Design		START	RUN	MAGIS	ETS	ETS alternative	ES
ALFA ROMEO								
159 1.8 TBi		05/09→		RUN62D				
159 1.8 MPI		03/07→		RUN62D				
159 1.9 JTS		09/05→		RUN62D	MAG62D	ETS62ND	ETS60D3N	438320ES
159 2.2 JTS		09/05→		RUN62D	MAG62D	ETS62ND	ETS60D3N	438320ES
159 3.2 JTS		02/08→		RUN72D	MAG74D	ETS74ND	ETS70D1N-ETS74DI	476420ES
159 3.2 JTS Q4		12/05→		RUN72D	MAG74D	ETS74ND	ETS70D1N-ETS74DI	476420ES
159 1.9 JTDM 8V		09/05→		RUN62D	MAG62D	ETS62ND	ETS60D3N	438320ES
159 1.9 JTDM 8V		09/05→		RUN62D	MAG62D	ETS62ND	ETS60D3N	438320ES
159 1.9 JTDM 16V		09/05→		RUN62D	MAG62D	ETS62ND	ETS60D3N	438320ES
159 1.9 JTDM 16V		09/05→		RUN62D	MAG62D	ETS62ND	ETS60D3N	438320ES
159 2.0 JTDM		06/10→		RUN72D				
159 2.0 JTDM		05/09→		RUN72D				
159 2.4 JTDM		09/05→		RUN72D	MAG74D	ETS74ND	ETS70D1N-ETS90D1N	476420ES
159 2.4 JTDM		05/07→		RUN72D	MAG74D	ETS74ND	ETS70D1N-ETS90D1N	476420ES
159 2.4 JTDM Q4		05/07→		RUN72D	MAG74D	ETS74ND	ETS70D1N-ETS90D1N	476420ES
159 Sportwagon 1.8 TBi		05/09→		RUN62D				
159 Sportwagon 1.8 MPI		03/07→		RUN62D				
159 Sportwagon 1.9 JTS		03/06→		RUN62D	MAG62D	ETS62ND	ETS60D3N	438320ES
159 Sportwagon 2.2 JTS		03/06→		RUN62D	MAG62D	ETS62ND	ETS60D3N	438320ES
159 Sportwagon 3.2 JTS		02/08→		RUN72D	MAG74D	ETS74ND	ETS70D1N-ETS74DI	476420ES
159 Sportwagon 3.2 JTS Q4		03/06→		RUN72D	MAG74D	ETS74ND	ETS70D1N-ETS74DI	476420ES
159 Sportwagon 1.9 JTDM 8V		03/06→		RUN62D	MAG62D	ETS62ND	ETS60D3N	438320ES
159 Sportwagon 1.9 JTDM 8V		03/06→		RUN62D	MAG62D	ETS62ND	ETS60D3N	438320ES
159 Sportwagon 1.9 JTDM 16V		03/06→		RUN62D	MAG62D	ETS62ND	ETS60D3N	438320ES
159 Sportwagon 1.9 JTDM 16V		03/06→		RUN62D	MAG62D	ETS62ND	ETS60D3N	438320ES
159 Sportwagon 2.0 JTDM		06/10→		RUN72D				
159 Sportwagon 2.0 JTDM		05/09→		RUN72D				
159 Sportwagon 2.4 JTDM		03/06→		RUN72D	MAG74D	ETS74ND	ETS70D1N-ETS74DI	476420ES
159 Sportwagon 2.4 JTDM		05/07→		RUN72D	MAG74D	ETS74ND	ETS70D1N-ETS74DI	476420ES
159 Sportwagon 2.4 JTDM Q4		05/07→		RUN72D	MAG74D	ETS74ND	ETS70D1N-ETS74DI	476420ES
164 2.0 Twin Spark	(164)	07/90→10/92		RUN62D	MAG62D	ETS62ND	ETS60D3N	438320ES
164 2.0 T.S. (164.H3)	(164)	09/92→09/98		RUN62D	MAG62D	ETS62ND	ETS60D3N	438320ES
164 2.0 Turbo	(164)	07/90→10/92		RUN62D	MAG62D	ETS62ND	ETS60D3N	438320ES
164 2.0 Turbo	(164)	07/90→10/92		RUN62D	MAG62D	ETS62ND	ETS60D3N	438320ES
164 2.0 V6 Turbo (164.K3)	(164)	09/92→09/98		RUN62D	MAG62D	ETS62ND	ETS60D3N	438320ES
164 2.0 V6 Turbo (164.A2G, 164.A2F)	(164)	03/91→09/92		RUN62D	MAG62D	ETS62ND	ETS60D3N	438320ES
164 2.5 V6	(164)	09/92→09/98		RUN72D	MAG74D	ETS74ND	ETS70D1N-ETS74DI	476420ES
164 3.0 V6 (164.H1A, 164.H1B, 164. K1P)	(164)	09/92→09/98		RUN72D	MAG74D	ETS74ND	ETS70D1N-ETS74DI	476420ES
164 3.0	(164)	10/94→08/97		RUN72D	MAG74D	ETS74ND	ETS70D1N-ETS74DI	476420ES
164 3.0 i.e. QV (164.AG)	(164)	09/90→09/92		RUN72D	MAG74D	ETS74ND	ETS70D1N-ETS74DI	476420ES
164 3.0	(164)	11/92→10/97		RUN72D	MAG74D	ETS74ND	ETS70D1N-ETS74DI	476420ES
164 3.0	(164)	03/95→08/97		RUN72D	MAG74D	ETS74ND	ETS70D1N-ETS74DI	476420ES
164 3.0	(164)	04/93→02/95		RUN72D	MAG74D	ETS74ND	ETS70D1N-ETS74DI	476420ES
164 3.0	(164)	03/95→10/97		RUN72D	MAG74D	ETS74ND	ETS70D1N-ETS74DI	476420ES
164 3.0	(164)	11/92→10/95		RUN72D	MAG74D	ETS74ND	ETS70D1N-ETS74DI	476420ES
164 3.0 24V (164.K1)	(164)	09/92→09/98		RUN72D	MAG74D	ETS74ND	ETS70D1N-ETS74DI	476420ES

	Design		START	RUN	MAGIS	ETS	ETS alternative	ES
ALFA ROMEO								
164 3.0	(164)	03/95→10/97		RUN72D	MAG74D	ETS74ND	ETS70D1N-ETS74DI	476420ES
164 3.0	(164)	04/93→02/95		RUN72D	MAG74D	ETS74ND	ETS70D1N-ETS74DI	476420ES
164 3.0	(164)	03/95→08/97		RUN72D	MAG74D	ETS74ND	ETS70D1N-ETS74DI	476420ES
164 3.0 24V Q4 (164.K1M, 164.K1C)	(164)	02/94→09/98		RUN72D	MAG74D	ETS74ND	ETS70D1N-ETS74DI	476420ES
164 3.0 24V QV (164.H1)	(164)	09/92→09/98		RUN72D	MAG74D	ETS74ND	ETS70D1N-ETS74DI	476420ES
164 3.0 All-wheel Drive	(164)	11/92→10/97		RUN62D	MAG62D	ETS62ND	ETS60D3N	438320ES
164 2.5 TD (164.K2A, 164.K2B)	(164)	09/92→09/98		RUN95D		ETS92ND-ETS95D1N		434440ES
166 2.0 T.Spark (936A3B__)	(936)	10/00→		RUN62D	MAG62D	ETS62ND	ETS60D3N	438320ES
166 2.0 T.Spark (936A3A__)	(936)	09/98→10/00	AGM70D	RUN62D	MAG62D	ETS62ND	ETS60D3N	438320ES
166 2.0 V6 (936A3___)	(936)	09/98→	AGM70D	RUN72D	MAG74D	ETS74ND	ETS70D1N-ETS74DI	476420ES
166 2.5 V6 24V (936A21__)	(936)	10/00→		RUN72D	MAG74D	ETS74ND	ETS70D1N-ETS74DI	476420ES
166 2.5 V6 24V (936A2___)	(936)	09/98→10/00	AGM70D	RUN72D	MAG74D	ETS74ND	ETS70D1N-ETS74DI	476420ES
166 3.0 V6 24V (936A11__)	(936)	10/00→		RUN72D	MAG74D	ETS74ND	ETS70D1N-ETS74DI	476420ES
166 3.0 V6 24V (936A1___)	(936)	09/98→10/00	AGM70D	RUN72D	MAG74D	ETS74ND	ETS70D1N-ETS74DI	476420ES
166 3.2 V6 24V	(936)	10/03→	AGM70D	RUN72D	MAG74D	ETS74ND	ETS70D1N-ETS74DI	476420ES
166 2.4 JTD (936A2A__)	(936)	09/98→10/00	AGM70D	RUN72D	MAG74D	ETS74ND	ETS70D1N-ETS74DI	476420ES
166 2.4 JTD (936A2B__)	(936)	10/00→		RUN72D	MAG74D	ETS74ND	ETS70D1N-ETS74DI	476420ES
166 2.4 JTD	(936)	04/02→		RUN72D	MAG74D	ETS74ND	ETS70D1N-ETS74DI	476420ES
166 2.4 JTD	(936)	10/03→		RUN72D	MAG74D	ETS74ND	ETS70D1N-ETS74DI	476420ES
166 2.4 JTD	(936)	07/06→		RUN72D	MAG74D	ETS74ND	ETS70D1N-ETS74DI	476420ES
166 2.4 JTD	(936)	07/05→		RUN72D	MAG74D	ETS74ND	ETS70D1N-ETS74DI	476420ES
166 2.4 JTD		09/98→	AGM70D					
BRERA 1.8 TBi		05/09→		RUN62D				
BRERA 2.2 JTS		01/06→		RUN62D	MAG62D	ETS62ND	ETS60D3N	438320ES
BRERA 3.2 JTS		03/08→		RUN62D				
BRERA 3.2 JTS Q4		01/06→		RUN62D	MAG62D	ETS62ND	ETS60D3N	438320ES
BRERA 2.0 JTDM		05/09→		RUN72D				
BRERA 2.4 JTDM 20V		01/06→		RUN72D	MAG74D	ETS74ND	ETS70D1N-ETS74DI	476420ES
BRERA 2.4 JTDM 20V		05/07→		RUN72D	MAG74D	ETS74ND	ETS70D1N-ETS74DI	476420ES
GIULIETTA 1.4 TB, TB Multiair	Stop/Start	03/10→	SST63D					
GIULIETTA 1.6 JTDm	Stop/Start	03/10→	SST72D					
GIULIETTA 2.0 JTDm	Stop/Start	03/10→	SST72D					
GIULIETTA 1.8 TBi	(940)	04/10→		RUN62D				
GT 1.8 TS		11/03→		RUN62D	MAG62D	ETS62ND	ETS60D3N	438320ES
GT 2.0 JTS		11/03→		RUN62D	MAG62D	ETS62ND	ETS60D3N	438320ES
GT 3.2 GTA		11/03→		RUN62D	MAG62D	ETS62ND	ETS60D3N	438320ES
GT 1.9 JTD		11/03→		RUN62D	MAG62D	ETS62ND	ETS60D3N	438320ES
GT 1.9 JTD		05/08→		RUN62D				
GTV 1.8 16V (916C3)	(916C_)	05/98→		RUN62D	MAG62D	ETS62ND	ETS60D3N	438320ES
GTV 2.0 T.SPARK 16V (916.C2__, 916C2C00)	(916C_)	06/95→		RUN62D	MAG62D	ETS62ND	ETS60D3N	438320ES
GTV 2.0 T.SPARK 16V (916C2C)	(916C_)	05/98→08/00		RUN62D	MAG62D	ETS62ND	ETS60D3N	438320ES
GTV 2.0 JTS	(916C_)	04/03→		RUN62D	MAG62D	ETS62ND	ETS60D3N	438320ES
GTV 2.0 V6 Turbo (916.C2A)	(916C_)	06/95→		RUN62D	MAG62D	ETS62ND	ETS60D3N	438320ES
GTV 3.0 V6 24V (916.C1B__)	(916C_)	10/00→		RUN72D	MAG74D	ETS74ND	ETS70D1N-ETS74DI	476420ES
GTV 3.0 V6 24V (916.C1)	(916C_)	10/96→10/00		RUN72D	MAG74D	ETS74ND	ETS70D1N-ETS74DI	476420ES
GTV 3.2 V6 24V	(916C_)	04/03→		RUN72D				

	Design		START	RUN	MAGIS	ETS	ETS alternative	ES
ALFA ROMEO								
MITO 1.4		09/08→		RUN50D				
MITO 1.4		09/08→		RUN50D				
MITO 1.4		09/08→		RUN50D				
MITO 1.4 Turbo		09/08→		RUN50D				
MITO 1.4 TB	Stop/Start , A	10/09→	SST63D					
MITO 1.3 JTDM	Stop/Start , A	10/09→	SST72D					
RZ 3.0 V6 Zagato		01/92→12/94		RUN72D	MAG74D	ETS74ND	ETS70D1N-ETS74DI	476420ES
SPIDER 1600	(115)	01/90→12/93		RUN62D	MAG62D	ETS62ND	ETS60D3N	438320ES
SPIDER 2000	(115)	01/90→12/93		RUN62D	MAG62D	ETS62ND	ETS60D3N	438320ES
SPIDER 1.8 16V (916S3)	(916S_)	05/98→04/05		RUN62D	MAG62D	ETS62ND	ETS60D3N	438320ES
SPIDER 2.0 T.SPARK 16V (916S2C00)	(916S_)	06/95→04/05		RUN62D	MAG62D	ETS62ND	ETS60D3N	438320ES
SPIDER 2.0 T.SPARK 16V (916S2B)	(916S_)	05/98→08/00		RUN62D	MAG62D	ETS62ND	ETS60D3N	438320ES
SPIDER 2.0 JTS	(916S_)	04/03→04/05		RUN62D	MAG62D	ETS62ND	ETS60D3N	438320ES
SPIDER 2.0 V6 Turbo (916S2A)	(916S_)	05/98→04/05		RUN62D	MAG62D	ETS62ND	ETS60D3N	438320ES
SPIDER 3.0 V6 (916S1)	(916S_)	06/95→04/05	AGM70D	RUN72D	MAG74D	ETS74ND	ETS70D1N-ETS74DI	476420ES
SPIDER 3.0 V6 (916S1B00)	(916S_)	10/00→04/05		RUN72D	MAG74D	ETS74ND	ETS70D1N-ETS74DI	476420ES
SPIDER 3.0 V6 24V	(916S_)	01/99→10/00		RUN72D	MAG74D	ETS74ND	ETS70D1N-ETS74DI	476420ES
SPIDER 3.2 V6 24V	(916S_)	04/03→04/05	AGM70D	RUN72D	MAG74D	ETS74ND	ETS70D1N-ETS74DI	476420ES
SPIDER 1.8 TBi		05/09→		RUN62D				
SPIDER 2.2 JTS		09/06→		RUN62D	MAG62D	ETS62ND	ETS60D3N	438320ES
SPIDER 3.2 JTS		03/08→		RUN72D	MAG74D	ETS74ND	ETS70D1N-ETS74DI	476420ES
SPIDER 3.2 JTS Q4		09/06→		RUN72D	MAG74D	ETS74ND	ETS70D1N-ETS74DI	476420ES
SPIDER 2.0 JTDM		05/09→		RUN72D				
SPIDER 2.4 JTDM		04/07→		RUN72D	MAG74D	ETS74ND	ETS70D1N-ETS74DI	476420ES
SPIDER 2.4 JTDM		03/08→		RUN72D	MAG74D	ETS74ND	ETS70D1N-ETS74DI	476420ES
SPIDER 3.0 24V, V6		06/95→04/05	AGM70D		MAG74D	ETS74ND	ETS70D1N-ETS74DI	476420ES
SPIDER 3.2 24V, V6		04/03→04/05	AGM70D		MAG74D	ETS74ND	ETS70D1N-ETS74DI	476420ES
ASTON MARTIN								
ASTON DB7 Coupe 3.2		05/94→06/99		RUN72D	MAG74D	ETS74ND	ETS70D1N-ETS74DI	476420ES
ASTON DB7 Coupe 3.2		01/94→		RUN72D	MAG74D	ETS74ND	ETS70D1N-ETS74DI	476420ES
ASTON DB7 Coupe 5.9		03/99→		RUN95D				
ASTON DB7 Coupe 5.9		07/99→10/03		RUN72D	MAG74D	ETS74ND	ETS70D1N-ETS74DI	476420ES
ASTON DB7 Coupe 6.0		10/02→10/03		RUN72D	MAG74D	ETS74ND	ETS70D1N-ETS74DI	476420ES
ASTON DB7 Convertible 3.2		11/95→06/99		RUN72D	MAG74D	ETS74ND	ETS70D1N-ETS74DI	476420ES
ASTON DB7 Convertible 3.2		01/96→		RUN72D	MAG74D	ETS74ND	ETS70D1N-ETS74DI	476420ES
ASTON DB7 Convertible 5.9		07/99→10/03		RUN72D	MAG74D	ETS74ND	ETS70D1N-ETS74DI	476420ES
ASTON DB7 Convertible 5.9		03/99→		RUN95D				
ASTON DB9 Coupe 4.2 V8		06/05→		RUN95D		ETS92ND-ETS95D1N		434440ES
ASTON DB9 Coupe 5.9 V12		01/04→		RUN95D		ETS92ND-ETS95D1N		434440ES
ASTON DB9 Convertible 5.9		04/04→		RUN95D		ETS92ND-ETS95D1N		434440ES
ASTON V8 Coupe 4.3		10/05→		RUN95D		ETS92ND-ETS95D1N		434440ES
ASTON V8 Vantage Roadster 4.3		04/07→		RUN95D		ETS92ND-ETS95D1N		434440ES
ASTON VANQUISH 6.0 V12	(R2_)	09/01→		RUN95D		ETS92ND-ETS95D1N		434440ES
ASTON VIRAGE Convertible 5.3		09/90→12/95			MAG82D	ETS80ND		
ASTON VIRAGE Convertible 5.3		01/97→12/00			MAG82D	ETS80ND		
ASTON VIRAGE Convertible 6.3		09/90→12/95			MAG82D	ETS80ND		
ASTON VIRAGE Estate 5.3		01/93→12/95			MAG82D	ETS80ND		

	Design		START	RUN	MAGIS	ETS	ETS alternative	ES
ALFA ROMEO								
ASTON VIRAGE Estate 6.3		01/94→12/95			MAG82D	ETS80ND		
ASTON VIRAGE Saloon 5.3		01/94→12/95			MAG82D	ETS80ND		
ASTON VIRAGE Saloon 6.3		01/95→12/95			MAG82D	ETS80ND		
ASTON VIRAGE Coupe 5.3		10/92→			MAG82D	ETS80ND		
ASTON VIRAGE LIMITED EDITION 5.3		01/95→12/95			MAG82D	ETS80ND		
AUDI								
A2 1.4	(8Z0)	02/00→08/05	AGM70D	RUN72D	MAG74D	ETS74ND	ETS70D1N-ETS74DI	476420ES
A2 1.6 FSI	(8Z0)	05/02→08/05	AGM70D	RUN72D	MAG74D	ETS74ND	ETS70D1N-ETS74DI	476420ES
A2 1.2 TDI	(8Z0)	03/01→08/05	AGM70D	RUN72D	MAG74D	ETS74ND	ETS70D1N-ETS74DI	476420ES
A3 1.4 TFSI	Stop/Start, RB	05/09→	AGM70D					
A3 1.6	(8L1)	09/96→08/00		RUN50D				
A3 1.6	(8L1)	08/00→		RUN50D				
A3 1.6 TDI	Stop/Start, RB	05/09→	AGM70D					
A3 1.8	(8L1)	09/96→		RUN62D	MAG62D	ETS62ND	ETS60D3N	438320ES
A3 1.8 quattro	(8L1)	08/98→		RUN62D	MAG62D	ETS62ND	ETS60D3N	438320ES
A3 1.8 T	(8L1)	12/96→		RUN62D	MAG62D	ETS62ND	ETS60D3N	438320ES
A3 1.8 T quattro	(8L1)	12/96→		RUN62D	MAG62D	ETS62ND	ETS60D3N	438320ES
A3 1.8 T	(8L1)	12/98→		RUN62D	MAG62D	ETS62ND	ETS60D3N	438320ES
A3 1.8 T quattro	(8L1)	10/98→		RUN62D	MAG62D	ETS62ND	ETS60D3N	438320ES
A3 S3 quattro	(8L1)	03/99→		RUN72D	MAG74D	ETS74ND	ETS70D1N-ETS74DI	476420ES
A3 S3 quattro	(8L1)	10/01→		RUN72D	MAG74D	ETS74ND	ETS70D1N-ETS74DI	476420ES
A3 1.9 TDI	(8L1)	09/96→07/01		RUN72D	MAG74D	ETS74ND	ETS70D1N-ETS74DI	476420ES
A3 1.9 TDI	(8L1)	10/00→		RUN72D	MAG74D	ETS74ND	ETS70D1N-ETS74DI	476420ES
A3 1.9 TDI	(8L1)	08/97→07/01		RUN72D	MAG74D	ETS74ND	ETS70D1N-ETS74DI	476420ES
A3 1.9 TDI	(8L1)	08/00→		RUN72D	MAG74D	ETS74ND	ETS70D1N-ETS74DI	476420ES
A3 1.9 TDI quattro	(8L1)	08/00→		RUN72D	MAG74D	ETS74ND	ETS70D1N-ETS74DI	476420ES
A3 1.6	(8P1)	05/03→		RUN50D				
A3 1.6 FSI	(8P1)	08/03→		RUN62D				
A3 1.8 T	(8P1)	08/06→		RUN62D				
A3 1.8 TFSI	(8P1)	11/06→		RUN62D				
A3 2.0 FSI	(8P1)	05/03→		RUN62D				
A3 2.0	(8P1)	06/06→		RUN62D				
A3 2.0 TFSI	(8P1)	09/04→		RUN62D				
A3 2.0 TFSI quattro	(8P1)	09/04→		RUN62D				
A3 S3 quattro	(8P1)	02/07→		RUN72D				
A3 S3 quattro	(8P1)	11/06→		RUN72D	MAG74D	ETS74ND	ETS70D1N-ETS74DI	476420ES
A3 3.2 V6 quattro	(8P1)	07/03→		RUN72D	MAG74D	ETS74ND	ETS70D1N-ETS74DI	476420ES
A3 1.9 TDI	(8P1)	05/03→		RUN72D	MAG74D	ETS74ND	ETS70D1N-ETS74DI	476420ES
A3 2.0 TDI	(8P1)	05/03→		RUN72D	MAG74D	ETS74ND	ETS70D1N-ETS74DI	476420ES
A3 2.0 TDI quattro	(8P1)	05/03→		RUN72D	MAG74D	ETS74ND	ETS70D1N-ETS74DI	476420ES
A3 2.0 TDI	(8P1)	06/05→		RUN72D	MAG74D	ETS74ND	ETS70D1N-ETS74DI	476420ES
A3 2.0 TDI quattro	(8P1)	01/06→		RUN72D	MAG74D	ETS74ND	ETS70D1N-ETS74DI	476420ES
A3 2.0 TDI 16V	(8P1)	05/03→		RUN72D	MAG74D	ETS74ND	ETS70D1N-ETS74DI	476420ES
A3 2.0 TDI 16V quattro	(8P1)	08/04→		RUN72D	MAG74D	ETS74ND	ETS70D1N-ETS74DI	476420ES
A3 2.0 TDI	(8P1)	03/06→		RUN72D	MAG74D	ETS74ND	ETS70D1N-ETS74DI	476420ES
A3 2.0 TDI quattro	(8P1)	03/06→		RUN72D	MAG74D	ETS74ND	ETS70D1N-ETS74DI	476420ES

	Design		START	RUN	MAGIS	ETS	ETS alternative	ES
AUDI								
A3 Sportback 1.4 TFSI	Stop/Start , RB	05/09→	AGM70D					
A3 Sportback 1.6	(8PA)	09/04→		RUN62D				
A3 Sportback 1.6 TDI	Stop/Start , RB	05/09→	AGM70D					
A3 Sportback 1.6 FSI	(8PA)	09/04→		RUN62D				
A3 Sportback 1.8 TFSI	(8PA)	11/06→		RUN62D				
A3 Sportback 2.0 FSI	(8PA)	09/04→		RUN62D				
A3 Sportback 2.0 TFSI	(8PA)	09/04→		RUN72D	MAG74D	ETS74ND	ETS70D1N-ETS74DI	476420ES
A3 Sportback 2.0 TFSI quattro	(8PA)	09/04→		RUN72D	MAG74D	ETS74ND	ETS70D1N-ETS74DI	476420ES
A3 Sportback S3 quattro	(8PA)	07/08→		RUN72D				
A3 Sportback S3 quattro	(8PA)	06/08→		RUN72D				
A3 Sportback 3.2 V6 quattro	(8PA)	09/04→		RUN72D	MAG74D	ETS74ND	ETS70D1N-ETS74DI	476420ES
A3 Sportback 1.9 TDI	(8PA)	09/04→		RUN72D	MAG74D	ETS74ND	ETS70D1N-ETS74DI	476420ES
A3 Sportback 2.0 TDI	(8PA)	09/04→		RUN72D	MAG74D	ETS74ND	ETS70D1N-ETS74DI	476420ES
A3 Sportback 2.0 TDI	(8PA)	06/05→		RUN72D	MAG74D	ETS74ND	ETS70D1N-ETS74DI	476420ES
A3 Sportback 2.0 TDI quattro	(8PA)	01/06→		RUN72D	MAG74D	ETS74ND	ETS70D1N-ETS74DI	476420ES
A3 Sportback 2.0 TDI 16V	(8PA)	09/04→		RUN72D	MAG74D	ETS74ND	ETS70D1N-ETS74DI	476420ES
A3 Sportback 2.0 TDI 16V quattro	(8PA)	11/05→		RUN72D	MAG74D	ETS74ND	ETS70D1N-ETS74DI	476420ES
A3 Sportback 2.0 TDI	(8PA)	03/06→		RUN72D	MAG74D	ETS74ND	ETS70D1N-ETS74DI	476420ES
A3 Sportback 2.0 TDI quattro	(8PA)	03/06→		RUN72D	MAG74D	ETS74ND	ETS70D1N-ETS74DI	476420ES
A3 Convertible 2.0 TFSI		04/08→		RUN62D				
A3 Convertible 1.6 TDI	Stop/Start , RB , B	05/09→	AGM70D					
A3 Convertible 1.9 TDI		04/08→		RUN72D				
A3 Convertible 2.0 TDI		04/08→		RUN72D				
A3 Convertible 2.0 TDI		04/08→		RUN72D				
A4 1.6	(8D2, B5)	01/95→07/00		RUN62D	MAG62D	ETS62ND	ETS60D3N	438320ES
A4 1.6	(8D2, B5)	07/00→11/00		RUN62D	MAG62D	ETS62ND	ETS60D3N	438320ES
A4 1.8	(8D2, B5)	04/95→11/00		RUN62D	MAG62D	ETS62ND	ETS60D3N	438320ES
A4 1.8 quattro	(8D2, B5)	07/95→11/00		RUN62D	MAG62D	ETS62ND	ETS60D3N	438320ES
A4 1.8	(8D2, B5)	01/95→11/00		RUN62D	MAG62D	ETS62ND	ETS60D3N	438320ES
A4 1.8 quattro	(8D2, B5)	01/95→11/00		RUN62D	MAG62D	ETS62ND	ETS60D3N	438320ES
A4 1.8	(8D2, B5)	01/95→11/00		RUN62D	MAG62D	ETS62ND	ETS60D3N	438320ES
A4 1.8 T	(8D2, B5)	01/95→11/00		RUN62D	MAG62D	ETS62ND	ETS60D3N	438320ES
A4 1.8 T quattro	(8D2, B5)	01/95→11/00		RUN62D	MAG62D	ETS62ND	ETS60D3N	438320ES
A4 1.8 T	(8D2, B5)	12/97→11/00		RUN62D	MAG62D	ETS62ND	ETS60D3N	438320ES
A4 1.8 T quattro	(8D2, B5)	12/97→11/00		RUN62D	MAG62D	ETS62ND	ETS60D3N	438320ES
A4 2.0 quattro TDI		11/07→	AGM70D					
A4 2.0 quattro TFSI	Stop/Start , RB , B	06/08→	AGM70D					
A4 2.4	(8D2, B5)	08/97→11/00		RUN72D	MAG74D	ETS74ND	ETS70D1N-ETS74DI	476420ES
A4 2.4 quattro	(8D2, B5)	08/97→11/00		RUN72D	MAG74D	ETS74ND	ETS70D1N-ETS74DI	476420ES
A4 2.4	(8D2, B5)	03/97→11/00		RUN72D	MAG74D	ETS74ND	ETS70D1N-ETS74DI	476420ES
A4 2.4 quattro	(8D2, B5)	03/97→11/00		RUN72D	MAG74D	ETS74ND	ETS70D1N-ETS74DI	476420ES
A4 2.6	(8D2, B5)	01/95→11/00			MAG82D	ETS80ND		
A4 2.6 quattro	(8D2, B5)	01/95→11/00			MAG82D	ETS80ND		
A4 S4 quattro	(8D2, B5)	09/97→11/00		RUN95D		ETS92ND-ETS95D1N		434440ES
A4 2.8	(8D2, B5)	09/95→07/97			MAG82D	ETS80ND		
A4 2.8 quattro	(8D2, B5)	01/95→07/97			MAG82D	ETS80ND		
A4 2.8	(8D2, B5)	10/96→11/00			MAG82D	ETS80ND		

	Design		START	RUN	MAGIS	ETS	ETS alternative	ES
AUDI								
A4 2.8 quattro	(8D2, B5)	10/96→11/00			MAG82D	ETS80ND		
A4 2.5 TDI	(8D2, B5)	09/97→11/00		RUN72D	MAG74D	ETS74ND	ETS70D1N-ETS74DI	476420ES
A4 2.5 TDI quattro	(8D2, B5)	09/97→11/00		RUN95D		ETS92ND-ETS95D1N		434440ES
A4 2.5 D	(8D2, B5)	10/00→05/03		RUN72D	MAG74D	ETS74ND	ETS70D1N-ETS74DI	476420ES
A4 Avant 1.6	(8D5, B5)	03/96→07/00		RUN62D	MAG62D	ETS62ND	ETS60D3N	438320ES
A4 Avant 1.6	(8D5, B5)	07/00→09/01		RUN62D	MAG62D	ETS62ND	ETS60D3N	438320ES
A4 Avant 1.8	(8D5, B5)	07/95→09/01		RUN62D	MAG62D	ETS62ND	ETS60D3N	438320ES
A4 Avant 1.8 quattro	(8D5, B5)	07/95→09/01		RUN62D	MAG62D	ETS62ND	ETS60D3N	438320ES
A4 Avant 1.8	(8D5, B5)	02/96→09/01		RUN62D	MAG62D	ETS62ND	ETS60D3N	438320ES
A4 Avant 1.8 quattro	(8D5, B5)	01/96→09/01		RUN62D	MAG62D	ETS62ND	ETS60D3N	438320ES
A4 Avant 1.8 T	(8D5, B5)	03/96→09/01		RUN62D	MAG62D	ETS62ND	ETS60D3N	438320ES
A4 Avant 1.8 T quattro	(8D5, B5)	01/96→09/01		RUN62D	MAG62D	ETS62ND	ETS60D3N	438320ES
A4 Avant 1.8 T	(8D5, B5)	12/97→09/01		RUN62D	MAG62D	ETS62ND	ETS60D3N	438320ES
A4 Avant 1.8 T quattro	(8D5, B5)	12/97→09/01		RUN62D	MAG62D	ETS62ND	ETS60D3N	438320ES
A4 Avant 2.0 quattro TDI	Stop/Start , RB , B	04/08→	AGM70D					
A4 Avant 2.0 quattro TFFSI	Stop/Start , RB , B	06/08→	AGM70D					
A4 Avant 2.4	(8D5, B5)	08/97→09/01		RUN72D	MAG74D	ETS74ND	ETS70D1N-ETS74DI	476420ES
A4 Avant 2.4 quattro	(8D5, B5)	08/97→09/01		RUN72D	MAG74D	ETS74ND	ETS70D1N-ETS74DI	476420ES
A4 Avant 2.4	(8D5, B5)	03/97→09/01		RUN72D	MAG74D	ETS74ND	ETS70D1N-ETS74DI	476420ES
A4 Avant 2.4 quattro	(8D5, B5)	03/97→09/01		RUN72D	MAG74D	ETS74ND	ETS70D1N-ETS74DI	476420ES
A4 Avant 2.6	(8D5, B5)	02/96→09/01			MAG82D	ETS80ND		
A4 Avant 2.6 quattro	(8D5, B5)	01/96→09/01			MAG82D	ETS80ND		
A4 Avant S4 quattro	(8D5, B5)	09/97→09/01		RUN72D	MAG74D	ETS74ND	ETS70D1N-ETS74DI	476420ES
A4 Avant RS4 quattro	(8D5, B5)	05/00→09/01		RUN95D		ETS92ND-ETS95D1N		434440ES
A4 Avant 2.8	(8D5, B5)	03/96→09/96			MAG82D	ETS80ND		
A4 Avant 2.8 quattro	(8D5, B5)	01/96→09/96			MAG82D	ETS80ND		
A4 Avant 2.8	(8D5, B5)	03/99→09/00			MAG82D	ETS80ND		
A4 Avant 2.8 quattro	(8D5, B5)	03/99→09/00			MAG82D	ETS80ND		
A4 Avant 2.8	(8D5, B5)	10/96→09/01			MAG82D	ETS80ND		
A4 Avant 2.8 quattro	(8D5, B5)	10/96→09/01			MAG82D	ETS80ND		
A4 Avant 2.8 quattro	(8D5, B5)	10/00→10/01			MAG82D	ETS80ND		
A4 Avant 1.9 TDI	(8D5, B5)	03/96→09/01		RUN72D	MAG74D	ETS74ND	ETS70D1N-ETS74DI	476420ES
A4 Avant 1.9 TDI	(8D5, B5)	02/96→09/01		RUN72D	MAG74D	ETS74ND	ETS70D1N-ETS74DI	476420ES
A4 Avant 1.9 TDI	(8D5, B5)	02/96→09/01		RUN72D	MAG74D	ETS74ND	ETS70D1N-ETS74DI	476420ES
A4 Avant 1.9 TDI quattro	(8D5, B5)	09/96→09/01		RUN72D	MAG74D	ETS74ND	ETS70D1N-ETS74DI	476420ES
A4 Avant 1.9 TDI	(8D5, B5)	03/00→09/01		RUN72D	MAG74D	ETS74ND	ETS70D1N-ETS74DI	476420ES
A4 Avant 1.9 TDI quattro	(8D5, B5)	03/00→09/01		RUN72D	MAG74D	ETS74ND	ETS70D1N-ETS74DI	476420ES
A4 Avant 2.5 TDI	(8D5, B5)	09/97→09/01		RUN72D	MAG74D	ETS74ND	ETS70D1N-ETS74DI	476420ES
A4 Avant 2.5 TDI quattro	(8D5, B5)	09/97→09/01		RUN72D	MAG74D	ETS74ND	ETS70D1N-ETS74DI	476420ES
A4 Avant 1.9 DUO	(8D5, B5)	03/98→09/01		RUN72D	MAG74D	ETS74ND	ETS70D1N-ETS74DI	476420ES
A4 1.6	(8E2, B6)	11/00→12/04		RUN62D	MAG62D	ETS62ND	ETS60D3N	438320ES
A4 1.8 T	(8E2, B6)	11/00→07/02		RUN62D	MAG62D	ETS62ND	ETS60D3N	438320ES
A4 1.8 T quattro	(8E2, B6)	11/00→07/02		RUN72D	MAG74D	ETS74ND	ETS70D1N-ETS74DI	476420ES
A4 1.8 T	(8E2, B6)	07/02→12/04		RUN62D	MAG62D	ETS62ND	ETS60D3N	438320ES
A4 1.8 T quattro	(8E2, B6)	07/02→12/04		RUN72D	MAG74D	ETS74ND	ETS70D1N-ETS74DI	476420ES
A4 1.8 T	(8E2, B6)	07/01→12/04		RUN62D	MAG62D	ETS62ND	ETS60D3N	438320ES
A4 1.8 T quattro	(8E2, B6)	07/01→12/04		RUN72D	MAG74D	ETS74ND	ETS70D1N-ETS74DI	476420ES

	Design		START	RUN	MAGIS	ETS	ETS alternative	ES
AUDI								
A4 1.8 T	(8E2, B6)	11/02→12/04		RUN62D	MAG62D	ETS62ND	ETS60D3N	438320ES
A4 1.8 T quattro	(8E2, B6)	11/02→12/04		RUN72D	MAG74D	ETS74ND	ETS70D1N-ETS74DI	476420ES
A4 2.0	(8E2, B6)	11/00→12/04		RUN72D	MAG74D	ETS74ND	ETS70D1N-ETS74DI	476420ES
A4 2.0 FSI	(8E2, B6)	07/02→12/04		RUN72D	MAG74D	ETS74ND	ETS70D1N-ETS74DI	476420ES
A4 2.4	(8E2, B6)	09/01→12/04		RUN72D	MAG74D	ETS74ND	ETS70D1N-ETS74DI	476420ES
A4 2.4	(8E2, B6)	09/01→12/04		RUN72D	MAG74D	ETS74ND	ETS70D1N-ETS74DI	476420ES
A4 3.0 quattro	(8E2, B6)	04/01→12/04		RUN95D		ETS92ND-ETS95D1N		434440ES
A4 3.0 quattro	(8E2, B6)	11/00→12/04		RUN95D		ETS92ND-ETS95D1N		434440ES
A4 S4 quattro	(8E2, B6)	03/03→12/04		RUN95D		ETS92ND-ETS95D1N		434440ES
A4 2.5 TDI	(8E2, B6)	08/01→07/02		RUN72D	MAG74D	ETS74ND	ETS70D1N-ETS74DI	476420ES
A4 2.5 TDI	(8E2, B6)	07/02→12/04		RUN72D	MAG74D	ETS74ND	ETS70D1N-ETS74DI	476420ES
A4 2.5 TDI quattro	(8E2, B6)	11/00→12/04		RUN95D		ETS92ND-ETS95D1N		434440ES
A4 Avant 1.6	(8E5, B6)	09/01→12/04		RUN62D	MAG62D	ETS62ND	ETS60D3N	438320ES
A4 Avant 1.8 T	(8E5, B6)	09/01→07/02		RUN62D	MAG62D	ETS62ND	ETS60D3N	438320ES
A4 Avant 1.8 T quattro	(8E5, B6)	09/01→07/02		RUN62D	MAG62D	ETS62ND	ETS60D3N	438320ES
A4 Avant 1.8 T	(8E5, B6)	07/02→12/04		RUN62D	MAG62D	ETS62ND	ETS60D3N	438320ES
A4 Avant 1.8 T quattro	(8E5, B6)	07/02→12/04		RUN62D	MAG62D	ETS62ND	ETS60D3N	438320ES
A4 Avant 1.8 T quattro	(8E5, B6)	09/01→12/04		RUN62D	MAG62D	ETS62ND	ETS60D3N	438320ES
A4 Avant 1.8 T	(8E5, B6)	11/02→12/04		RUN62D	MAG62D	ETS62ND	ETS60D3N	438320ES
A4 Avant 1.8 T quattro	(8E5, B6)	11/02→12/04		RUN62D	MAG62D	ETS62ND	ETS60D3N	438320ES
A4 Avant 2.0	(8E5, B6)	09/01→12/04		RUN72D	MAG74D	ETS74ND	ETS70D1N-ETS74DI	476420ES
A4 Avant 2.0 FSI	(8E5, B6)	07/02→12/04		RUN72D	MAG74D	ETS74ND	ETS70D1N-ETS74DI	476420ES
A4 Avant 2.4	(8E5, B6)	09/01→12/04		RUN72D	MAG74D	ETS74ND	ETS70D1N-ETS74DI	476420ES
A4 Avant 2.4	(8E5, B6)	09/01→12/04		RUN72D	MAG74D	ETS74ND	ETS70D1N-ETS74DI	476420ES
A4 Avant S4 quattro	(8E5, B6)	03/03→12/04		RUN72D	MAG74D	ETS74ND	ETS70D1N-ETS74DI	476420ES
A4 Avant S4 quattro		09/08→	AGM80D					
A4 Avant 1.9 TDI	(8E5, B6)	11/01→12/04		RUN72D	MAG74D	ETS74ND	ETS70D1N-ETS74DI	476420ES
A4 Avant 1.9 TDI	(8E5, B6)	06/04→12/04		RUN72D	MAG74D	ETS74ND	ETS70D1N-ETS74DI	476420ES
A4 Avant 1.9 TDI	(8E5, B6)	09/01→12/04		RUN72D	MAG74D	ETS74ND	ETS70D1N-ETS74DI	476420ES
A4 Avant 1.9 TDI quattro	(8E5, B6)	11/01→12/04		RUN72D	MAG74D	ETS74ND	ETS70D1N-ETS74DI	476420ES
A4 Avant 2.5 TDI	(8E5, B6)	09/01→07/02		RUN72D	MAG74D	ETS74ND	ETS70D1N-ETS74DI	476420ES
A4 Avant 2.5 TDI	(8E5, B6)	07/02→12/04		RUN72D	MAG74D	ETS74ND	ETS70D1N-ETS74DI	476420ES
A4 Avant 2.5 TDI quattro	(8E5, B6)	09/01→12/04		RUN72D	MAG74D	ETS74ND	ETS70D1N-ETS74DI	476420ES
A4 Convertible 1.8 T	(8H7, 8HE)	07/02→		RUN72D	MAG74D	ETS74ND	ETS70D1N-ETS74DI	476420ES
A4 Convertible 1.8 T quattro	(8H7, 8HE)	05/03→		RUN72D	MAG74D	ETS74ND	ETS70D1N-ETS74DI	476420ES
A4 Convertible 1.8	(8H7, 8HE)	10/02→10/05		RUN72D	MAG74D	ETS74ND	ETS70D1N-ETS74DI	476420ES
A4 Convertible 2.0	(8H7, 8HE)	09/04→12/05		RUN72D	MAG74D	ETS74ND	ETS70D1N-ETS74DI	476420ES
A4 Convertible 2.0 TFSI 16V	(8H7, 8HE)	01/06→		RUN72D	MAG74D	ETS74ND	ETS70D1N-ETS74DI	476420ES
A4 Convertible 2.4	(8H7, 8HE)	04/02→12/05		RUN72D	MAG74D	ETS74ND	ETS70D1N-ETS74DI	476420ES
A4 Convertible 2.4	(8H7, 8HE)	04/02→12/05		RUN72D	MAG74D	ETS74ND	ETS70D1N-ETS74DI	476420ES
A4 Convertible 3.0 quattro	(8H7, 8HE)	05/03→12/05		RUN72D	MAG74D	ETS74ND	ETS70D1N-ETS74DI	476420ES
A4 Convertible 3.2 FSI	(8H7, 8HE)	01/06→		RUN72D	MAG74D	ETS74ND	ETS70D1N-ETS74DI	476420ES
A4 Convertible 3.2 FSI quattro	(8H7, 8HE)	01/06→		RUN72D	MAG74D	ETS74ND	ETS70D1N-ETS74DI	476420ES
A4 Convertible S4 quattro	(8H7, 8HE)	03/04→		RUN95D		ETS92ND-ETS95D1N		434440ES
A4 Convertible RS4 quattro	(8H7, 8HE)	06/06→				ETS110D1N		
A4 Convertible 2.0 TDI	(8H7, 8HE)	01/06→		RUN72D				
A4 Convertible 2.0 TDI	(8H7, 8HE)	01/06→		RUN72D				

	Design		START	RUN	MAGIS	ETS	ETS alternative	ES
AUDI								
A4 Convertible 2.5 TDI	(8H7, 8HE)	08/02→12/05		RUN72D	MAG74D	ETS74ND	ETS70D1N-ETS74DI	476420ES
A4 Convertible 2.7 TDI	(8H7, 8HE)	06/06→		RUN95D		ETS92ND-ETS95D1N		434440ES
A4 Convertible 3.0 TDI quattro	(8H7, 8HE)	01/06→		RUN95D		ETS92ND-ETS95D1N		434440ES
A4 Convertible 3.0 TDI quattro	(8H7, 8HE)	01/06→		RUN95D		ETS92ND-ETS95D1N		434440ES
A4 1.6	(8EC)	11/04→		RUN62D				
A4 1.8 T	(8EC)	11/04→		RUN62D				
A4 1.8 T quattro	(8EC)	11/04→		RUN72D	MAG74D	ETS74ND	ETS70D1N-ETS74DI	476420ES
A4 2.0	(8EC)	11/04→		RUN72D	MAG74D	ETS74ND	ETS70D1N-ETS74DI	476420ES
A4 2.0 FSi	(8EC)	01/05→07/05		RUN72D	MAG74D	ETS74ND	ETS70D1N-ETS74DI	476420ES
A4 2.0 TFSI	(8EC)	10/06→		RUN72D	MAG74D	ETS74ND	ETS70D1N-ETS74DI	476420ES
A4 2.0 TFSI	(8EC)	11/04→		RUN72D	MAG74D	ETS74ND	ETS70D1N-ETS74DI	476420ES
A4 2.0 TFSI quattro	(8EC)	11/04→		RUN72D	MAG74D	ETS74ND	ETS70D1N-ETS74DI	476420ES
A4 2.0 TFSI	(8EC)	06/05→		RUN72D	MAG74D	ETS74ND	ETS70D1N-ETS74DI	476420ES
A4 2.0 TFSI		06/08→	AGM80D					
A4 2.0 TFSI quattro	(8EC)	06/05→		RUN72D	MAG74D	ETS74ND	ETS70D1N-ETS74DI	476420ES
A4 2.0 TFSI quattro	Stop/Start , RB , B	06/08→	AGM80D					
A4 3.0 quattro	(8EC)	11/04→07/06		RUN95D		ETS92ND-ETS95D1N		434440ES
A4 3.0 quattro		11/07→	AGM80D					
A4 3.2 FSI	(8EC)	01/05→		RUN72D	MAG74D	ETS74ND	ETS70D1N-ETS74DI	476420ES
A4 3.2 FSI quattro	(8EC)	01/05→		RUN72D	MAG74D	ETS74ND	ETS70D1N-ETS74DI	476420ES
A4 3.2 FSI quattro		04/08→	AGM80D					
A4 S4 quattro	(8EC)	11/04→		RUN95D		ETS92ND-ETS95D1N		434440ES
A4 RS4 quattro	(8EC)	09/05→				ETS110D1N		
A4 2.0 TDI	(8EC)	09/05→09/06		RUN72D	MAG74D	ETS74ND	ETS70D1N-ETS74DI	476420ES
A4 2.0 TDi	(8EC)	11/05→10/07		RUN72D	MAG74D	ETS74ND	ETS70D1N-ETS74DI	476420ES
A4 2.0 TDI	(8EC)	11/04→		RUN72D	MAG74D	ETS74ND	ETS70D1N-ETS74DI	476420ES
A4 2.0 TDI	(8EC)	11/04→		RUN72D	MAG74D	ETS74ND	ETS70D1N-ETS74DI	476420ES
A4 2.0 TDI quattro	(8EC)	01/06→		RUN72D	MAG74D	ETS74ND	ETS70D1N-ETS74DI	476420ES
A4 2.0 TDI 16V	(8EC)	11/04→		RUN72D	MAG74D	ETS74ND	ETS70D1N-ETS74DI	476420ES
A4 2.0 TDI	(8EC)	06/06→		RUN72D	MAG74D	ETS74ND	ETS70D1N-ETS74DI	476420ES
A4 2.0 TDI quattro	(8EC)	06/06→		RUN72D	MAG74D	ETS74ND	ETS70D1N-ETS74DI	476420ES
A4 2.0 TDI	(8EC)	06/06→		RUN72D	MAG74D	ETS74ND	ETS70D1N-ETS74DI	476420ES
A4 2.0 TDI quattro	(8EC)	06/06→		RUN72D	MAG74D	ETS74ND	ETS70D1N-ETS74DI	476420ES
A4 2.5 TDI	(8EC)	11/04→05/06		RUN72D	MAG74D	ETS74ND	ETS70D1N-ETS74DI	476420ES
A4 3.0 TDI quattro	(8EC)	11/04→		RUN95D		ETS92ND-ETS95D1N		434440ES
A4 3.0 TDI quattro	(8EC)	01/06→		RUN95D		ETS92ND-ETS95D1N		434440ES
A4 Allroad 2.0 quattro, TFSI	Stop/Start , RB , B	04.2009→	AGM70D					
A4 Allroad 2.0 quattro, TDI	Stop/Start , RB , B	04.2009→	AGM70D					
A4 Avant 1.6	(8ED)	11/04→		RUN62D				
A4 Avant 1.8 T	(8ED)	11/04→		RUN62D				
A4 Avant 1.8 T quattro	(8ED)	11/04→		RUN62D				
A4 Avant 2.0	(8ED)	11/04→		RUN72D	MAG74D	ETS74ND	ETS70D1N-ETS74DI	476420ES
A4 Avant 2.0 FSi	(8ED)	01/05→07/05		RUN72D	MAG74D	ETS74ND	ETS70D1N-ETS74DI	476420ES
A4 Avant 2.0 TFSI	(8ED)	10/06→		RUN72D	MAG74D	ETS74ND	ETS70D1N-ETS74DI	476420ES
A4 Avant 2.0 TFSI	(8ED)	11/04→		RUN72D	MAG74D	ETS74ND	ETS70D1N-ETS74DI	476420ES
A4 Avant 2.0 TFSI quattro	(8ED)	11/04→		RUN72D	MAG74D	ETS74ND	ETS70D1N-ETS74DI	476420ES
A4 Avant 2.0 TFSI	(8ED)	06/05→		RUN72D	MAG74D	ETS74ND	ETS70D1N-ETS74DI	476420ES

	Design		START	RUN	MAGIS	ETS	ETS alternative	ES
AUDI								
A4 Avant 2.0 TFSI quattro	(8ED)	06/05→		RUN72D	MAG74D	ETS74ND	ETS70D1N-ETS74DI	476420ES
A4 Avant 3.2 FSI	(8ED)	01/05→		RUN72D	MAG74D	ETS74ND	ETS70D1N-ETS74DI	476420ES
A4 Avant 3.2 FSI quattro	(8ED)	01/05→		RUN72D	MAG74D	ETS74ND	ETS70D1N-ETS74DI	476420ES
A4 Avant S4 quattro	(8ED)	11/04→		RUN72D	MAG74D	ETS74ND	ETS70D1N-ETS74DI	476420ES
A4 Avant RS4 quattro	(8ED)	09/05→		RUN95D		ETS92ND-ETS95D1N		434440ES
A4 Avant 1.9 TDI	(8ED)	11/04→		RUN72D				
A4 Avant 2.0 TDI	(8ED)	09/05→09/06		RUN72D	MAG74D	ETS74ND	ETS70D1N-ETS74DI	476420ES
A4 Avant 2.0 TDi	(8ED)	11/05→03/08		RUN72D	MAG74D	ETS74ND	ETS70D1N-ETS74DI	476420ES
A4 Avant 2.0 TDI	(8ED)	11/04→		RUN72D	MAG74D	ETS74ND	ETS70D1N-ETS74DI	476420ES
A4 Avant 2.0 TDI	(8ED)	11/04→		RUN72D	MAG74D	ETS74ND	ETS70D1N-ETS74DI	476420ES
A4 Avant 2.0 TDI quattro	(8ED)	01/06→		RUN72D				
A4 Avant 2.0 TDI	(8ED)	06/06→		RUN72D				
A4 Avant 2.0 TDI quattro	(8ED)	06/06→		RUN72D				
A4 Avant 2.0 TDI	(8ED)	06/06→		RUN72D				
A4 Avant 2.0 TDI quattro	(8ED)	06/06→		RUN72D				
A4 Avant 2.5 TDI	(8ED)	11/04→05/06		RUN72D	MAG74D	ETS74ND	ETS70D1N-ETS74DI	476420ES
A4 Avant 3.0 TDI quattro	(8ED)	11/04→		RUN95D		ETS92ND-ETS95D1N		434440ES
A4 Avant 3.0 TDI quattro	(8ED)	01/06→		RUN95D		ETS92ND-ETS95D1N		434440ES
A4 1.8 TFSI	(8K2)	01/08→		RUN72D				
A4 1.8 TFSI quattro	(8K2)	09/08→		RUN72D	MAG74D	ETS74ND	ETS70D1N-ETS74DI	476420ES
A4 1.8 TFSI								
A4 3.2 FSI	(8K2)	09/08→		RUN72D				
A4 3.2 FSI quattro	(8K2)	11/07→		RUN72D				
A4 S4 quattro	(8K2)	11/08→		RUN95D				
A4 2.7 TDI	(8K2)	11/07→		RUN95D		ETS92ND-ETS95D1N		434440ES
A4 2.7 TDI	(8K2)	11/07→		RUN95D		ETS92ND-ETS95D1N		434440ES
A4 3.0 TDI quattro	(8K2)	06/08→		RUN95D				
A4 3.0 TDI quattro	(8K2)	11/07→		RUN95D		ETS92ND-ETS95D1N		434440ES
A4 Avant 1.8 TFSI	(8K5)	04/08→		RUN72D				
A4 Avant 1.8 TFSI	(8K5)	04/08→		RUN72D				
A4 Avant 1.8 TFSI quattro	(8K5)	09/08→		RUN72D				
A4 Avant 2.0 quattro TFSI	Stop/Start , RB , B	06/08→	AGM70D					
A4 Avant 2.0 quattro TDI	Stop/Start , RB , B	04/08→	AGM70D					
A4 Avant S4 quattro	(8K5)	11/08→		RUN72D				
A4 Avant 3.2 FSI	(8K5)	09/08→		RUN72D				
A4 Avant 3.2 FSI quattro	(8K5)	04/08→		RUN72D				
A4 Avant 3.0 TDI quattro	(8K5)	06/08→		RUN95D				
A4 Avant 3.0 TDI quattro	(8K5)	04/08→		RUN95D				
A5 1.8 TFSI	(8T)	05/09→		RUN95D				
A5 1.8 TFSI	(8T)	10/07→	AGM70D	RUN95D		ETS92ND-ETS95D1N		434440ES
A5 3.2 FSI	(8T)	06/07→				ETS110D1N		
A5 3.2 FSI quattro	(8T)	06/07→	AGM70D			ETS110D1N		
A5 S5 quattro	(8T)	06/07→	AGM70D			ETS110D1N		
A5 2.7 TDI	(8T)	09/07→	AGM70D			ETS110D1N		
A5 2.7 TDI	(8T)	06/07→	AGM70D			ETS110D1N		
A5 3.0 TDI quattro	(8T)	03/08→				ETS110D1N		
A5 3.0 TDI quattro	(8T)	06/07→	AGM70D			ETS110D1N		

	Design		START	RUN	MAGIS	ETS	ETS alternative	ES
AUDI								
A5 Sportback 1.8 TFSI		11/09→		RUN95D				
A5 Sportback 2.0 quattro,TFSI	Stop/Start , RB , B	09/09→	AGM70D					
A5 Sportback 2.0 TDI	Stop/Start , RB , B	09/09→	AGM70D					
A5 Sportback S5 quattro		01/10→				ETS110D1N		
A5 Sportback 3.2 FSI quattro		09/09→	AGM70D	RUN95D				
A5 Sportback 2.7 TDI		09/09→	AGM70D	RUN95D				
A5 Sportback 2.7 TDI		09/09→	AGM70D	RUN95D				
A5 Sportback 3.0 TDI quattro		09/09→	AGM70D	RUN95D				
A5 Convertible 1.8 TFSI	(8F)	09/09→		RUN95D				
A5 Convertible 2.0 quattro,TFSI	Stop/Start , RB , B	03/09→	AGM70D					
A5 Convertible 2.0 quattro TDI	Stop/Start , RB , B	05/09→	AGM70D					
A5 Convertible S5 quattro	(8F)	06/09→	AGM70D	RUN95D				
A5 Convertible 3.2 FSI	(8F)	03/09→	AGM80D	RUN95D				
A5 Convertible 3.2 FSI quattro	(8F)	03/09→	AGM80D	RUN95D				
A5 Convertible 2.7 TDI	(8F)	05/09→		RUN95D				
A5 Convertible 2.7 TDI	(8F)	03/09→	AGM80D	RUN95D				
A5 Convertible 3.0 TDI quattro	(8F)	03/09→	AGM90D	RUN95D				
A6 1.8	(4A, C4)	12/95→10/97		RUN72D	MAG74D	ETS74ND	ETS70D1N-ETS74DI	476420ES
A6 1.8 quattro	(4A, C4)	12/95→10/97		RUN72D	MAG74D	ETS74ND	ETS70D1N-ETS74DI	476420ES
A6 2.0	(4A, C4)	06/94→10/97		RUN72D	MAG74D	ETS74ND	ETS70D1N-ETS74DI	476420ES
A6 2.0	(4A, C4)	06/94→10/97		RUN72D	MAG74D	ETS74ND	ETS70D1N-ETS74DI	476420ES
A6 2.0 16V	(4A, C4)	06/94→10/97		RUN72D	MAG74D	ETS74ND	ETS70D1N-ETS74DI	476420ES
A6 2.0 16V quattro	(4A, C4)	06/94→10/97		RUN72D	MAG74D	ETS74ND	ETS70D1N-ETS74DI	476420ES
A6 2.3	(4A, C4)	06/94→12/95		RUN72D	MAG74D	ETS74ND	ETS70D1N-ETS74DI	476420ES
A6 2.3 quattro	(4A, C4)	06/94→12/95		RUN72D	MAG74D	ETS74ND	ETS70D1N-ETS74DI	476420ES
A6 2.4	(4A, C4)	07/95→06/96		RUN95D		ETS92ND-ETS95D1N		434440ES
A6 2.6	(4A, C4)	06/94→10/97		RUN72D	MAG74D	ETS74ND	ETS70D1N-ETS74DI	476420ES
A6 2.6	(4A, C4)	06/94→10/97		RUN72D	MAG74D	ETS74ND	ETS70D1N-ETS74DI	476420ES
A6 2.6 quattro	(4A, C4)	06/94→10/97		RUN95D		ETS92ND-ETS95D1N		434440ES
A6 2.8	(4A, C4)	06/94→10/97		RUN72D	MAG74D	ETS74ND	ETS70D1N-ETS74DI	476420ES
A6 2.8 quattro	(4A, C4)	06/94→10/97		RUN95D		ETS92ND-ETS95D1N		434440ES
A6 2.8	(4A, C4)	12/95→10/97		RUN72D	MAG74D	ETS74ND	ETS70D1N-ETS74DI	476420ES
A6 2.8 quattro	(4A, C4)	12/95→10/97		RUN95D		ETS92ND-ETS95D1N		434440ES
A6 S6 Turbo quattro	(4A, C4)	06/94→10/97		RUN95D		ETS92ND-ETS95D1N		434440ES
A6 S6 4.2 quattro	(4A, C4)	06/94→10/97		RUN95D		ETS92ND-ETS95D1N		434440ES
A6 S6 Plus quattro	(4A, C4)	04/96→10/97		RUN95D		ETS92ND-ETS95D1N		434440ES
A6 1.9 TDI	(4A, C4)	06/94→10/97		RUN72D	MAG74D	ETS74ND	ETS70D1N-ETS74DI	476420ES
A6 2.5 TDI	(4A, C4)	01/95→10/97		RUN95D		ETS92ND-ETS95D1N		434440ES
A6 2.5 TDI	(4A, C4)	06/94→10/97		RUN95D		ETS92ND-ETS95D1N		434440ES
A6 2.5 TDI	(4A, C4)	08/94→10/97		RUN95D		ETS92ND-ETS95D1N		434440ES
A6 2.5 TDI quattro	(4A, C4)	10/95→10/97		RUN95D		ETS92ND-ETS95D1N		434440ES
A6 Avant 1.8	(4A, C4)	12/95→12/97		RUN62D	MAG62D	ETS62ND	ETS60D3N	438320ES
A6 Avant 1.8 quattro	(4A, C4)	12/95→12/97		RUN72D	MAG74D	ETS74ND	ETS70D1N-ETS74DI	476420ES
A6 Avant 2.0	(4A, C4)	06/94→12/97		RUN72D	MAG74D	ETS74ND	ETS70D1N-ETS74DI	476420ES
A6 Avant 2.0	(4A, C4)	06/94→12/97		RUN72D	MAG74D	ETS74ND	ETS70D1N-ETS74DI	476420ES
A6 Avant 2.0 16V	(4A, C4)	06/94→12/97		RUN72D	MAG74D	ETS74ND	ETS70D1N-ETS74DI	476420ES
A6 Avant 2.0 16V quattro	(4A, C4)	06/94→12/97		RUN72D	MAG74D	ETS74ND	ETS70D1N-ETS74DI	476420ES

	Design		START	RUN	MAGIS	ETS	ETS alternative	ES
AUDI								
A6 Avant 2.3	(4A, C4)	06/94→12/95		RUN72D	MAG74D	ETS74ND	ETS70D1N-ETS74DI	476420ES
A6 Avant 2.3 quattro	(4A, C4)	06/94→12/95		RUN72D	MAG74D	ETS74ND	ETS70D1N-ETS74DI	476420ES
A6 Avant 2.6	(4A, C4)	06/94→02/97		RUN72D	MAG74D	ETS74ND	ETS70D1N-ETS74DI	476420ES
A6 Avant 2.6	(4A, C4)	06/94→12/97		RUN72D	MAG74D	ETS74ND	ETS70D1N-ETS74DI	476420ES
A6 Avant 2.6 quattro	(4A, C4)	06/94→12/97		RUN72D	MAG74D	ETS74ND	ETS70D1N-ETS74DI	476420ES
A6 Avant 2.8	(4A, C4)	06/94→12/97		RUN72D	MAG74D	ETS74ND	ETS70D1N-ETS74DI	476420ES
A6 Avant 2.8 quattro	(4A, C4)	06/94→12/97		RUN72D	MAG74D	ETS74ND	ETS70D1N-ETS74DI	476420ES
A6 Avant 2.8	(4A, C4)	12/95→12/97		RUN72D	MAG74D	ETS74ND	ETS70D1N-ETS74DI	476420ES
A6 Avant 2.8 quattro	(4A, C4)	12/95→12/97		RUN72D	MAG74D	ETS74ND	ETS70D1N-ETS74DI	476420ES
A6 Avant S6 Turbo quattro	(4A, C4)	06/94→12/97		RUN95D		ETS92ND-ETS95D1N		434440ES
A6 Avant S6 4.2 quattro	(4A, C4)	06/94→12/97		RUN95D		ETS92ND-ETS95D1N		434440ES
A6 Avant S6 Plus quattro	(4A, C4)	04/96→12/97		RUN95D		ETS92ND-ETS95D1N		434440ES
A6 Avant 1.9 TDI	(4A, C4)	06/94→12/97		RUN72D	MAG74D	ETS74ND	ETS70D1N-ETS74DI	476420ES
A6 Avant 2.5 TDI	(4A, C4)	01/95→12/97		RUN95D		ETS92ND-ETS95D1N		434440ES
A6 Avant 2.5 TDI	(4A, C4)	06/94→12/97		RUN95D		ETS92ND-ETS95D1N		434440ES
A6 Avant 2.5 TDI	(4A, C4)	08/94→12/97		RUN95D		ETS92ND-ETS95D1N		434440ES
A6 Avant 2.5 TDI quattro	(4A, C4)	07/95→12/97		RUN95D		ETS92ND-ETS95D1N		434440ES
A6 1.8	(4B, C5)	05/97→01/05		RUN72D	MAG74D	ETS74ND	ETS70D1N-ETS74DI	476420ES
A6 1.8	(4B, C5)	07/97→01/05		RUN72D	MAG74D	ETS74ND	ETS70D1N-ETS74DI	476420ES
A6 1.8 T	(4B, C5)	01/97→01/05		RUN72D	MAG74D	ETS74ND	ETS70D1N-ETS74DI	476420ES
A6 1.8 T quattro	(4B, C5)	02/97→01/05		RUN72D	MAG74D	ETS74ND	ETS70D1N-ETS74DI	476420ES
A6 1.8 T	(4B, C5)	12/97→01/05		RUN72D	MAG74D	ETS74ND	ETS70D1N-ETS74DI	476420ES
A6 1.8 T quattro	(4B, C5)	12/97→01/05		RUN72D	MAG74D	ETS74ND	ETS70D1N-ETS74DI	476420ES
A6 2.0	(4B, C5)	08/01→01/05		RUN72D	MAG74D	ETS74ND	ETS70D1N-ETS74DI	476420ES
A6 2.4	(4B, C5)	07/98→01/05		RUN95D		ETS92ND-ETS95D1N		434440ES
A6 2.4	(4B, C5)	02/97→01/05		RUN95D		ETS92ND-ETS95D1N		434440ES
A6 2.4 quattro	(4B, C5)	08/98→07/99		RUN95D		ETS92ND-ETS95D1N		434440ES
A6 2.4	(4B, C5)	02/97→01/05		RUN95D		ETS92ND-ETS95D1N		434440ES
A6 2.4 quattro	(4B, C5)	02/97→01/05		RUN95D		ETS92ND-ETS95D1N		434440ES
A6 2.4	(4B, C5)	02/97→01/05		RUN95D		ETS92ND-ETS95D1N		434440ES
A6 2.4 quattro	(4B, C5)	02/97→01/05		RUN95D		ETS92ND-ETS95D1N		434440ES
A6 2.4	(4B, C5)	08/01→01/05		RUN95D		ETS92ND-ETS95D1N		434440ES
A6 2.4 quattro	(4B, C5)	08/01→01/05		RUN95D		ETS92ND-ETS95D1N		434440ES
A6 2.7 T	(4B, C5)	02/99→01/05		RUN95D		ETS92ND-ETS95D1N		434440ES
A6 2.7 T quattro	(4B, C5)	12/97→01/05		RUN95D		ETS92ND-ETS95D1N		434440ES
A6 2.7 T quattro	(4B, C5)	08/01→01/05		RUN95D		ETS92ND-ETS95D1N		434440ES
A6 2.8	(4B, C5)	10/97→07/98		RUN72D	MAG74D	ETS74ND	ETS70D1N-ETS74DI	476420ES
A6 2.8 quattro	(4B, C5)	01/98→04/00		RUN95D		ETS92ND-ETS95D1N		434440ES
A6 2.8	(4B, C5)	07/99→01/05		RUN72D	MAG74D	ETS74ND	ETS70D1N-ETS74DI	476420ES
A6 2.8 quattro	(4B, C5)	07/99→05/01		RUN95D		ETS92ND-ETS95D1N		434440ES
A6 2.8	(4B, C5)	02/97→01/05		RUN72D	MAG74D	ETS74ND	ETS70D1N-ETS74DI	476420ES
A6 2.8 quattro	(4B, C5)	02/97→01/05		RUN95D		ETS92ND-ETS95D1N		434440ES
A6 2.8 24V	(4B, C5)	05/97→07/99		RUN95D		ETS92ND-ETS95D1N		434440ES
A6 3.0	(4B, C5)	08/01→01/05		RUN95D		ETS92ND-ETS95D1N		434440ES
A6 3.0 quattro	(4B, C5)	08/01→01/05		RUN72D	MAG74D	ETS74ND	ETS70D1N-ETS74DI	476420ES
A6 3.7	(4B, C5)	03/99→01/05		RUN95D		ETS92ND-ETS95D1N		434440ES
A6 3.7 quattro	(4B, C5)	03/99→01/05		RUN95D		ETS92ND-ETS95D1N		434440ES

	Design		START	RUN	MAGIS	ETS	ETS alternative	ES
AUDI								
A6 4.2 quattro	(4B, C5)	11/98→01/05		RUN95D		ETS92ND-ETS95D1N		434440ES
A6 S6 quattro	(4B, C5)	09/99→01/05				ETS110D1N		
A6 RS6 quattro	(4B, C5)	07/02→01/05				ETS110D1N		
A6 1.9 TDI	(4B, C5)	04/97→10/00		RUN72D	MAG74D	ETS74ND	ETS70D1N-ETS74DI	476420ES
A6 1.9 TDI	(4B, C5)	07/00→01/05		RUN72D	MAG74D	ETS74ND	ETS70D1N-ETS74DI	476420ES
A6 1.9 TDI	(4B, C5)	08/01→01/05		RUN72D	MAG74D	ETS74ND	ETS70D1N-ETS74DI	476420ES
A6 2.5 TDI	(4B, C5)	07/97→01/05		RUN95D		ETS92ND-ETS95D1N		434440ES
A6 2.5 TDI quattro	(4B, C5)	07/97→01/05		RUN95D		ETS92ND-ETS95D1N		434440ES
A6 2.5 TDI	(4B, C5)	08/01→01/05		RUN95D		ETS92ND-ETS95D1N		434440ES
A6 2.5 TDI	(4B, C5)	07/02→01/05		RUN95D		ETS92ND-ETS95D1N		434440ES
A6 2.5 TDI	(4B, C5)	02/00→01/05		RUN95D		ETS92ND-ETS95D1N		434440ES
A6 2.5 TDI quattro	(4B, C5)	02/00→01/05		RUN95D		ETS92ND-ETS95D1N		434440ES
A6 Avant 1.8	(4B, C5)	02/98→01/05		RUN62D	MAG62D	ETS62ND	ETS60D3N	438320ES
A6 Avant 1.8	(4B, C5)	12/97→01/05		RUN62D	MAG62D	ETS62ND	ETS60D3N	438320ES
A6 Avant 1.8 T	(4B, C5)	12/97→01/05		RUN72D	MAG74D	ETS74ND	ETS70D1N-ETS74DI	476420ES
A6 Avant 1.8 T quattro	(4B, C5)	12/97→01/05		RUN72D	MAG74D	ETS74ND	ETS70D1N-ETS74DI	476420ES
A6 Avant 1.8 T	(4B, C5)	04/99→01/05		RUN72D	MAG74D	ETS74ND	ETS70D1N-ETS74DI	476420ES
A6 Avant 1.8 T quattro	(4B, C5)	12/97→01/05		RUN72D	MAG74D	ETS74ND	ETS70D1N-ETS74DI	476420ES
A6 Avant 2.0	(4B, C5)	08/01→01/05		RUN72D	MAG74D	ETS74ND	ETS70D1N-ETS74DI	476420ES
A6 Avant 2.4	(4B, C5)	07/98→01/05		RUN95D		ETS92ND-ETS95D1N		434440ES
A6 Avant 2.4	(4B, C5)	12/97→01/05		RUN95D		ETS92ND-ETS95D1N		434440ES
A6 Avant 2.4 quattro	(4B, C5)	08/98→05/01		RUN95D		ETS92ND-ETS95D1N		434440ES
A6 Avant 2.4	(4B, C5)	12/97→01/05		RUN95D		ETS92ND-ETS95D1N		434440ES
A6 Avant 2.4 quattro	(4B, C5)	12/97→01/05		RUN95D		ETS92ND-ETS95D1N		434440ES
A6 Avant 2.4	(4B, C5)	12/97→01/05		RUN95D		ETS92ND-ETS95D1N		434440ES
A6 Avant 2.4 quattro	(4B, C5)	12/97→01/05		RUN95D		ETS92ND-ETS95D1N		434440ES
A6 Avant 2.4	(4B, C5)	08/01→01/05		RUN95D		ETS92ND-ETS95D1N		434440ES
A6 Avant 2.4 quattro	(4B, C5)	08/01→01/05		RUN95D		ETS92ND-ETS95D1N		434440ES
A6 Avant 2.7 T	(4B, C5)	02/99→01/05		RUN95D		ETS92ND-ETS95D1N		434440ES
A6 Avant 2.7 T quattro	(4B, C5)	12/97→01/05		RUN95D		ETS92ND-ETS95D1N		434440ES
A6 Avant 2.7 T quattro	(4B, C5)	08/01→01/05		RUN95D		ETS92ND-ETS95D1N		434440ES
A6 Avant 2.8	(4B, C5)	12/97→07/98		RUN72D	MAG74D	ETS74ND	ETS70D1N-ETS74DI	476420ES
A6 Avant 2.8	(4B, C5)	07/99→01/05		RUN72D	MAG74D	ETS74ND	ETS70D1N-ETS74DI	476420ES
A6 Avant 2.8	(4B, C5)	12/97→01/05		RUN72D	MAG74D	ETS74ND	ETS70D1N-ETS74DI	476420ES
A6 Avant 2.8 quattro	(4B, C5)	12/97→01/05		RUN72D	MAG74D	ETS74ND	ETS70D1N-ETS74DI	476420ES
A6 Avant 3.0	(4B, C5)	08/01→01/05		RUN72D	MAG74D	ETS74ND	ETS70D1N-ETS74DI	476420ES
A6 Avant 3.0 quattro	(4B, C5)	08/01→01/05		RUN95D		ETS92ND-ETS95D1N		434440ES
A6 Avant 3.7	(4B, C5)	03/99→01/05		RUN95D		ETS92ND-ETS95D1N		434440ES
A6 Avant 3.7 quattro	(4B, C5)	03/99→01/05		RUN95D		ETS92ND-ETS95D1N		434440ES
A6 Avant 4.2 quattro	(4B, C5)	11/98→01/05		RUN95D		ETS92ND-ETS95D1N		434440ES
A6 Avant S6 quattro	(4B, C5)	09/99→01/05				ETS110D1N		
A6 Avant RS6 quattro	(4B, C5)	07/02→01/05				ETS110D1N		
A6 Avant RS6 plus quattro	(4B, C5)	04/04→01/05				ETS110D1N		
A6 Avant 1.9 TDI	(4B, C5)	02/98→04/01		RUN72D	MAG74D	ETS74ND	ETS70D1N-ETS74DI	476420ES
A6 Avant 1.9 TDI	(4B, C5)	07/00→01/05		RUN72D	MAG74D	ETS74ND	ETS70D1N-ETS74DI	476420ES
A6 Avant 1.9 TDI	(4B, C5)	08/01→01/05		RUN72D	MAG74D	ETS74ND	ETS70D1N-ETS74DI	476420ES
A6 Avant 2.5 TDI	(4B, C5)	12/97→01/05		RUN95D		ETS92ND-ETS95D1N		434440ES

	Design		START	RUN	MAGIS	ETS	ETS alternative	ES
AUDI								
A6 Avant 2.5 TDI quattro	(4B, C5)	12/97→01/05		RUN95D		ETS92ND-ETS95D1N		434440ES
A6 Avant 2.5 TDI	(4B, C5)	08/01→01/05		RUN95D		ETS92ND-ETS95D1N		434440ES
A6 Avant 2.5 TDI	(4B, C5)	07/02→01/05		RUN95D		ETS92ND-ETS95D1N		434440ES
A6 Avant 2.5 TDI	(4B, C5)	02/00→01/05		RUN95D		ETS92ND-ETS95D1N		434440ES
A6 Avant 2.5 TDI quattro	(4B, C5)	02/00→01/05		RUN95D		ETS92ND-ETS95D1N		434440ES
ALLROAD 2.7 T quattro	(4BH)	05/00→08/05		RUN95D		ETS92ND-ETS95D1N		434440ES
ALLROAD 4.2 V8 quattro	(4BH)	07/02→08/05		RUN95D		ETS92ND-ETS95D1N		434440ES
ALLROAD 2.5 TDI quattro	(4BH)	05/03→08/05		RUN95D		ETS92ND-ETS95D1N		434440ES
ALLROAD 2.5 TDI quattro	(4BH)	05/00→08/05		RUN95D		ETS92ND-ETS95D1N		434440ES
A6 2.0 TFSI	(4F2)	06/05→	AGM70D	RUN95D		ETS92ND-ETS95D1N		434440ES
A6 2.4	(4F2)	05/04→10/08		RUN95D		ETS92ND-ETS95D1N		434440ES
A6 2.4 quattro	(4F2)	01/05→10/08		RUN95D		ETS92ND-ETS95D1N		434440ES
A6 2.8 FSI	(4F2)	10/08→		RUN95D				
A6 2.8 FSI quattro	(4F2)	10/08→		RUN95D				
A6 2.8 FSI	(4F2)	11/06→10/08	AGM80D	RUN95D		ETS92ND-ETS95D1N		434440ES
A6 2.8 FSI quattro	(4F2)	06/07→10/08		RUN95D		ETS92ND-ETS95D1N		434440ES
A6 2.8 FSI	(4F2)	10/08→		RUN95D				
A6 2.8 FSI quattro	(4F2)	10/08→		RUN95D				
A6 3.0	(4F2)	08/04→05/06		RUN95D		ETS92ND-ETS95D1N		434440ES
A6 3.0 quattro	(4F2)	05/04→05/06	AGM80D	RUN72D	MAG74D	ETS74ND	ETS70D1N-ETS74DI	476420ES
A6 3.0 TFSI quattro	(4F2)	10/08→		RUN95D				
A6 3.2 FSI quattro	(4F2)	09/06→10/08		RUN95D		ETS92ND-ETS95D1N		434440ES
A6 3.2 FSI	(4F2)	05/04→10/08		RUN95D		ETS92ND-ETS95D1N		434440ES
A6 3.2 FSI quattro	(4F2)	05/04→10/08	AGM80D	RUN95D		ETS92ND-ETS95D1N		434440ES
A6 4.2 quattro	(4F2)	05/04→05/06	AGM80D	RUN95D		ETS92ND-ETS95D1N		434440ES
A6 4.2 FSI quattro	(4F2)	06/06→		RUN95D		ETS92ND-ETS95D1N		434440ES
A6 RS6 quattro	(4F2)	09/08→	AGM90D			ETS110D1N		
A6 S6 quattro	(4F2)	03/06→	AGM80D			ETS110D1N		
A6 2.0 TDI	(4F2)	09/05→06/06		RUN95D		ETS92ND-ETS95D1N		434440ES
A6 2.0 TDI	(4F2)	07/04→		RUN95D		ETS92ND-ETS95D1N		434440ES
A6 2.0 TDI	(4F2)	07/04→10/08	AGM70D	RUN95D		ETS92ND-ETS95D1N		434440ES
A6 2.0 TDI	(4F2)	04/09→		RUN95D				
A6 2.0 TDI	(4F2)	11/08→		RUN95D		ETS92ND-ETS95D1N		434440ES
A6 2.7 TDI	(4F2)	11/04→		RUN95D		ETS92ND-ETS95D1N		434440ES
A6 2.7 TDI quattro	(4F2)	06/05→		RUN95D		ETS92ND-ETS95D1N		434440ES
A6 2.7 TDI	(4F2)	11/04→10/08		RUN95D		ETS92ND-ETS95D1N		434440ES
A6 2.7 TDI quattro	(4F2)	11/04→10/08	AGM80D	RUN95D		ETS92ND-ETS95D1N		434440ES
A6 2.7 TDI	(4F2)	10/08→		RUN95D				
A6 2.7 TDI quattro	(4F2)	10/08→		RUN95D				
A6 3.0 TDI quattro	(4F2)	05/04→		RUN95D		ETS92ND-ETS95D1N		434440ES
A6 3.0 TDI quattro	(4F2)	05/04→05/06	AGM80D	RUN95D		ETS92ND-ETS95D1N		434440ES
A6 3.0 TDI	(4F2)	06/06→		RUN95D		ETS92ND-ETS95D1N		434440ES
A6 3.0 TDI quattro	(4F2)	06/06→10/08		RUN95D		ETS92ND-ETS95D1N		434440ES
A6 3.0 TDI quattro	(4F2)	10/08→		RUN95D				
A6 3.0 TDI quattro		09/09→	AGM90D					
A6 Avant 2.0 TFSI	(4F5)	06/05→	AGM70D	RUN95D		ETS92ND-ETS95D1N		434440ES
A6 Avant 2.4	(4F5)	03/05→10/08		RUN95D		ETS92ND-ETS95D1N		434440ES

	Design		START	RUN	MAGIS	ETS	ETS alternative	ES
AUDI								
A6 Avant 2.4 quattro	(4F5)	03/05→10/08	AGM70D	RUN95D		ETS92ND-ETS95D1N		434440ES
A6 Avant 2.8 FSI	(4F5)	10/08→		RUN95D				
A6 Avant 2.8 FSI quattro	(4F5)	10/08→		RUN95D				
A6 Avant 2.8 FSI	(4F5)	11/06→10/08	AGM80D	RUN95D		ETS92ND-ETS95D1N		434440ES
A6 Avant 2.8 FSI quattro	(4F5)	06/07→10/08		RUN95D		ETS92ND-ETS95D1N		434440ES
A6 Avant 2.8 FSI	(4F5)	10/08→		RUN95D				
A6 Avant 2.8 FSI quattro	(4F5)	10/08→		RUN95D				
A6 Avant 3.0	(4F5)	03/05→05/06		RUN72D	MAG74D	ETS74ND	ETS70D1N-ETS74DI	476420ES
A6 Avant 3.0 quattro	(4F5)	03/05→05/06		RUN95D		ETS92ND-ETS95D1N		434440ES
A6 Avant 3.0 TFSI quattro		03/05→	AGM80D					
A6 Avant 3.0 TFSI quattro	(4F5)	10/08→		RUN95D				
A6 Avant 3.2 FSI	(4F5)	03/05→10/08		RUN95D		ETS92ND-ETS95D1N		434440ES
A6 Avant 3.2 FSI quattro	(4F5)	03/05→10/08		RUN95D		ETS92ND-ETS95D1N		434440ES
A6 Avant 4.2 quattro	(4F5)	03/05→		RUN95D		ETS92ND-ETS95D1N		434440ES
A6 Avant 4.2 FSI quattro	(4F5)	06/06→		RUN95D		ETS92ND-ETS95D1N		434440ES
A6 Avant RS6 quattro	(4F5)	04/08→	AGM90D			ETS110D1N		
A6 Avant S6 quattro	(4F5)	03/06→				ETS110D1N		
A6 Avant 2.0 TDI	(4F5)	09/05→06/06		RUN95D		ETS92ND-ETS95D1N		434440ES
A6 Avant 2.0 TDI	(4F5)	06/05→		RUN95D		ETS92ND-ETS95D1N		434440ES
A6 Avant 2.0 TDI	(4F5)	06/05→10/08	AGM70D	RUN95D		ETS92ND-ETS95D1N		434440ES
A6 Avant 2.0 TDI	(4F5)	04/09→		RUN95D				
A6 Avant 2.0 TDI	(4F5)	10/08→		RUN95D				
A6 Avant 2.7 TDI	(4F5)	03/05→		RUN95D		ETS92ND-ETS95D1N		434440ES
A6 Avant 2.7 TDI quattro	(4F5)	06/05→		RUN95D		ETS92ND-ETS95D1N		434440ES
A6 Avant 2.7 TDI	(4F5)	03/05→10/08		RUN95D		ETS92ND-ETS95D1N		434440ES
A6 Avant 2.7 TDI quattro	(4F5)	03/05→10/08	AGM70D	RUN95D		ETS92ND-ETS95D1N		434440ES
A6 Avant 2.7 TDI	(4F5)	10/08→		RUN95D				
A6 Avant 2.7 TDI quattro	(4F5)	10/08→		RUN95D				
A6 Avant 3.0 TDI quattro	(4F5)	03/05→		RUN95D		ETS92ND-ETS95D1N		434440ES
A6 Avant 3.0 TDI quattro	(4F5)	03/05→05/06	AGM80D	RUN95D		ETS92ND-ETS95D1N		434440ES
A6 Avant 3.0 TDi	(4F5)	06/06→		RUN95D		ETS92ND-ETS95D1N		434440ES
A6 Avant 3.0 TDI quattro	(4F5)	06/06→10/08		RUN95D		ETS92ND-ETS95D1N		434440ES
A6 Avant 3.0 TDI quattro	(4F5)	10/08→		RUN95D				
A6 Allroad 3.0 TFSI quattro	(4FH)	10/08→	AGM90D	RUN95D				
A6 Allroad 3.2 FSI quattro	(4FH)	05/06→	AGM90D	RUN95D		ETS92ND-ETS95D1N		434440ES
A6 Allroad 4.2 FSI quattro	(4FH)	05/06→	AGM90D	RUN95D		ETS92ND-ETS95D1N		434440ES
A6 Allroad 2.7 TDI quattro	(4FH)	05/06→	AGM90D	RUN95D		ETS92ND-ETS95D1N		434440ES
A6 Allroad 2.7 TDI quattro	(4FH)	05/06→	AGM90D	RUN95D		ETS92ND-ETS95D1N		434440ES
A6 Allroad 2.7 TDI quattro	(4FH)	10/08→		RUN95D		ETS92ND-ETS95D1N		434440ES
A6 Allroad 3.0 TDI quattro	(4FH)	05/06→		RUN95D		ETS92ND-ETS95D1N		434440ES
A6 Allroad 3.0 TDI quattro	(4FH)	05/06→	AGM90D	RUN95D		ETS92ND-ETS95D1N		434440ES
A6 Allroad 3.0 TDI quattro	(4FH)	10/08→		RUN95D				
V8 3.6 quattro	(44_, 4C_)	04/93→02/94		RUN95D		ETS92ND-ETS95D1N		434440ES
V8 4.2 quattro	(44_, 4C_)	10/91→02/94		RUN95D		ETS92ND-ETS95D1N		434440ES
A8 2.8	(4D2, 4D8)	07/95→03/96		RUN95D		ETS92ND-ETS95D1N		434440ES
A8 2.8 quattro	(4D2, 4D8)	07/95→03/96		RUN95D		ETS92ND-ETS95D1N		434440ES
A8 2.8	(4D2, 4D8)	03/94→03/96		RUN95D		ETS92ND-ETS95D1N		434440ES

	Design		START	RUN	MAGIS	ETS	ETS alternative	ES
AUDI								
A8 2.8 quattro	(4D2, 4D8)	03/94→03/96		RUN95D		ETS92ND-ETS95D1N		434440ES
A8 2.8	(4D2, 4D8)	04/96→09/02		RUN95D		ETS92ND-ETS95D1N		434440ES
A8 2.8 quattro	(4D2, 4D8)	04/96→09/02		RUN95D		ETS92ND-ETS95D1N		434440ES
A8 3.7	(4D2, 4D8)	07/95→12/98				ETS110D1N		
A8 3.7 quattro	(4D2, 4D8)	07/95→11/98				ETS110D1N		
A8 3.7	(4D2, 4D8)	11/98→09/02				ETS110D1N		
A8 3.7 quattro	(4D2, 4D8)	11/98→09/02				ETS110D1N		
A8 4.2 quattro	(4D2, 4D8)	02/99→04/00		RUN95D		ETS92ND-ETS95D1N		434440ES
A8 4.2 quattro	(4D2, 4D8)	03/94→07/96		RUN95D		ETS92ND-ETS95D1N		434440ES
A8 4.2 quattro	(4D2, 4D8)	03/94→11/98		RUN95D		ETS92ND-ETS95D1N		434440ES
A8 4.2 quattro	(4D2, 4D8)	11/98→09/02		RUN95D		ETS92ND-ETS95D1N		434440ES
A8 S 8 quattro	(4D2, 4D8)	07/96→06/99				ETS110D1N		
A8 S 8 quattro	(4D2, 4D8)	06/99→09/02				ETS110D1N		
A8 6.0 W12 quattro	(4D2, 4D8)	01/01→09/02				ETS110D1N		
A8 2.5 TDI	(4D2, 4D8)	01/97→04/00		RUN95D		ETS92ND-ETS95D1N		434440ES
A8 2.5 TDI quattro	(4D2, 4D8)	07/97→04/00		RUN95D		ETS92ND-ETS95D1N		434440ES
A8 2.5 TDI	(4D2, 4D8)	09/00→09/02		RUN95D		ETS92ND-ETS95D1N		434440ES
A8 2.5 TDI quattro	(4D2, 4D8)	09/00→09/02		RUN95D		ETS92ND-ETS95D1N		434440ES
A8 3.3 TDI quattro	(4D2, 4D8)	06/00→09/02	AGM90D			ETS110D1N		
A8 2.8 FSI	(4E_)	08/07→07/10	AGM90D	RUN95D		ETS92ND-ETS95D1N		434440ES
A8 3.0	(4E_)	07/03→07/10	AGM90D	RUN95D		ETS92ND-ETS95D1N		434440ES
A8 3.0 Long quattro	(4E_)	11/03→05/06		RUN95D		ETS92ND-ETS95D1N		434440ES
A8 3.0	(4E_)	08/03→07/10	AGM90D	RUN95D		ETS92ND-ETS95D1N		434440ES
A8 3.0 Long quattro	(4E_)	08/03→05/05		RUN95D		ETS92ND-ETS95D1N		434440ES
A8 3.2 FSI	(4E_)	06/05→07/10	AGM90D			ETS110D1N		
A8 3.2 FSI quattro	(4E_)	06/05→07/10				ETS110D1N		
A8 3.7 quattro	(4E_)	10/02→07/10	AGM90D			ETS110D1N		
A8 4.2 quattro	(4E_)	10/02→07/10		RUN95D		ETS92ND-ETS95D1N		434440ES
A8 4.2 FSI quattro	(4E_)	06/06→07/10				ETS110D1N		
A8 4.2 FSI quattro		10/02→	AGM90D					
A8 S8 quattro	(4E_)	06/06→07/10	AGM90D			ETS110D1N		
A8 6.0 W12 quattro	(4E_)	12/03→07/10	AGM90D			ETS110D1N		
A8 3.0 TDI quattro	(4E_)	11/03→07/10		RUN95D		ETS92ND-ETS95D1N		434440ES
A8 3.0 TDI quattro	(4E_)	08/03→07/10	AGM90D	RUN95D		ETS92ND-ETS95D1N		434440ES
A8 4.0 TDI quattro	(4E_)	03/03→07/10	AGM90D			ETS110D1N		
A8 4.2 TDI quattro	(4E_)	07/05→07/10	AGM90D			ETS110D1N		
A8 4.2 TDI quattro	(4E_)	07/05→07/10	AGM90D			ETS110D1N		
A8 3.0 TFSI quattro	(4H_)	07/10→		RUN95D				
A8 4.2 FSI quattro	(4H_)	11/09→				ETS110D1N		
A8 3.0 TDI quattro	(4H_)	07/10→		RUN95D				
A8 4.2 TDI quattro		07/05→	AGM90D					
Q5 2.0 TFSI	(8R)	08/09→				ETS110D1N		
Q5 2.0 TFSI	(8R)	11/08→	AGM80D			ETS110D1N		
Q5 3.2 FSI	(8R)	11/08→	AGM80D			ETS110D1N		
Q5 2.0 TDI	(8R)	08/09→				ETS110D1N		
Q5 2.0 TDI	(8R)	08/09→				ETS110D1N		
Q5 2.0 TDI	(8R)	11/08→	AGM80D			ETS110D1N		

	Design		START	RUN	MAGIS	ETS	ETS alternative	ES
AUDI								
Q5 2.0 TDI	(8R)	11/08→				ETS110D1N		
Q5 3.0 TDI	(8R)	11/08→	AGM90D			ETS110D1N		
Q5 3.0 TDI	(8R)	11/08→				ETS110D1N		
Q7 3.6 FSI	(4L)	08/06→	AGM90D			ETS110D1N		
Q7 4.2 FSI	(4L)	03/06→	AGM90D			ETS110D1N		
Q7 3.0 TDi	(4L)	03/06→	AGM90D			ETS110D1N		
Q7 3.0 TDI	(4L)	03/06→				ETS110D1N		
Q7 3.0 TDI	(4L)	11/07→				ETS110D1N		
Q7 4.2 TDI	(4L)	03/07→	AGM90D			ETS110D1N		
Q7 4.2 TDI	(4L)	05/09→				ETS110D1N		
Q7 6.0 TDI	(4L)	09/08→	AGM90D			ETS110D1N		
R8 4.2 FSI quattro		04/07→				ETS110D1N		
R8 4.2 FSI quattro		07/10→				ETS110D1N		
R8 5.2 FSI quattro		04/09→				ETS110D1N		
R8 Spyder 4.2 FSI quattro		02/10→				ETS110D1N		
R8 Spyder 4.2 FSI quattro		09/10→				ETS110D1N		
R8 Spyder 5.2 FSI quattro		02/10→				ETS110D1N		
TT 1.8 T	(8N3)	09/02→06/06		RUN62D	MAG62D	ETS62ND	ETS60D3N	438320ES
TT 1.8 T	(8N3)	09/05→06/06		RUN62D	MAG62D	ETS62ND	ETS60D3N	438320ES
TT 1.8 T	(8N3)	10/98→06/06		RUN62D	MAG62D	ETS62ND	ETS60D3N	438320ES
TT 1.8 T quattro	(8N3)	10/98→06/06		RUN62D	MAG62D	ETS62ND	ETS60D3N	438320ES
TT 1.8 T	(8N3)	09/05→06/06		RUN62D	MAG62D	ETS62ND	ETS60D3N	438320ES
TT 1.8 T quattro	(8N3)	09/05→06/06		RUN62D	MAG62D	ETS62ND	ETS60D3N	438320ES
TT 1.8 T quattro	(8N3)	10/98→06/06		RUN62D	MAG62D	ETS62ND	ETS60D3N	438320ES
TT 1.8 T quattro	(8N3)	03/05→06/06		RUN62D	MAG62D	ETS62ND	ETS60D3N	438320ES
TT Roadster 1.8 T	(8N9)	01/01→06/06		RUN62D	MAG62D	ETS62ND	ETS60D3N	438320ES
TT Roadster 1.8 T	(8N9)	09/05→06/06		RUN62D	MAG62D	ETS62ND	ETS60D3N	438320ES
TT Roadster 1.8 T	(8N9)	10/99→06/06		RUN62D	MAG62D	ETS62ND	ETS60D3N	438320ES
TT Roadster 1.8 T quattro	(8N9)	02/00→06/06		RUN62D	MAG62D	ETS62ND	ETS60D3N	438320ES
TT Roadster 1.8 T	(8N9)	09/05→06/06		RUN62D	MAG62D	ETS62ND	ETS60D3N	438320ES
TT Roadster 1.8 T quattro	(8N9)	09/05→06/06		RUN62D	MAG62D	ETS62ND	ETS60D3N	438320ES
TT Roadster 1.8 T quattro	(8N9)	10/99→06/06		RUN62D	MAG62D	ETS62ND	ETS60D3N	438320ES
TT Roadster 3.2 VR6 quattro	(8N9)	07/03→06/06		RUN72D	MAG74D	ETS74ND	ETS70D1N-ETS74DI	476420ES
TT 3.2 V6 quattro	(8J3)	10/06→		RUN72D				
80 1.6	(89, 89Q, 8A, B3)	08/90→10/91			MAG44DB	ETS44NDB		ES45NDB
80 2.0	(89, 89Q, 8A, B3)	10/90→08/91			MAG62DB	ETS60NDB	ETS60D4N	ES60NDB
80 2.0 quattro	(89, 89Q, 8A, B3)	10/90→08/91			MAG62DB	ETS60NDB	ETS60D4N	ES60NDB
80 2.0 quattro	(89, 89Q, 8A, B3)	10/90→08/91			MAG62DB	ETS60NDB	ETS60D4N	ES60NDB
80 2.0 E 16V	(89, 89Q, 8A, B3)	03/90→09/91			MAG62DB	ETS60NDB	ETS60D4N	ES60NDB
80 2.0 E 16V quattro	(89, 89Q, 8A, B3)	03/90→08/91			MAG62DB	ETS60NDB	ETS60D4N	ES60NDB
COUPE 2.0	(89, 8B)	03/90→07/90			MAG72DB	ETS71NDB		
COUPE 2.0 16 V	(89, 8B)	01/92→07/92			MAG72DB	ETS71NDB		
COUPE 2.0 16 V	(89, 8B)	08/92→12/96			MAG72DB	ETS71NDB		
COUPE S2 quattro	(89, 8B)	09/90→09/92			MAG72DB	ETS71NDB		
COUPE S2 quattro	(89, 8B)	10/92→12/96			MAG72DB	ETS71NDB		
COUPE 2.3	(89, 8B)	03/90→12/96			MAG72DB	ETS71NDB		
COUPE 2.3 quattro	(89, 8B)	05/90→12/96			MAG72DB	ETS71NDB		

	Design		START	RUN	MAGIS	ETS	ETS alternative	ES
AUDI								
COUPE 2.3 20V	(89, 8B)	08/90→07/91			MAG72DB	ETS71NDB		
COUPE 2.3 20V quattro	(89, 8B)	05/90→12/96			MAG72DB	ETS71NDB		
COUPE 2.6	(89, 8B)	08/92→12/96			MAG72DB	ETS71NDB		
COUPE 2.6 quattro	(89, 8B)	08/92→12/96			MAG72DB	ETS71NDB		
COUPE 2.8	(89, 8B)	09/91→12/96			MAG72DB	ETS71NDB		
COUPE 2.8 quattro	(89, 8B)	08/91→12/96			MAG72DB	ETS71NDB		
CABRIOLET 1.8	(8G7, B4)	01/97→08/00			MAG72DB	ETS71NDB		
CABRIOLET 2.0 E	(8G7, B4)	01/93→07/98			MAG72DB	ETS71NDB		
CABRIOLET 2.0 16V	(8G7, B4)	06/95→07/96			MAG72DB	ETS71NDB		
CABRIOLET 2.3 E	(8G7, B4)	05/91→07/94			MAG72DB	ETS71NDB		
CABRIOLET 2.6	(8G7, B4)	06/93→08/00			MAG72DB	ETS71NDB		
CABRIOLET 2.8	(8G7, B4)	11/92→08/00			MAG72DB	ETS71NDB		
CABRIOLET 1.9 TDI	(8G7, B4)	06/95→08/00			MAG72DB	ETS71NDB		
80 1.6	(8C, B4)	09/91→12/94			MAG44DB	ETS44NDB		ES45NDB
80 1.6 E	(8C, B4)	06/93→12/94			MAG62DB	ETS60NDB	ETS60D4N	ES60NDB
80 2.0	(8C, B4)	09/91→12/94			MAG62DB	ETS60NDB	ETS60D4N	ES60NDB
80 2.0 E	(8C, B4)	09/91→12/94			MAG62DB	ETS60NDB	ETS60D4N	ES60NDB
80 2.0 E quattro	(8C, B4)	09/91→12/94			MAG62DB	ETS60NDB	ETS60D4N	ES60NDB
80 2.0 E 16V	(8C, B4)	08/92→12/94			MAG62DB	ETS60NDB	ETS60D4N	ES60NDB
80 2.0 E 16V quattro	(8C, B4)	04/92→12/94			MAG62DB	ETS60NDB	ETS60D4N	ES60NDB
80 S2 quattro	(8C, B4)	02/93→12/94			MAG62DB	ETS60NDB	ETS60D4N	ES60NDB
80 2.3 E	(8C, B4)	09/91→12/94			MAG62DB	ETS60NDB	ETS60D4N	ES60NDB
80 2.3 E quattro	(8C, B4)	09/91→12/94			MAG62DB	ETS60NDB	ETS60D4N	ES60NDB
80 2.6	(8C, B4)	07/92→12/94			MAG62DB	ETS60NDB	ETS60D4N	ES60NDB
80 2.6 quattro	(8C, B4)	06/92→12/94			MAG62DB	ETS60NDB	ETS60D4N	ES60NDB
80 2.8	(8C, B4)	09/91→12/94			MAG62DB	ETS60NDB	ETS60D4N	ES60NDB
80 2.8 quattro	(8C, B4)	09/91→12/94			MAG62DB	ETS60NDB	ETS60D4N	ES60NDB
80 1.9 TD	(8C, B4)	09/91→12/94			MAG72DB	ETS71NDB-ETS65NDB		ES70NDB
80 1.9 TDI	(8C, B4)	09/91→12/94			MAG72DB	ETS71NDB-ETS65NDB		ES70NDB
80 Avant 1.6 E	(8C, B4)	06/93→01/96			MAG62DB	ETS60NDB	ETS60D4N	ES60NDB
80 Avant 2.0	(8C, B4)	07/92→01/96			MAG62DB	ETS60NDB	ETS60D4N	ES60NDB
80 Avant 2.0 quattro	(8C, B4)	11/93→07/96			MAG62DB	ETS60NDB	ETS60D4N	ES60NDB
80 Avant 2.0 E	(8C, B4)	07/92→01/96			MAG62DB	ETS60NDB	ETS60D4N	ES60NDB
80 Avant 2.0 E 16V	(8C, B4)	02/93→01/96			MAG62DB	ETS60NDB	ETS60D4N	ES60NDB
80 Avant 2.0 E 16V quattro	(8C, B4)	12/92→07/95			MAG62DB	ETS60NDB	ETS60D4N	ES60NDB
80 Avant S2 quattro	(8C, B4)	02/93→07/95			MAG62DB	ETS60NDB	ETS60D4N	ES60NDB
80 Avant RS2 quattro (P1)	(8C, B4)	03/94→05/95			MAG62DB	ETS60NDB	ETS60D4N	ES60NDB
80 Avant 2.3 E	(8C, B4)	07/92→01/96			MAG62DB	ETS60NDB	ETS60D4N	ES60NDB
80 Avant 2.3 E quattro	(8C, B4)	09/91→11/94			MAG62DB	ETS60NDB	ETS60D4N	ES60NDB
80 Avant 2.6 quattro	(8C, B4)	08/94→07/96			MAG62DB	ETS60NDB	ETS60D4N	ES60NDB
80 Avant 2.6	(8C, B4)	07/92→01/96			MAG62DB	ETS60NDB	ETS60D4N	ES60NDB
80 Avant 2.6 quattro	(8C, B4)	07/92→07/95			MAG62DB	ETS60NDB	ETS60D4N	ES60NDB
80 Avant 2.8	(8C, B4)	09/91→01/96			MAG62DB	ETS60NDB	ETS60D4N	ES60NDB
80 Avant 2.8 quattro	(8C, B4)	08/92→07/95			MAG62DB	ETS60NDB	ETS60D4N	ES60NDB
80 Avant 1.9 TD	(8C, B4)	09/91→12/94			MAG72DB	ETS71NDB		
80 Avant 1.9 TDI	(8C, B4)	07/92→01/96			MAG72DB	ETS71NDB		
90 2.3 E 20V	(89, 89Q, 8A, B3)	04/90→07/91			MAG62DB	ETS60NDB-ETS50NDB		ES60NDB

	Design		START	RUN	MAGIS	ETS	ETS alternative	ES
AUDI								
90 2.3 E 20V quattro	(89, 89Q, 8A, B3)	04/90→09/91			MAG62DB	ETS60NDB-ETS50NDB		ES60NDB
100 2.3 E	(44, 44Q, C3)	01/90→11/90			MAG62DB	ETS60NDB-ETS50NDB		ES60NDB
100 2.3 quattro	(44, 44Q, C3)	01/90→11/90			MAG62DB	ETS60NDB-ETS50NDB		ES60NDB
100 2.5 TDI	(44, 44Q, C3)	01/90→11/90			MAG72DB	ETS71NDB		
100 Avant 2.3	(44, 44Q, C3)	03/90→11/90			MAG62DB	ETS60NDB-ETS50NDB		ES60NDB
100 Avant 2.3 quattro	(44, 44Q, C3)	01/90→11/90			MAG72DB	ETS71NDB-ETS65NDB		ES70NDB
100 Avant 2.5 TDI	(44, 44Q, C3)	01/90→11/90			MAG72DB	ETS71NDB		
100 2.0	(4A, C4)	12/90→06/94			MAG72DB	ETS71NDB-ETS65NDB		ES70NDB
100 2.0 E	(4A, C4)	12/90→06/94			MAG62DB	ETS60NDB-ETS50NDB		ES60NDB
100 2.0 E quattro	(4A, C4)	12/90→07/92			MAG62DB	ETS60NDB-ETS50NDB		ES60NDB
100 2.0 E 16V	(4A, C4)	01/92→06/94			MAG62DB	ETS60NDB-ETS50NDB		ES60NDB
100 2.0 E 16V quattro	(4A, C4)	07/92→06/94			MAG62DB	ETS60NDB-ETS50NDB		ES60NDB
100 S4 Turbo quattro	(4A, C4)	08/91→06/94			MAG72DB	ETS71NDB		
100 2.3 E	(4A, C4)	12/90→06/94			MAG62DB	ETS60NDB-ETS50NDB		ES60NDB
100 2.3 E quattro	(4A, C4)	12/90→06/94			MAG62DB	ETS60NDB-ETS50NDB		ES60NDB
100 2.6	(4A, C4)	07/93→06/94			MAG62DB	ETS60NDB-ETS50NDB		ES60NDB
100 2.6	(4A, C4)	03/92→06/94			MAG62DB	ETS60NDB-ETS50NDB		ES60NDB
100 2.6 quattro	(4A, C4)	04/92→06/94			MAG72DB	ETS71NDB		
100 2.8 E	(4A, C4)	12/90→06/94			MAG62DB	ETS60NDB-ETS50NDB		ES60NDB
100 2.8 E quattro	(4A, C4)	12/90→06/94			MAG62DB	ETS60NDB-ETS50NDB		ES60NDB
100 S4 V8 quattro	(4A, C4)	10/92→06/94			MAG62DB	ETS60NDB-ETS50NDB		ES60NDB
100 S4 V8 quattro	(4A, C4)	03/94→06/94			MAG62DB	ETS60NDB-ETS50NDB		ES60NDB
100 2.4 D	(4A, C4)	12/90→06/94			MAG72DB	ETS71NDB		
100 2.5 TDI	(4A, C4)	12/90→06/94			MAG72DB	ETS71NDB		
100 Avant 2.0 E	(4A, C4)	09/91→06/94			MAG62DB	ETS60NDB-ETS50NDB		ES60NDB
100 Avant 2.0 E	(4A, C4)	09/91→06/94			MAG62DB	ETS60NDB-ETS50NDB		ES60NDB
100 Avant 2.0 E quattro	(4A, C4)	12/90→07/92			MAG62DB	ETS60NDB-ETS50NDB		ES60NDB
100 Avant 2.0 E 16V	(4A, C4)	07/92→06/94			MAG62DB	ETS60NDB-ETS50NDB		ES60NDB
100 Avant 2.0 E 16V quattro	(4A, C4)	07/92→06/94			MAG62DB	ETS60NDB-ETS50NDB		ES60NDB
100 Avant S4 Turbo quattro	(4A, C4)	09/91→06/94			MAG72DB	ETS71NDB		
100 Avant 2.3 E	(4A, C4)	09/91→06/94			MAG62DB	ETS60NDB-ETS50NDB		ES60NDB
100 Avant 2.3 E quattro	(4A, C4)	09/91→06/94			MAG62DB	ETS60NDB-ETS50NDB		ES60NDB
100 Avant 2.6	(4A, C4)	07/93→06/94			MAG62DB	ETS60NDB-ETS50NDB		ES60NDB
100 Avant 2.6	(4A, C4)	03/92→06/94			MAG62DB	ETS60NDB-ETS50NDB		ES60NDB
100 Avant 2.6 quattro	(4A, C4)	07/92→06/94			MAG62DB	ETS60NDB-ETS50NDB		ES60NDB
100 Avant 2.8 E	(4A, C4)	09/91→06/94			MAG62DB	ETS60NDB-ETS50NDB		ES60NDB
100 Avant 2.8 E quattro	(4A, C4)	09/91→06/94			MAG72DB	ETS71NDB		
100 Avant S4 V8 quattro	(4A, C4)	10/92→06/94			MAG62DB	ETS60NDB-ETS50NDB		ES60NDB
100 Avant S4 V8 quattro	(4A, C4)	03/94→06/94			MAG62DB	ETS60NDB-ETS50NDB		ES60NDB
100 Avant 2.4 D	(4A, C4)	12/90→06/94			MAG72DB	ETS71NDB		
100 Avant 2.5 TDI	(4A, C4)	12/90→06/94			MAG72DB	ETS71NDB		

	Design		START	RUN	MAGIS	ETS	ETS alternative	ES
AUTOBAR								
AUTOB Y10 1.1 i.e. CAT		09/90→		RUN50D	MAG50D-MAG45D	ETS50ND-ETS45ND	ETS50D3N-ETS50D4N	436210ES
BENTLEY								
CONTINENTAL FLYING SPUR 6.0		03/05→		RUN72D	MAG74D	ETS74ND	ETS70D1N-ETS74DI	476420ES
CONTINENTAL FLYING SPUR 6.0		09/08→		RUN72D	MAG74D	ETS74ND	ETS70D1N-ETS74DI	476420ES
CONTINENTAL GT 6.0		06/03→		RUN72D	MAG74D	ETS74ND	ETS70D1N-ETS74DI	476420ES
CONTINENTAL GT 6.0		09/07→		RUN72D	MAG74D	ETS74ND	ETS70D1N-ETS74DI	476420ES
CONTINENTAL GTC 6.0		12/06→		RUN72D	MAG74D	ETS74ND	ETS70D1N-ETS74DI	476420ES
BERT								
FREECLIMBER 2.0		12/90→12/93		RUN72D	MAG74D	ETS74ND	ETS70D1N-ETS74DI	476420ES
FREECLIMBER 2.0 CAT		12/90→12/93		RUN72D	MAG74D	ETS74ND	ETS70D1N-ETS74DI	476420ES
FREECLIMBER 2.7		12/90→12/93		RUN72D	MAG74D	ETS74ND	ETS70D1N-ETS74DI	476420ES
FREECLIMBER 2 1.6		03/92→		RUN72D	MAG74D	ETS74ND	ETS70D1N-ETS74DI	476420ES
BMW								
1 116i	(E81, E87)	09/04→		RUN62D				
1 116i	(E81, E87)	09/07→		RUN62D				
1 116i	Stop/Start , RB , B	01/09→	AGM80D					
1 118i	(E81, E87)	09/04→		RUN62D				
1 118i	Stop/Start , RB , B	04/07→	AGM80D					
1 120i	(E81, E87)	09/04→		RUN62D				
1 120i	(E81, E87)	03/07→		RUN62D				
1 120i	(E81, E87)	03/07→		RUN62D				
1 120i	Stop/Start , RB , B	04/07→	AGM80D					
1 130i	(E81, E87)	03/05→		RUN62D				
1 130i	(E81, E87)	09/05→		RUN62D				
1 130i		01/07→	AGM70D					
1 118d	(E81, E87)	09/04→	AGM80D		MAG82D	ETS80ND		
1 118d	Stop/Start , RB , B	04/07→	AGM80D					
1 120d	(E81, E87)	09/04→	AGM80D		MAG82D	ETS80ND		
1 120d	Stop/Start , RB , B	04/07→	AGM80D					
1 123d	Stop/Start , RB , B		AGM80D					
1 Cabriolet 118i	Stop/Start , RB , B	03/08→	AGM90D					
1 Cabriolet 120i	Stop/Start , RB , B	03/08→	AGM90D					
1 Cabriolet 118d	Stop/Start , RB , B	09/08→	AGM90D					
1 Cabriolet 120d	Stop/Start , RB , B	03/08→	AGM90D					
1 Cabriolet 123d	Stop/Start , RB , B	09/08→	AGM80D					
3 M3 EVO II 2.5	(E30)	01/90→01/92		RUN72D	MAG74D	ETS74ND	ETS70D1N-ETS74DI	476420ES
3 Touring 316 i	(E30)	09/91→06/94			MAG62DB	ETS60NDB-ETS50NDB		ES60NDB
3 Touring 316 i	(E30)	09/91→06/94			MAG62DB	ETS60NDB-ETS50NDB		ES60NDB
3 Convertible 318 i	(E30)	09/90→10/93			MAG62DB	ETS60NDB-ETS50NDB		ES60NDB
3 316 i	(E36)	09/90→09/93			MAG62DB	ETS60NDB-ETS50NDB		ES60NDB
3 316 i	(E36)	09/90→09/93			MAG62DB	ETS60NDB-ETS50NDB		ES60NDB
3 316 i	(E36)	07/93→02/98			MAG62DB	ETS60NDB-ETS50NDB		ES60NDB
3 318 i	(E36)	12/90→10/93			MAG62DB	ETS60NDB-ETS50NDB		ES60NDB
3 318 i	(E36)	10/93→02/98			MAG62DB	ETS60NDB-ETS50NDB		ES60NDB

	Design		START	RUN	MAGIS	ETS	ETS alternative	ES
BMW								
3 318 is	(E36)	03/93→09/97			MAG62DB	ETS60NDB-ETS50NDB		ES60NDB
3 318 is	(E36)	09/95→02/98			MAG62DB	ETS60NDB-ETS50NDB		ES60NDB
3 320 i	(E36)	09/90→02/98			MAG72DB	ETS71NDB		
3 323 i 2.5	(E36)	03/95→02/98		RUN72D	MAG74D	ETS74ND	ETS70D1N-ETS74DI	476420ES
3 325 i	(E36)	09/90→09/95			MAG72DB	ETS71NDB		
3 328 i	(E36)	01/95→02/98		RUN72D	MAG74D	ETS74ND	ETS70D1N-ETS74DI	476420ES
3 M3 3.0	(E36)	08/94→09/95		RUN72D	MAG74D	ETS74ND	ETS70D1N-ETS74DI	476420ES
3 M3 3.2	(E36)	09/95→02/98		RUN72D	MAG74D	ETS74ND	ETS70D1N-ETS74DI	476420ES
3 318 tds	(E36)	01/95→02/98			MAG72DB	ETS71NDB		
3 325 td	(E36)	09/91→02/98		RUN95D		ETS92ND-ETS95D1N		434440ES
3 325 tds	(E36)	05/93→02/98		RUN95D		ETS92ND-ETS95D1N		434440ES
3 Compact 316 i	(E36)	03/94→08/00			MAG62DB	ETS60NDB-ETS50NDB		ES60NDB
3 Compact 316 g	(E36)	12/95→08/00			MAG62DB	ETS60NDB-ETS50NDB		ES60NDB
3 Compact 318 ti	(E36)	11/94→08/95			MAG62DB	ETS60NDB-ETS50NDB		ES60NDB
3 Compact 316 i	(E36)	12/98→08/00			MAG62DB	ETS60NDB-ETS50NDB		ES60NDB
3 Compact 318 ti	(E36)	07/95→08/00			MAG62DB	ETS60NDB-ETS50NDB		ES60NDB
3 Compact 323 ti	(E36)	08/97→08/00		RUN72D	MAG74D	ETS74ND	ETS70D1N-ETS74DI	476420ES
3 Compact 318 tds	(E36)	01/95→08/00		RUN95D		ETS92ND-ETS95D1N		434440ES
3 Coupe 316 i	(E36)	09/93→04/99			MAG62DB	ETS60NDB-ETS50NDB		ES60NDB
3 Coupe 318 is	(E36)	03/92→10/95			MAG62DB	ETS60NDB-ETS50NDB		ES60NDB
3 Coupe 318 is	(E36)	09/95→04/99			MAG62DB	ETS60NDB-ETS50NDB		ES60NDB
3 Coupe 320 i	(E36)	03/92→04/99			MAG72DB	ETS71NDB		
3 Coupe 323 i 2.5	(E36)	03/95→04/99		RUN72D	MAG74D	ETS74ND	ETS70D1N-ETS74DI	476420ES
3 Coupe 325 i	(E36)	03/92→04/99			MAG72DB	ETS71NDB		
3 Coupe 328 i	(E36)	01/95→04/99		RUN72D	MAG74D	ETS74ND	ETS70D1N-ETS74DI	476420ES
3 Coupe M3 3.0	(E36)	10/92→01/95		RUN72D	MAG74D	ETS74ND	ETS70D1N-ETS74DI	476420ES
3 Coupe M3 3.0	(E36)	01/95→10/95		RUN72D	MAG74D	ETS74ND	ETS70D1N-ETS74DI	476420ES
3 Coupe M3 3.2	(E36)	10/95→04/99		RUN72D	MAG74D	ETS74ND	ETS70D1N-ETS74DI	476420ES
3 Convertible 318 i	(E36)	01/94→04/99			MAG62DB	ETS60NDB-ETS50NDB		ES60NDB
3 Convertible 320 i	(E36)	12/93→04/99			MAG72DB	ETS71NDB		
3 Convertible 323 i 2.5	(E36)	06/95→04/99		RUN72D	MAG74D	ETS74ND	ETS70D1N-ETS74DI	476420ES
3 Convertible 325 i	(E36)	03/93→03/95			MAG72DB	ETS71NDB		
3 Convertible 328 i	(E36)	03/95→04/99		RUN72D	MAG74D	ETS74ND	ETS70D1N-ETS74DI	476420ES
3 Convertible M3 3.0	(E36)	01/94→10/95		RUN72D	MAG74D	ETS74ND	ETS70D1N-ETS74DI	476420ES
3 Convertible M3 3.2	(E36)	10/95→04/99		RUN72D	MAG74D	ETS74ND	ETS70D1N-ETS74DI	476420ES
3 Touring 316 i	(E36)	01/96→10/99			MAG62DB	ETS60NDB-ETS50NDB		ES60NDB
3 Touring 318 i	(E36)	07/95→10/99			MAG62DB	ETS60NDB-ETS50NDB		ES60NDB
3 Touring 320 i	(E36)	01/95→10/99			MAG72DB	ETS71NDB		
3 Touring 323 i 2.5	(E36)	09/95→10/99			MAG72DB	ETS71NDB		
3 Touring 328 i	(E36)	01/95→10/99			MAG72DB	ETS71NDB		
3 Touring 318 tds	(E36)	01/95→10/99			MAG72DB	ETS71NDB		
3 Touring 325 tds	(E36)	01/95→10/99		RUN95D		ETS92ND-ETS95D1N		434440ES
3 316 i	(E46)	04/00→02/05			MAG62DB	ETS60NDB-ETS50NDB		ES60NDB
3 316 i	(E46)	06/02→02/05			MAG62DB	ETS60NDB-ETS50NDB		ES60NDB
3 316 i	(E46)	02/02→02/05			MAG62DB	ETS60NDB-ETS50NDB		ES60NDB
3 316 i	(E46)	09/98→02/05			MAG62DB	ETS60NDB-ETS50NDB		ES60NDB
3 318 i	(E46)	02/98→09/01		RUN72D	MAG74D	ETS74ND	ETS70D1N-ETS74DI	476420ES

	Design		START	RUN	MAGIS	ETS	ETS alternative	ES
BMW								
3 318 i	(E46)	09/01→02/05		RUN72D	MAG74D	ETS74ND	ETS70D1N-ETS74DI	476420ES
3 320 i	(E46)	03/98→09/00	AGM70D		MAG72DB	ETS71NDB		
3 320 i	(E46)	09/00→02/05		RUN72D	MAG74D	ETS74ND	ETS70D1N-ETS74DI	476420ES
3 323 i	(E46)	03/98→09/00	AGM70D	RUN72D	MAG74D	ETS74ND	ETS70D1N-ETS74DI	476420ES
3 325 i	(E46)	09/00→02/05	AGM70D		MAG82D	ETS80ND		
3 325 xi	(E46)	09/00→02/05	AGM70D		MAG82D	ETS80ND		
3 328 i	(E46)	02/98→06/00	AGM70D	RUN72D	MAG74D	ETS74ND	ETS70D1N-ETS74DI	476420ES
3 330 i	(E46)	06/00→02/05		RUN72D	MAG74D	ETS74ND	ETS70D1N-ETS74DI	476420ES
3 330 xi	(E46)	06/00→02/05		RUN72D	MAG74D	ETS74ND	ETS70D1N-ETS74DI	476420ES
3 318 d	(E46)	09/01→03/03	AGM80D		MAG82D	ETS80ND		
3 318 d	(E46)	03/03→02/05			MAG82D	ETS80ND		
3 320 d	(E46)	04/98→09/01	AGM80D		MAG82D	ETS80ND		
3 320 d	(E46)	09/01→02/05			MAG82D	ETS80ND		
3 330 d	(E46)	10/99→02/05		RUN95D		ETS92ND-ETS95D1N		434440ES
3 330 xd	(E46)	06/00→02/05		RUN95D		ETS92ND-ETS95D1N		434440ES
3 330 d	(E46)	03/03→02/05		RUN95D		ETS92ND-ETS95D1N		434440ES
3 330 xd	(E46)	03/03→02/05		RUN95D		ETS92ND-ETS95D1N		434440ES
3 Compact 1.6 Ti	(E46)	06/02→02/05		RUN50D				
3 Compact 316 ti	(E46)	06/02→02/05			MAG62DB	ETS60NDB-ETS50NDB		ES60NDB
3 Compact 316 ti	(E46)	06/01→02/05			MAG62DB	ETS60NDB-ETS50NDB		ES60NDB
3 Compact 318 ti	(E46)	09/01→02/05		RUN72D	MAG74D	ETS74ND	ETS70D1N-ETS74DI	476420ES
3 Compact 2.0 TD	(E46)	10/01→12/02			MAG82D	ETS80ND		
3 Compact 325 ti	(E46)	06/01→02/05			MAG82D	ETS80ND		
3 Compact 318 td	(E46)	03/03→02/05			MAG82D	ETS80ND		
3 Compact 320 td	(E46)	09/01→02/05			MAG82D	ETS80ND		
3 Coupe 316 Ci	(E46)	04/00→		RUN72D				
3 Coupe 316 Ci	(E46)	06/02→		RUN72D				
3 Coupe 318 Ci	(E46)	11/99→09/01		RUN72D	MAG74D	ETS74ND	ETS70D1N-ETS74DI	476420ES
3 Coupe 318 Ci	(E46)	09/01→		RUN72D				
3 Coupe 318 Ci	(E46)	03/05→		RUN72D				
3 Coupe 320 Ci	(E46)	08/99→09/00	AGM70D		MAG72DB	ETS71NDB		
3 Coupe 320 Ci	(E46)	09/00→			MAG82D	ETS80ND		
3 Coupe 323 Ci	(E46)	04/99→09/00	AGM70D	RUN72D	MAG74D	ETS74ND	ETS70D1N-ETS74DI	476420ES
3 Coupe 325 Ci	(E46)	09/00→	AGM70D	RUN72D				
3 Coupe 328 Ci	(E46)	04/99→06/00	AGM70D	RUN72D	MAG74D	ETS74ND	ETS70D1N-ETS74DI	476420ES
3 Coupe 330 Ci	(E46)	06/00→	AGM70D	RUN72D				
3 Coupe 330 xi	(E46)	06/00→	AGM70D	RUN72D				
3 Coupe M3 3.2	(E46)	06/00→	AGM70D		MAG82D	ETS80ND		
3 Coupe M3 CSL	(E46)	06/03→		RUN72D				
3 Coupe 320 Cd	(E46)	11/03→	AGM70D		MAG82D	ETS80ND		
3 Coupe 330 Cd	(E46)	03/03→	AGM70D	RUN95D		ETS92ND-ETS95D1N		434440ES
3 Convertible 318 Ci	(E46)	02/05→			MAG82D	ETS80ND		
3 Convertible 320 Ci	(E46)	09/00→	AGM70D		MAG82D	ETS80ND		
3 Convertible 323 Ci	(E46)	04/00→09/00	AGM70D	RUN72D	MAG74D	ETS74ND	ETS70D1N-ETS74DI	476420ES
3 Convertible 325 Ci	(E46)	09/00→	AGM70D	RUN72D				
3 Convertible 330 Ci	(E46)	06/00→	AGM70D	RUN72D				
3 Convertible M3 3.2	(E46)	04/01→	AGM70D		MAG82D	ETS80ND		

	Design		START	RUN	MAGIS	ETS	ETS alternative	ES
BMW								
3 Convertible 320 Cd	(E46)	02/05→	AGM80D		MAG82D	ETS80ND		
3 Convertible 330 Cd	(E46)	08/05→	AGM90D	RUN95D		ETS92ND-ETS95D1N		434440ES
3 Convertible 320i	Stop/Start , RB , B	03/07→	AGM90D					
3 Convertible 320d	Stop/Start , RB , B	03/07→	AGM90D					
3 Touring 316 i	(E46)	06/02→02/05			MAG62DB	ETS60NDB-ETS50NDB		ES60NDB
3 Touring 316 i	(E46)	03/02→02/05			MAG62DB	ETS60NDB-ETS50NDB		ES60NDB
3 Touring 318 i	(E46)	10/99→09/01		RUN72D	MAG74D	ETS74ND	ETS70D1N-ETS74DI	476420ES
3 Touring 318 i	(E46)	09/01→02/05		RUN72D	MAG74D	ETS74ND	ETS70D1N-ETS74DI	476420ES
3 Touring 320 i	(E46)	10/99→09/00	AGM70D		MAG72DB	ETS71NDB		
3 Touring 320 i	(E46)	09/00→02/05		RUN72D	MAG74D	ETS74ND	ETS70D1N-ETS74DI	476420ES
3 Touring 325 i	(E46)	09/00→02/05	AGM70D		MAG82D	ETS80ND		
3 Touring 325 xi	(E46)	09/00→02/05	AGM70D		MAG82D	ETS80ND		
3 Touring 328 i	(E46)	10/99→06/00	AGM70D	RUN72D	MAG74D	ETS74ND	ETS70D1N-ETS74DI	476420ES
3 Touring 330 i	(E46)	06/00→02/05	AGM70D	RUN72D	MAG74D	ETS74ND	ETS70D1N-ETS74DI	476420ES
3 Touring 330 xi	(E46)	06/00→02/05	AGM70D	RUN72D	MAG74D	ETS74ND	ETS70D1N-ETS74DI	476420ES
3 Touring 318 d	(E46)	03/02→02/05	AGM80D		MAG82D	ETS80ND		
3 Touring 318 d	(E46)	03/03→02/05			MAG82D	ETS80ND		
3 Touring 320 d	(E46)	03/00→09/01	AGM80D		MAG82D	ETS80ND		
3 Touring 320 d	(E46)	09/01→02/05			MAG82D	ETS80ND		
3 Touring 330 d	(E46)	10/99→02/05	AGM90D	RUN95D		ETS92ND-ETS95D1N		434440ES
3 Touring 330 xd		10/99→	AGM90D					
3 Touring 330 xd	(E46)	06/00→02/05		RUN95D		ETS92ND-ETS95D1N		434440ES
3 Touring 330 d	(E46)	03/03→02/05		RUN95D		ETS92ND-ETS95D1N		434440ES
3 Touring 330 xd	(E46)	03/03→02/05		RUN95D		ETS92ND-ETS95D1N		434440ES
3 316i	Stop/Start , RB , B	09/07→	AGM90D					
3 318i	(E90)	09/05→03/07	AGM70D		MAG82D	ETS80ND		
3 318i	Stop/Start , RB , B	09/07→	AGM90D					
3 320i	(E90)	01/05→03/07	AGM70D	RUN72D	MAG74D	ETS74ND	ETS70D1N-ETS74DI	476420ES
3 320i	Stop/Start , RB , B	09/07→	AGM90D					
3 323i	(E90)	04/06→06/07	AGM70D	RUN72D	MAG74D	ETS74ND	ETS70D1N-ETS74DI	476420ES
3 320 si	(E90)	05/06→	AGM70D	RUN62D				
3 325i	(E90)	01/05→	AGM70D	RUN72D				
3 325xi	(E90)	01/05→	AGM70D	RUN72D				
3 335i	(E90)	10/06→	AGM70D	RUN72D				
3 325xi	(E90)	09/07→	AGM70D	RUN72D	MAG74D	ETS74ND	ETS70D1N-ETS74DI	476420ES
3 325i xDrive	(E90)	09/08→	AGM80D	RUN72D	MAG74D	ETS74ND	ETS70D1N-ETS74DI	476420ES
3 328i	(E90)	07/05→11/07	AGM70D	RUN72D	MAG74D	ETS74ND	ETS70D1N-ETS74DI	476420ES
3 330i	(E90)	01/05→	AGM70D	RUN72D	MAG74D	ETS74ND	ETS70D1N-ETS74DI	476420ES
3 330xi	(E90)	01/05→	AGM70D	RUN72D	MAG74D	ETS74ND	ETS70D1N-ETS74DI	476420ES
3 330xi	(E90)	09/07→		RUN72D	MAG74D	ETS74ND	ETS70D1N-ETS74DI	476420ES
3 330i xDrive	(E90)	09/08→	AGM80D	RUN72D	MAG74D	ETS74ND	ETS70D1N-ETS74DI	476420ES
3 335i	(E90)	09/06→	AGM70D	RUN72D				
3 335xi	(E90)	09/07→	AGM70D	RUN72D	MAG74D	ETS74ND	ETS70D1N-ETS74DI	476420ES
3 335i xDrive	(E90)	09/08→	AGM80D	RUN72D	MAG74D	ETS74ND	ETS70D1N-ETS74DI	476420ES
3 318d	(E90)	09/05→			MAG82D	ETS80ND		
3 318d	(E90)	09/05→			MAG82D	ETS80ND		
3 318d	Stop/Start , RB , B	01/07→	AGM90D					

	Design		START	RUN	MAGIS	ETS	ETS alternative	ES
BMW								
3 320d	(E90)	09/05→			MAG82D	ETS80ND		
3 320d	(E90)	01/05→			MAG82D	ETS80ND		
3 320d	Stop/Start , RB , B	09/07→	AGM90D					
3 320d x Drive	Stop/Start , RB , B	09/08→	AGM90D					
3 325d	(E90)	09/06→		RUN95D		ETS92ND-ETS95D1N		434440ES
3 325d		09/08→	AGM90D					
3 330d	(E90)	09/05→	AGM90D	RUN95D		ETS92ND-ETS95D1N		434440ES
3 330xd	(E90)	09/05→	AGM90D	RUN95D		ETS92ND-ETS95D1N		434440ES
3 335d	(E90)	09/06→		RUN95D		ETS92ND-ETS95D1N		434440ES
3 Touring 316i	Stop/Start , RB , B	09/07→	AGM90D					
3 Touring 318i	(E91)	01/06→	AGM70D		MAG82D	ETS80ND		
3 Touring 318i	Stop/Start , RB , B	09/07→	AGM90D					
3 Touring 320i	(E91)	09/05→	AGM70D		MAG72DB	ETS71NDB		
3 Touring 320i	Stop/Start , RB , B	09/07→	AGM90D					
3 Touring 323i	(E91)	04/06→06/07	AGM70D	RUN72D	MAG74D	ETS74ND	ETS70D1N-ETS74DI	476420ES
3 Touring 325i	(E91)	09/05→	AGM70D	RUN72D				
3 Touring 325xi	(E91)	09/05→	AGM70D	RUN72D				
3 Touring 325xi	(E91)	09/07→		RUN72D				
3 Touring 330i	(E91)	09/05→	AGM70D		MAG82D	ETS80ND		
3 Touring 330xi	(E91)	09/05→	AGM70D	RUN72D				
3 Touring 335i	(E91)	09/06→	AGM70D	RUN72D				
3 Touring 318d	(E91)	09/05→	AGM80D		MAG82D	ETS80ND		
3 Touring 318d	Stop/Start , RB , B	09/07→	AGM90D					
3 Touring 320d	(E91)	09/05→	AGM80D		MAG82D	ETS80ND		
3 Touring 320d	(E91)	09/05→			MAG82D	ETS80ND		
3 Touring 320d	Stop/Start , RB , B	09/07→	AGM90D					
3 Touring 320d x Drive	Stop/Start , RB , B	09/07→	AGM90D					
3 Touring 325d	(E91)	09/06→		RUN95D		ETS92ND-ETS95D1N		434440ES
3 Touring 330d	(E91)	09/05→		RUN95D		ETS92ND-ETS95D1N		434440ES
3 Touring 330xd	(E91)	09/05→			MAG82D	ETS80ND		
3 Touring 335d	(E91)	09/06→	AGM90D	RUN95D		ETS92ND-ETS95D1N		434440ES
3 Coupe 320i	(E92)	11/06→06/07	AGM70D		MAG72DB	ETS71NDB		
3 Coupe 320d	Stop/Start , RB , B	03/07→	AGM90D					
3 Coupe 320 d X Drive	Stop/Start , RB , B	03/07→	AGM90D					
3 Coupe 320i	Stop/Start , RB , B	09/08→	AGM90D					
3 Coupe 323i	(E92)	06/06→			MAG82D	ETS80ND		
3 Coupe 325i	(E92)	09/06→	AGM70D	RUN72D				
3 Coupe 325xi	(E92)	09/06→	AGM70D	RUN72D				
3 Coupe 328i	(E92)	08/06→11/07	AGM70D	RUN72D	MAG74D	ETS74ND	ETS70D1N-ETS74DI	476420ES
3 Coupe 330i	(E92)	09/06→		RUN72D	MAG74D	ETS74ND	ETS70D1N-ETS74DI	476420ES
3 Coupe 330xi	(E92)	09/06→	AGM70D	RUN72D	MAG74D	ETS74ND	ETS70D1N-ETS74DI	476420ES
3 Coupe 330i	(E92)	09/06→		RUN72D				
3 Coupe 330xi	(E92)	09/06→		RUN72D	MAG74D	ETS74ND	ETS70D1N-ETS74DI	476420ES
3 Coupe 335i	(E92)	09/06→	AGM70D	RUN72D				
3 Coupe 335xi	(E92)	09/06→	AGM70D	RUN72D				
3 Coupe 330d	(E92)	09/06→	AGM90D	RUN95D		ETS92ND-ETS95D1N		434440ES
3 Coupe 330xd	(E92)	09/06→	AGM90D	RUN95D		ETS92ND-ETS95D1N		434440ES

	Design		START	RUN	MAGIS	ETS	ETS alternative	ES
BMW								
3 Coupe 335d	(E92)	09/06→	AGM90D	RUN95D		ETS92ND-ETS95D1N		434440ES
5 525 i X 24V	(E34)	10/91→09/95			MAG72DB	ETS71NDB		
5 530 i V8	(E34)	09/92→09/95		RUN95D		ETS92ND-ETS95D1N		434440ES
5 540 i V8	(E34)	09/92→09/95		RUN95D		ETS92ND-ETS95D1N		434440ES
5 M5 3.8	(E34)	03/92→09/95		RUN95D		ETS92ND-ETS95D1N		434440ES
5 525 td	(E34)	04/93→09/95		RUN95D		ETS92ND-ETS95D1N		434440ES
5 525 tds	(E34)	09/91→09/95		RUN95D		ETS92ND-ETS95D1N		434440ES
5 Touring 518 i	(E34)	03/93→09/94		RUN62D	MAG62D	ETS62ND	ETS60D3N	438320ES
5 Touring 518 i	(E34)	09/94→01/97		RUN62D	MAG62D	ETS62ND	ETS60D3N	438320ES
5 Touring 518 g	(E34)	11/95→06/96		RUN62D	MAG62D	ETS62ND	ETS60D3N	438320ES
5 Touring 520 i	(E34)	11/91→01/97			MAG72DB	ETS71NDB		
5 Touring 525 i	(E34)	11/91→01/97			MAG72DB	ETS71NDB		
5 Touring 525 i X	(E34)	02/92→01/97			MAG72DB	ETS71NDB		
5 Touring 530 i V8	(E34)	09/92→01/97			MAG88DB	ETS85NDB	ETS88D1N	ES90NDB
5 Touring 540 i	(E34)	09/93→01/97			MAG88DB	ETS85NDB	ETS88D1N	ES90NDB
5 Touring M5 3.8	(E34)	09/94→01/97		RUN95D		ETS92ND-ETS95D1N		434440ES
5 Touring 525 td	(E34)	03/93→01/97		RUN95D		ETS92ND-ETS95D1N		434440ES
5 Touring 525 tds	(E34)	12/91→01/97		RUN95D		ETS92ND-ETS95D1N		434440ES
5 520 i	(E39)	04/99→06/03			MAG82D	ETS80ND		
5 520 i	(E39)	01/96→09/00			MAG82D	ETS80ND		
5 520 i	(E39)	09/00→06/03			MAG82D	ETS80ND		
5 523 i	(E39)	11/95→09/00		RUN72D	MAG74D	ETS74ND	ETS70D1N-ETS74DI	476420ES
5 525 i	(E39)	09/00→06/03		RUN72D	MAG74D	ETS74ND	ETS70D1N-ETS74DI	476420ES
5 528 i	(E39)	11/95→09/00			MAG82D	ETS80ND		
5 530 i	(E39)	09/00→06/03		RUN95D		ETS92ND-ETS95D1N		434440ES
5 535 i	(E39)	04/96→03/99			MAG88DB	ETS85NDB	ETS88D1N	ES90NDB
5 535 i	(E39)	04/99→06/03			MAG88DB	ETS85NDB	ETS88D1N	ES90NDB
5 540 i	(E39)	04/96→06/03			MAG88DB	ETS85NDB	ETS88D1N	ES90NDB
5 M5	(E39)	10/98→06/03		RUN95D		ETS92ND-ETS95D1N		434440ES
5 520 d	(E39)	02/00→06/03		RUN95D		ETS92ND-ETS95D1N		434440ES
5 525 td	(E39)	01/97→06/03		RUN95D		ETS92ND-ETS95D1N		434440ES
5 525 d	(E39)	02/00→06/03		RUN95D		ETS92ND-ETS95D1N		434440ES
5 525 tds	(E39)	01/96→06/03		RUN95D		ETS92ND-ETS95D1N		434440ES
5 530 d	(E39)	08/98→09/00		RUN95D		ETS92ND-ETS95D1N		434440ES
5 530 d	(E39)	09/00→06/03		RUN95D		ETS92ND-ETS95D1N		434440ES
5 Touring 520 i	(E39)	04/99→05/04		RUN95D		ETS92ND-ETS95D1N		434440ES
5 Touring 520 i	(E39)	01/97→09/00		RUN95D		ETS92ND-ETS95D1N		434440ES
5 Touring 520 i	(E39)	09/00→05/04		RUN95D		ETS92ND-ETS95D1N		434440ES
5 Touring 523 i	(E39)	01/97→09/00		RUN72D	MAG74D	ETS74ND	ETS70D1N-ETS74DI	476420ES
5 Touring 525 i	(E39)	09/00→05/04		RUN95D		ETS92ND-ETS95D1N		434440ES
5 Touring 528 i	(E39)	01/97→09/00			MAG82D	ETS80ND		
5 Touring 530 i	(E39)	09/00→05/04		RUN95D		ETS92ND-ETS95D1N		434440ES
5 Touring 540 i	(E39)	01/97→05/04		RUN95D		ETS92ND-ETS95D1N		434440ES
5 Touring 520 d	(E39)	02/00→09/03			MAG82D	ETS80ND		
5 Touring 525 d	(E39)	02/00→05/04		RUN95D		ETS92ND-ETS95D1N		434440ES
5 Touring 525 tds	(E39)	03/97→05/04		RUN95D		ETS92ND-ETS95D1N		434440ES
5 Touring 530 d	(E39)	08/98→09/00		RUN95D		ETS92ND-ETS95D1N		434440ES

	Design		START	RUN	MAGIS	ETS	ETS alternative	ES
BMW								
5 Touring 530 d	(E39)	09/00→05/04		RUN95D		ETS92ND-ETS95D1N		434440ES
5 520i	(E60)	07/03→	AGM80D		MAG82D	ETS80ND		
5 520i		09/07→	AGM80D					
5 523i		01/07→	AGM80D					
5 523i	(E60)	07/05→	AGM80D	RUN95D		ETS92ND-ETS95D1N		434440ES
5 525i	(E60)	09/03→	AGM90D		MAG82D	ETS80ND		
5 525i	(E60)	07/05→			MAG82D	ETS80ND		
5 525i		01/07→	AGM80D					
5 525xi		09/03→	AGM90D					
5 525xi	(E60)	07/05→			MAG82D	ETS80ND		
5 540i	(E60)	08/05→		RUN95D		ETS92ND-ETS95D1N		434440ES
5 530i	(E60)	07/03→		RUN95D		ETS92ND-ETS95D1N		434440ES
5 3.0	(E60)	03/05→			MAG82D	ETS80ND		
5 530i	(E60)	07/05→		RUN95D		ETS92ND-ETS95D1N		434440ES
5 530i		01/07→	AGM80D					
5 530xi		07/03→	AGM90D					
5 530xi	(E60)	07/05→			MAG82D	ETS80ND		
5 540i	(E60)	07/05→	AGM90D	RUN95D		ETS92ND-ETS95D1N		434440ES
5 545i	(E60)	09/03→	AGM90D	RUN95D		ETS92ND-ETS95D1N		434440ES
5 550i	(E60)	07/05→	AGM90D	RUN95D		ETS92ND-ETS95D1N		434440ES
5 M5	(E60)	09/04→	AGM90D	RUN95D		ETS92ND-ETS95D1N		434440ES
5 520d	(E60)	09/05→	AGM90D	RUN95D		ETS92ND-ETS95D1N		434440ES
5 520d	(E60)	07/05→		RUN95D		ETS92ND-ETS95D1N		434440ES
5 520d		09/07→	AGM80D					
5 525d	(E60)	12/04→		RUN95D		ETS92ND-ETS95D1N		434440ES
5 525d	(E60)	06/04→	AGM90D	RUN95D		ETS92ND-ETS95D1N		434440ES
5 530d	(E60)	07/03→		RUN95D		ETS92ND-ETS95D1N		434440ES
5 530d	(E60)	07/03→	AGM90D	RUN95D		ETS92ND-ETS95D1N		434440ES
5 530xd	(E60)	07/05→		RUN95D		ETS92ND-ETS95D1N		434440ES
5 535d	(E60)	09/04→	AGM90D	RUN95D		ETS92ND-ETS95D1N		434440ES
5 Touring 520i	(E61)	06/04→	AGM80D		MAG82D	ETS80ND		
5 Touring 523i	(E61)	07/05→	AGM80D		MAG82D	ETS80ND		
5 Touring 525i	(E61)	06/04→	AGM90D		MAG82D	ETS80ND		
5 Touring 525i	(E61)	07/05→			MAG82D	ETS80ND		
5 Touring 525xi	(E61)	07/05→			MAG82D	ETS80ND		
5 Touring 530i	(E61)	06/04→	AGM90D	RUN95D		ETS92ND-ETS95D1N		434440ES
5 Touring 530i	(E61)	07/05→		RUN95D		ETS92ND-ETS95D1N		434440ES
5 Touring 530xi	(E61)	07/05→		RUN95D		ETS92ND-ETS95D1N		434440ES
5 Touring 545i	(E61)	06/04→	AGM90D	RUN95D		ETS92ND-ETS95D1N		434440ES
5 Touring 550i	(E61)	07/05→	AGM90D	RUN95D		ETS92ND-ETS95D1N		434440ES
5 Touring 520d	(E61)	09/05→		RUN95D		ETS92ND-ETS95D1N		434440ES
5 Touring 520d	(E61)	07/05→	AGM90D	RUN95D		ETS92ND-ETS95D1N		434440ES
5 Touring 525d	(E61)	12/04→		RUN95D		ETS92ND-ETS95D1N		434440ES
5 Touring 525d	(E61)	06/04→	AGM90D	RUN95D		ETS92ND-ETS95D1N		434440ES
5 Touring 530d	(E61)	06/04→	AGM90D	RUN95D		ETS92ND-ETS95D1N		434440ES
5 Touring 530d	(E61)	07/05→		RUN95D		ETS92ND-ETS95D1N		434440ES
5 Touring 530xd	(E61)	07/05→		RUN95D		ETS92ND-ETS95D1N		434440ES

	Design		START	RUN	MAGIS	ETS	ETS alternative	ES
BMW								
5 Touring 535d	(E61)	09/04→	AGM90D	RUN95D		ETS92ND-ETS95D1N		434440ES
6 630i	(E63)	09/04→	AGM80D			ETS110D1N		
6 645Ci	(E63)	01/04→	AGM90D			ETS110D1N		
6 650i	(E63)	07/05→	AGM90D			ETS110D1N		
6 M6	(E63)	09/05→	AGM90D			ETS110D1N		
6 Convertible 630i	(E64)	09/04→				ETS110D1N		
6 Convertible 645Ci	(E64)	04/04→	AGM90D			ETS110D1N		
6 Convertible 650i	(E64)	07/05→	AGM90D			ETS110D1N		
6 Convertible M6	(E64)	07/06→	AGM90D			ETS110D1N		
7 730 i,iL V8	(E32)	04/92→09/94		RUN95D		ETS92ND-ETS95D1N		434440ES
7 740 i,iL V8	(E32)	04/92→09/94		RUN95D		ETS92ND-ETS95D1N		434440ES
7 728 i,iL	(E38)	08/95→11/01		RUN95D		ETS92ND-ETS95D1N		434440ES
7 730 i,iL	(E38)	10/94→11/01		RUN95D		ETS92ND-ETS95D1N		434440ES
7 730 i,iL	(E38)	10/94→11/01		RUN95D		ETS92ND-ETS95D1N		434440ES
7 735 i,iL	(E38)	01/96→11/01		RUN95D		ETS92ND-ETS95D1N		434440ES
7 740 i,iL	(E38)	10/94→11/01		RUN95D		ETS92ND-ETS95D1N		434440ES
7 740 i,iL	(E38)	01/96→11/01		RUN95D		ETS92ND-ETS95D1N		434440ES
7 750 i,iL	(E38)	12/94→11/01		RUN95D		ETS92ND-ETS95D1N		434440ES
7 725 tds	(E38)	04/96→11/01		RUN95D		ETS92ND-ETS95D1N		434440ES
7 730 d	(E38)	08/98→04/00	AGM90D	RUN95D		ETS92ND-ETS95D1N		434440ES
7 730 d	(E38)	04/00→11/01		RUN95D		ETS92ND-ETS95D1N		434440ES
7 740 d	(E38)	05/99→11/01	AGM90D	RUN95D		ETS92ND-ETS95D1N		434440ES
7 735 i,Li	(E65, E66)	11/01→	AGM90D	RUN95D		ETS92ND-ETS95D1N		434440ES
7 745 i,Li	(E65, E66)	11/01→	AGM90D	RUN95D		ETS92ND-ETS95D1N		434440ES
8 840 i	(E31)	02/93→02/96			MAG72DB	ETS71NDB		
8 840 Ci	(E31)	01/96→12/99			MAG72DB	ETS71NDB		
8 850 i,Ci	(E31)	04/90→10/94			MAG72DB	ETS71NDB		
8 850 Ci	(E31)	09/94→12/99			MAG72DB	ETS71NDB		
8 850 CSi	(E31)	04/93→12/96			MAG72DB	ETS71NDB		
X1 sDrive 18d,xDrive 18d	Stop/Start , RB	10/09→	AGM80D					
X1 sDrive 20d, xDrive 20d,x Drive 23d	Stop/Start , RB	10/09→	AGM80D					
X3 2.0 i	(E83)	07/05→			MAG82D	ETS80ND		
X3 2.5 i	(E83)	01/04→	AGM80D		MAG82D	ETS80ND		
X3 2.5 si	(E83)	09/06→	AGM80D		MAG82D	ETS80ND		
X3 3.0 i	(E83)	01/04→	AGM80D	RUN95D		ETS92ND-ETS95D1N		434440ES
X3 3.0 si	(E83)	09/06→			MAG82D	ETS80ND		
X3 2.0 d	(E83)	10/04→	AGM80D	RUN95D		ETS92ND-ETS95D1N		434440ES
X3 3.0 d	(E83)	01/04→		RUN95D		ETS92ND-ETS95D1N		434440ES
X3 3.0 d	(E83)	01/04→	AGM90D	RUN95D		ETS92ND-ETS95D1N		434440ES
X3 3.0 sd	(E83)	09/06→	AGM90D	RUN95D		ETS92ND-ETS95D1N		434440ES
X5 3.0 i	(E53)	05/00→	AGM80D	RUN95D		ETS92ND-ETS95D1N		434440ES
X5 3.0 i	(E53)	05/00→		RUN95D		ETS92ND-ETS95D1N		434440ES
X5 4.4 i	(E53)	05/00→	AGM90D	RUN95D		ETS92ND-ETS95D1N		434440ES
X5 4.4 i	(E53)	12/03→		RUN95D		ETS92ND-ETS95D1N		434440ES
X5 4.6 is	(E53)	02/02→	AGM90D	RUN95D		ETS92ND-ETS95D1N		434440ES
X5 4.8 is	(E53)	04/04→	AGM90D	RUN95D		ETS92ND-ETS95D1N		434440ES
X5 3.0 d	(E53)	05/01→	AGM90D	RUN95D		ETS92ND-ETS95D1N		434440ES

	Design		START	RUN	MAGIS	ETS	ETS alternative	ES
BMW								
X5 3.0 d	(E53)	12/03→		RUN95D		ETS92ND-ETS95D1N		434440ES
Z3 1.8		10/95→10/98		RUN72D	MAG74D	ETS74ND	ETS70D1N-ETS74DI	476420ES
Z3 1.9		01/99→01/03		RUN72D	MAG74D	ETS74ND	ETS70D1N-ETS74DI	476420ES
Z3 1.9		07/98→01/03		RUN72D	MAG74D	ETS74ND	ETS70D1N-ETS74DI	476420ES
Z3 1.9		10/95→03/99		RUN72D	MAG74D	ETS74ND	ETS70D1N-ETS74DI	476420ES
Z3 2.0		04/99→01/03		RUN72D	MAG74D	ETS74ND	ETS70D1N-ETS74DI	476420ES
Z3 2.2		08/00→01/03		RUN72D	MAG74D	ETS74ND	ETS70D1N-ETS74DI	476420ES
Z3 2.8		04/97→06/00		RUN72D	MAG74D	ETS74ND	ETS70D1N-ETS74DI	476420ES
Z3 3.0		06/00→01/03		RUN72D	MAG74D	ETS74ND	ETS70D1N-ETS74DI	476420ES
Z3 M 3.2		03/97→06/01		RUN72D	MAG74D	ETS74ND	ETS70D1N-ETS74DI	476420ES
Z3 M 3.2		06/01→01/03		RUN72D	MAG74D	ETS74ND	ETS70D1N-ETS74DI	476420ES
Z3 Coupe 2.8		07/97→06/00		RUN72D	MAG74D	ETS74ND	ETS70D1N-ETS74DI	476420ES
Z3 Coupe 3.0		06/00→06/03		RUN72D	MAG74D	ETS74ND	ETS70D1N-ETS74DI	476420ES
Z3 Coupe M 3.2		02/98→06/01		RUN72D	MAG74D	ETS74ND	ETS70D1N-ETS74DI	476420ES
Z3 Coupe M		08/00→06/03		RUN72D	MAG74D	ETS74ND	ETS70D1N-ETS74DI	476420ES
Z3 Coupe M 3.2		06/01→06/03		RUN72D	MAG74D	ETS74ND	ETS70D1N-ETS74DI	476420ES
Z4 2.2 i	(E85)	10/03→		RUN72D				
Z4 2.5 i	(E85)	01/06→		RUN72D				
Z4 2.5 i	(E85)	02/03→	AGM70D	RUN72D				
Z4 2.5 si	(E85)	01/06→		RUN72D				
Z4 3.0 i	(E85)	02/03→	AGM70D	RUN72D				
Z4 3.0 si	(E85)	01/06→		RUN72D				
Z4 3.2 M	(E85)	03/06→	AGM70D	RUN72D				
Z4 Coupe 3.0 si		03/06→		RUN72D				
Z4 Coupe 3.2 M		03/06→		RUN72D				
Z8 4.9		06/00→06/03	AGM90D	RUN95D		ETS92ND-ETS95D1N		434440ES
BUGATTI								
BUGAT EB 110 GT		09/91→12/96		RUN95D		ETS92ND-ETS95D1N		434440ES
BUGAT EB 110 S		09/92→12/96		RUN95D		ETS92ND-ETS95D1N		434440ES
BUICK								
BUICK LE SABRE 3.8		01/99→		RUN95D		ETS92ND-ETS95D1N		434440ES
CADILLAC								
BLS 2.0 T		04/06→		RUN72D	MAG74D	ETS74ND	ETS70D1N-ETS74DI	476420ES
BLS 2.0 T Flexpower		12/07→		RUN72D	MAG74D	ETS74ND	ETS70D1N-ETS74DI	476420ES
BLS 2.0 T		04/06→		RUN72D	MAG74D	ETS74ND	ETS70D1N-ETS74DI	476420ES
BLS 2.8 T		04/06→		RUN72D	MAG74D	ETS74ND	ETS70D1N-ETS74DI	476420ES
BLS 1.9 D		04/06→		RUN72D	MAG74D	ETS74ND	ETS70D1N-ETS74DI	476420ES
BLS 1.9 D		12/07→		RUN72D	MAG74D	ETS74ND	ETS70D1N-ETS74DI	476420ES
BLS Wagon 2.0 T		12/07→		RUN72D	MAG74D	ETS74ND	ETS70D1N-ETS74DI	476420ES
BLS Wagon 2.0 T Flexpower		12/07→		RUN72D	MAG74D	ETS74ND	ETS70D1N-ETS74DI	476420ES
BLS Wagon 2.0 T		12/07→		RUN72D	MAG74D	ETS74ND	ETS70D1N-ETS74DI	476420ES
BLS Wagon 2.8 T		12/07→		RUN72D	MAG74D	ETS74ND	ETS70D1N-ETS74DI	476420ES
BLS Wagon 1.9 D		12/07→		RUN72D	MAG74D	ETS74ND	ETS70D1N-ETS74DI	476420ES
BLS Wagon 1.9 D		12/07→		RUN72D	MAG74D	ETS74ND	ETS70D1N-ETS74DI	476420ES

	Design		START	RUN	MAGIS	ETS	ETS alternative	ES
CHEVROLET								
BLAZER '94 4.3 V6 All-wheel Drive		01/94→				ETS63NS		
CORSICA 2.2	(1_69)	01/91→12/96				ETS55NS		
CORSICA 2.2	(1_69)	01/94→12/96				ETS55NS		
CORVETTE 6.0	(C6)	09/04→				ETS63NS		
CORVETTE Z06 7.0	(C6)	03/06→				ETS63NS		
CORVETTE Convertible 6.0	(C6)	09/04→				ETS63NS		
EVANDA 2.0		03/05→		RUN62D	MAG62D	ETS62ND	ETS60D3N	438320ES
KALOS 1.2		03/05→				ETS55NS		
KALOS 1.4		03/05→				ETS55NS		
KALOS 1.4 16V		03/05→				ETS55NS		
KALOS Saloon 1.4 16V		03/05→				ETS55NS		
LACETTI 1.4 16V		03/05→				ETS55NS		
LACETTI 1.6		03/05→				ETS55NS		
LACETTI 1.8		08/05→				ETS55NS		
LACETTI 1.8		03/05→				ETS55NS		
MATIZ 0.8		03/05→						ES35240DJ
MATIZ 1.0		03/05→						ES35240DJ
MATIZ 1.0		03/05→						ES35240DJ
NUBIRA Saloon 1.6		03/05→				ETS55NS		
NUBIRA Saloon 1.8		03/05→				ETS55NS		
NUBIRA Estate 1.6		03/05→				ETS55NS		
NUBIRA Estate 1.8		03/05→				ETS55NS		

CHRYSLER								
CROSSFIRE 3.2		07/03→		RUN72D	MAG74D	ETS74ND	ETS70D1N-ETS74DI	476420ES
CROSSFIRE SRT-6		09/04→		RUN72D	MAG74D	ETS74ND	ETS70D1N-ETS74DI	476420ES
CROSSFIRE Roadster 3.2		05/04→		RUN72D	MAG74D	ETS74ND	ETS70D1N-ETS74DI	476420ES
CROSSFIRE Roadster SRT-6		09/04→		RUN72D	MAG74D	ETS74ND	ETS70D1N-ETS74DI	476420ES
NEON 1.8 16V	(PL)	09/97→08/99				ETS55NS		
NEON 2.0 16V	(PL)	05/94→08/99				ETS55NS		
NEON 2.0 16V	(PL)	06/94→08/99				ETS55NS		
NEON 2.0 16V	(PL)	04/96→08/99				ETS55NS		
NEON II 1.6		11/01→		RUN50D	MAG50D	ETS50ND	ETS50D3N-ETS50D4N	
NEON II 2.0 16V R/T		10/01→		RUN50D	MAG50D	ETS50ND	ETS50D3N-ETS50D4N	
PT CRUISER 1.6	(PT_)	11/01→		RUN50D	MAG50D-MAG45D	ETS50ND-ETS45ND	ETS50D3N-ETS50D4N	436210ES
PT CRUISER 2.0	(PT_)	10/04→			MAG62DB	ETS60NDB-ETS50NDB		ES60NDB
PT CRUISER 2.0	(PT_)	06/00→		RUN50D	MAG50D-MAG45D	ETS50ND-ETS45ND	ETS50D3N-ETS50D4N	436210ES
PT CRUISER 2.4	(PT_)	08/05→		RUN50D	MAG50D-MAG45D	ETS50ND-ETS45ND	ETS50D3N-ETS50D4N	436210ES
PT CRUISER 2.4	(PT_)	06/00→		RUN50D	MAG50D-MAG45D	ETS50ND-ETS45ND	ETS50D3N-ETS50D4N	436210ES
PT CRUISER GT 2.4	(PT_)	08/03→		RUN50D	MAG50D-MAG45D	ETS50ND-ETS45ND	ETS50D3N-ETS50D4N	436210ES
PT CRUISER 2.2 CRD	(PT_)	08/05→		RUN62D	MAG62D	ETS62ND	ETS60D3N	438320ES
PT CRUISER Convertible 2.4		03/04→		RUN62D	MAG62D	ETS62ND	ETS60D3N	438320ES
PT CRUISER Convertible 2.4 GT		03/04→		RUN62D	MAG62D	ETS62ND	ETS60D3N	438320ES
VIPER 8.0		07/98→		RUN95D		ETS92ND-ETS95D1N		434440ES
VIPER Convertible 8.0		07/98→		RUN95D		ETS92ND-ETS95D1N		434440ES
VISION 3.5 TSi		09/93→				ETS55NS		
VOYAGER I 2.5 i	(ES)	08/90→09/95				ETS63NS		

	Design		START	RUN	MAGIS	ETS	ETS alternative	ES
CHRYSLER								
VOYAGER I 3.3 i	(ES)	08/90→09/95				ETS63NS		
VOYAGER I 3.3 i AWD	(ES)	08/90→09/95				ETS63NS		
VOYAGER I 3.3 i	(ES)	08/90→09/95				ETS63NS		
VOYAGER I 3.3 i AWD	(ES)	08/90→09/95				ETS63NS		
VOYAGER I 2.5 TD	(ES)	01/92→09/95				ETS63NS		
VOYAGER II 2.0 i	(GS)	01/95→03/01				ETS63NS		
VOYAGER II 2.4 i	(GS)	01/95→03/01				ETS63NS		
VOYAGER II 3.0	(GS)	01/95→03/01				ETS63NS		
VOYAGER II 3.3 i	(GS)	01/95→03/01				ETS63NS		
VOYAGER II 3.8 i AWD	(GS)	01/95→03/01				ETS63NS		
VOYAGER II 3.8 i AWD	(GS)	01/95→03/01				ETS63NS		
VOYAGER II 2.5 TD	(GS)	01/95→03/01				ETS63NS		
VOYAGER III 2.4		02/00→				ETS63NS		
VOYAGER III 3.3		02/00→				ETS63NS		
VOYAGER III 3.3 AWD		02/00→				ETS63NS		
VOYAGER III 3.3 Flex-Fuel		02/00→				ETS63NS		
VOYAGER III 3.8		02/00→				ETS63NS		
VOYAGER III 3.8 AWD		02/00→				ETS63NS		
VOYAGER III 2.5 CRD		08/05→				ETS63NS		
VOYAGER III 2.5 CRD		02/00→				ETS63NS		
VOYAGER III 2.8 CRD		06/04→				ETS63NS		
300 C 2.7		09/04→	AGM80D		MAG82D	ETS80ND		
300 C 3.5		09/04→			MAG82D	ETS80ND		
300 C 5.7		09/04→			MAG82D	ETS80ND		
300 C 6.1 SRT8		06/05→			MAG82D	ETS80ND		
300 C 6.1 SRT8		06/05→			MAG82D	ETS80ND		
300 C 3.0 CRD		09/05→		RUN95D		ETS92ND-ETS95D1N		434440ES
300 C Touring 2.7		09/04→			MAG82D	ETS80ND		
300 C Touring 3.5		09/04→			MAG82D	ETS80ND		
300 C Touring 3.5 AWD		09/04→			MAG82D	ETS80ND		
300 C Touring 5.7		09/04→			MAG82D	ETS80ND		
300 C Touring 5.7 AWD		04/05→			MAG82D	ETS80ND		
300 C Touring 6.1 SRT8		06/05→			MAG82D	ETS80ND		
300 C Touring 3.0 CRD		09/05→		RUN95D		ETS92ND-ETS95D1N		434440ES
300 M 2.7 V6 24V	(LR)	11/98→08/00		RUN72D	MAG74D	ETS74ND	ETS70D1N-ETS74DI	476420ES
300 M 2.7 V6 24V	(LR)	08/00→09/04		RUN72D	MAG74D	ETS74ND	ETS70D1N-ETS74DI	476420ES
300 M 3.5 V6 24V	(LR)	08/00→09/04		RUN72D	MAG74D	ETS74ND	ETS70D1N-ETS74DI	476420ES
300 M 3.5 V6 24V	(LR)	07/98→08/00		RUN72D	MAG74D	ETS74ND	ETS70D1N-ETS74DI	476420ES
CITROËN								
AX 11 4x4	(ZA-_)	06/91→07/92		RUN50D	MAG50D-MAG45D	ETS50ND-ETS45ND	ETS50D3N-ETS50D4N	436210ES
AX 14 4x4	(ZA-_)	08/91→12/96		RUN50D	MAG50D-MAG45D	ETS50ND-ETS45ND	ETS50D3N-ETS50D4N	436210ES
AX 1.4 GTi	(ZA-_)	08/91→12/96		RUN50D	MAG50D-MAG45D	ETS50ND-ETS45ND	ETS50D3N-ETS50D4N	436210ES
AX 1.4 GTi	(ZA-_)	06/91→12/96		RUN50D	MAG50D-MAG45D	ETS50ND-ETS45ND	ETS50D3N-ETS50D4N	436210ES
AX 1.4 GTi	(ZA-_)	06/91→12/92		RUN50D	MAG50D-MAG45D	ETS50ND-ETS45ND	ETS50D3N-ETS50D4N	436210ES
AX 14 D	(ZA-_)	08/91→12/97		RUN62D	MAG62D	ETS62ND	ETS60D3N	438320ES
AX 15 D	(ZA-_)	08/94→12/97		RUN62D	MAG62D	ETS62ND	ETS60D3N	438320ES

	Design		START	RUN	MAGIS	ETS	ETS alternative	ES
CITROËN								
AX 15 D	(ZA-_)	08/94→12/97		RUN62D	MAG62D	ETS62ND	ETS60D3N	438320ES
BERLINGO 1.1 i (MFHDZ)	(MF)	07/96→		RUN50D	MAG50D-MAG45D	ETS50ND-ETS45ND	ETS50D3N-ETS50D4N	436210ES
BERLINGO 1.4 bivalent	(MF)	11/02→		RUN50D	MAG50D-MAG45D	ETS50ND-ETS45ND	ETS50D3N-ETS50D4N	436210ES
BERLINGO 1.4 bivalent	(MF)	11/02→10/05		RUN50D	MAG50D-MAG45D	ETS50ND-ETS45ND	ETS50D3N-ETS50D4N	436210ES
BERLINGO 1.4	(MF)	11/02→10/05		RUN50D	MAG50D-MAG45D	ETS50ND-ETS45ND	ETS50D3N-ETS50D4N	436210ES
BERLINGO 1.4	(MF)	05/05→		RUN50D	MAG50D-MAG45D	ETS50ND-ETS45ND	ETS50D3N-ETS50D4N	436210ES
BERLINGO 1.4 i (MFKFX)	(MF)	07/96→		RUN50D	MAG50D-MAG45D	ETS50ND-ETS45ND	ETS50D3N-ETS50D4N	436210ES
BERLINGO 1.4 i bivalent	(MF)	04/03→		RUN50D	MAG50D-MAG45D	ETS50ND-ETS45ND	ETS50D3N-ETS50D4N	436210ES
BERLINGO 1.6 16V (MFNFU)	(MF)	10/00→		RUN50D	MAG50D-MAG45D	ETS50ND-ETS45ND	ETS50D3N-ETS50D4N	436210ES
BERLINGO 1.6 16V	(MF)	11/02→		RUN50D	MAG50D-MAG45D	ETS50ND-ETS45ND	ETS50D3N-ETS50D4N	436210ES
BERLINGO 1.8 i (MFLFX)	(MF)	05/97→		RUN50D	MAG50D	ETS50ND	ETS50D3N-ETS50D4N	
BERLINGO 1.8 i 4WD (MFLFX)	(MF)	04/97→		RUN62D	MAG62D	ETS62ND	ETS60D3N	438320ES
BERLINGO 1.6 HDI 75	(MF)	07/05→		RUN62D	MAG62D	ETS62ND	ETS60D3N	438320ES
BERLINGO 1.6 HDI 90	(MF)	07/05→		RUN62D	MAG62D	ETS62ND	ETS60D3N	438320ES
BERLINGO 1.6 HDI 110	(MF)	08/05→		RUN62D	MAG62D	ETS62ND	ETS60D3N	438320ES
BERLINGO 1.8 D (MFA9A)	(MF)	07/98→		RUN62D	MAG62D	ETS62ND	ETS60D3N	438320ES
BERLINGO 1.9 D (MFWJZ)	(MF)	07/98→		RUN62D	MAG62D	ETS62ND	ETS60D3N	438320ES
BERLINGO 1.9 D 4WD (MFWJZ)	(MF)	07/98→		RUN62D	MAG62D	ETS62ND	ETS60D3N	438320ES
BERLINGO 1.9 D (MFDJY)	(MF)	07/96→		RUN62D	MAG62D	ETS62ND	ETS60D3N	438320ES
BERLINGO 2.0 HDI 90 (MFRHY)	(MF)	12/99→		RUN72D	MAG74D	ETS74ND	ETS70D1N-ETS74DI	476420ES
BERLINGO 2.0 HDi	(MF)	11/02→10/05		RUN72D	MAG74D	ETS74ND	ETS70D1N-ETS74DI	476420ES
BERLINGO electrique	(MF)	01/00→		RUN62D	MAG62D	ETS62ND	ETS60D3N	438320ES
BERLINGO Box 1.1 i (MAHDZ, MBHDZ)	(M_)	07/96→		RUN50D	MAG50D-MAG45D	ETS50ND-ETS45ND	ETS50D3N-ETS50D4N	436210ES
BERLINGO Box 1.4 bivalent	(M_)	11/02→		RUN50D	MAG50D-MAG45D	ETS50ND-ETS45ND	ETS50D3N-ETS50D4N	436210ES
BERLINGO Box 1.4 i (MBKFX)	(M_)	07/96→		RUN50D	MAG50D-MAG45D	ETS50ND-ETS45ND	ETS50D3N-ETS50D4N	436210ES
BERLINGO Box 1.4 i bivalent	(M_)	04/03→		RUN50D	MAG50D-MAG45D	ETS50ND-ETS45ND	ETS50D3N-ETS50D4N	436210ES
BERLINGO Box 1.6 16V	(M_)	10/00→		RUN50D	MAG50D-MAG45D	ETS50ND-ETS45ND	ETS50D3N-ETS50D4N	436210ES
BERLINGO Box 1.8 i	(M_)	08/99→10/02		RUN50D	MAG50D	ETS50ND	ETS50D3N-ETS50D4N	
BERLINGO Box 1.6 HDI 75	(M_)	07/05→		RUN62D	MAG62D	ETS62ND	ETS60D3N	438320ES
BERLINGO Box 1.6 HDI 90	(M_)	07/05→		RUN62D	MAG62D	ETS62ND	ETS60D3N	438320ES
BERLINGO Box 1.8 D (MBA9A, MCA9A)	(M_)	07/96→		RUN62D	MAG62D	ETS62ND	ETS60D3N	438320ES
BERLINGO Box 1.9 D 70 (MBWJZ, MCWJZ)	(M_)	04/99→		RUN62D	MAG62D	ETS62ND	ETS60D3N	438320ES
BERLINGO Box 1.9 D 70 4WD	(M_)	07/98→		RUN62D	MAG62D	ETS62ND	ETS60D3N	438320ES
BERLINGO Box 1.9 D	(M_)	07/96→		RUN62D	MAG62D	ETS62ND	ETS60D3N	438320ES
BERLINGO Box 2.0 HDI 90 (MBRHY, MCRHY)	(M_)	12/99→		RUN72D	MAG74D	ETS74ND	ETS70D1N-ETS74DI	476420ES
BERLINGO Box 2.0 HDI 90 4WD	(M_)	11/00→		RUN72D	MAG74D	ETS74ND	ETS70D1N-ETS74DI	476420ES
BERLINGO 1.6		04/08→		RUN50D	MAG50D	ETS50ND	ETS50D3N-ETS50D4N	
BERLINGO 1.6		04/08→		RUN50D	MAG50D	ETS50ND	ETS50D3N-ETS50D4N	
BERLINGO 1.6		11/09→		RUN50D	MAG50D	ETS50ND	ETS50D3N-ETS50D4N	
BERLINGO 1.6 HDi 75		04/08→		RUN62D	MAG62D	ETS62ND	ETS60D3N	438320ES
BERLINGO 1.6 HDi 90		04/08→		RUN62D	MAG62D	ETS62ND	ETS60D3N	438320ES
BERLINGO 1.6 HDi 110		04/08→		RUN62D	MAG62D	ETS62ND	ETS60D3N	438320ES
BERLINGO Box 1.6		04/08→		RUN50D	MAG50D	ETS50ND	ETS50D3N-ETS50D4N	
BERLINGO Box 1.6		04/08→		RUN50D	MAG50D	ETS50ND	ETS50D3N-ETS50D4N	
BERLINGO Box 1.6 HDi 75		04/08→		RUN62D	MAG62D	ETS62ND	ETS60D3N	438320ES
BERLINGO Box 1.6 HDi 90		04/08→		RUN62D	MAG62D	ETS62ND	ETS60D3N	438320ES

	Design		START	RUN	MAGIS	ETS	ETS alternative	ES
CITROËN								
BERLINGO Box 1.6 HDi 110		04/08→		RUN62D	MAG62D	ETS62ND	ETS60D3N	438320ES
BX Break 19 4x4	(XB-_)	10/90→05/91		RUN62D	MAG62D	ETS62ND	ETS60D3N	438320ES
BX Break 1.9 TZi	(XB-_)	02/92→12/94		RUN62D	MAG62D	ETS62ND	ETS60D3N	438320ES
BX Break 1.9 GTi 4x4	(XB-_)	02/92→06/94		RUN62D	MAG62D	ETS62ND	ETS60D3N	438320ES
BX Break 1.9 DT TXD	(XB-_)	02/92→12/94		RUN62D	MAG62D	ETS62ND	ETS60D3N	438320ES
C-CROSSER ENTERPRISE 2.2 HDi		01/09→		RUN72D				
C15 1.0 E	(VD-_)	11/92→07/96		RUN50D	MAG50D-MAG45D	ETS50ND-ETS45ND	ETS50D3N-ETS50D4N	436210ES
C15 1.4 i	(VD-_)	05/91→12/96		RUN50D	MAG50D-MAG45D	ETS50ND-ETS45ND	ETS50D3N-ETS50D4N	436210ES
C15 1.9 D	(VD-_)	12/00→12/05		RUN62D	MAG62D	ETS62ND	ETS60D3N	438320ES
C1 1.0	(PM_, PN_)	06/05→		RUN44D			ETS44D2N	
C1 1.4 HDi	(PM_, PN_)	06/05→		RUN50D	MAG50D-MAG45D	ETS50ND-ETS45ND	ETS50D3N-ETS50D4N	436210ES
C2 1.1	(JM_)	09/03→		RUN50D	MAG50D	ETS50ND	ETS50D3N-ETS50D4N	
C2 1.4	(JM_)	09/03→		RUN50D	MAG50D-MAG45D	ETS50ND-ETS45ND	ETS50D3N-ETS50D4N	436210ES
C2 1.4	(JM_)	10/06→		RUN50D	MAG50D	ETS50ND	ETS50D3N-ETS50D4N	
C2 1.4 16V	(JM_)	06/06→		RUN50D	MAG50D-MAG45D	ETS50ND-ETS45ND	ETS50D3N-ETS50D4N	436210ES
C2 1.6	(JM_)	09/03→		RUN50D	MAG50D-MAG45D	ETS50ND-ETS45ND	ETS50D3N-ETS50D4N	436210ES
C2 1.6 VTS	(JM_)	01/05→		RUN50D	MAG50D-MAG45D	ETS50ND-ETS45ND	ETS50D3N-ETS50D4N	436210ES
C2 1.4 HDi	(JM_)	09/03→		RUN62D	MAG62D	ETS62ND	ETS60D3N	438320ES
C2 1.6 HDi	(JM_)	09/05→		RUN62D	MAG62D	ETS62ND	ETS60D3N	438320ES
C2 ENTERPRISE 1.4 HDi		04/09→		RUN62D				
C3 1.1 i	(FC_)	02/02→		RUN50D	MAG50D-MAG45D	ETS50ND-ETS45ND	ETS50D3N-ETS50D4N	436210ES
C3 1.4 i	(FC_)	02/02→		RUN50D	MAG50D	ETS50ND	ETS50D3N-ETS50D4N	
C3 1.4 i Bivalent	(FC_)	02/02→		RUN50D	MAG50D-MAG45D	ETS50ND-ETS45ND	ETS50D3N-ETS50D4N	436210ES
C3 1.4 i	Stop/Start , A	12/03→	SST63D					
C3 1.6 16V	(FC_)	02/02→		RUN50D	MAG50D-MAG45D	ETS50ND-ETS45ND	ETS50D3N-ETS50D4N	436210ES
C3 1.4 HDi	(FC_)	02/02→		RUN62D	MAG62D	ETS62ND	ETS60D3N	438320ES
C3 1.4 16V HDi	(FC_)	02/02→		RUN62D	MAG62D	ETS62ND	ETS60D3N	438320ES
C3 1.6 16V HDi	(FC_)	10/05→		RUN62D	MAG62D	ETS62ND	ETS60D3N	438320ES
C3 1.6 16V HDi	(FC_)	09/05→		RUN62D	MAG62D	ETS62ND	ETS60D3N	438320ES
C3 Pluriel 1.4	(HB_)	05/03→		RUN50D	MAG50D-MAG45D	ETS50ND-ETS45ND	ETS50D3N-ETS50D4N	436210ES
C3 Pluriel 1.6	(HB_)	05/03→		RUN50D	MAG50D-MAG45D	ETS50ND-ETS45ND	ETS50D3N-ETS50D4N	436210ES
C3 Pluriel 1.4 HDi	(HB_)	04/04→		RUN62D	MAG62D	ETS62ND	ETS60D3N	438320ES
C3 Picasso 1.4		02/09→		RUN62D	MAG62D	ETS62ND	ETS60D3N	438320ES
C3 Picasso 1.6		02/09→		RUN62D	MAG62D	ETS62ND	ETS60D3N	438320ES
C3 Picasso 1.6 HDi		02/09→		RUN62D	MAG62D	ETS62ND	ETS60D3N	438320ES
C3 Picasso 1.6 HDi		02/09→		RUN62D	MAG62D	ETS62ND	ETS60D3N	438320ES
C3 1.1		11/09→		RUN50D	MAG50D	ETS50ND	ETS50D3N-ETS50D4N	
C3 1.4		11/09→		RUN50D	MAG50D	ETS50ND	ETS50D3N-ETS50D4N	
C3 1.4 16V		11/09→		RUN50D	MAG50D	ETS50ND	ETS50D3N-ETS50D4N	
C3 1.6 16V		11/09→		RUN50D	MAG50D	ETS50ND	ETS50D3N-ETS50D4N	
C3 1.4 HDi		11/09→		RUN62D				
C3 1.6 HDi		11/09→		RUN62D				
C3 1.6 HDi		11/09→		RUN62D	MAG62D	ETS62ND	ETS60D3N	438320ES
C3 1.6 HDi		11/09→		RUN62D	MAG62D	ETS62ND	ETS60D3N	438320ES
C4 1.4 16V	(LC_)	11/04→		RUN50D	MAG50D	ETS50ND	ETS50D3N-ETS50D4N	
C4 1.6 16V	(LC_)	11/04→		RUN50D	MAG50D	ETS50ND	ETS50D3N-ETS50D4N	
C4 1.6 16V Bio-Flex	(LC_)	09/07→		RUN62D	MAG62D	ETS62ND	ETS60D3N	438320ES

	Design		START	RUN	MAGIS	ETS	ETS alternative	ES
CITROËN								
C4 1.6 VTi 120	(LC_)	07/08→		RUN62D	MAG62D	ETS62ND	ETS60D3N	438320ES
C4 1.6 THP 140	(LC_)	07/08→		RUN62D	MAG62D	ETS62ND	ETS60D3N	438320ES
C4 1.6 THP 150	(LC_)	07/08→		RUN62D	MAG62D	ETS62ND	ETS60D3N	438320ES
C4 2.0 16V	(LC_)	11/04→		RUN62D	MAG62D	ETS62ND	ETS60D3N	438320ES
C4 2.0 16V	(LC_)	11/04→		RUN62D	MAG62D	ETS62ND	ETS60D3N	438320ES
C4 2.0 16V	(LC_)	11/04→		RUN62D	MAG62D	ETS62ND	ETS60D3N	438320ES
C4 1.6 HDi	(LC_)	11/04→		RUN62D	MAG62D	ETS62ND	ETS60D3N	438320ES
C4 1.6 HDi	(LC_)	11/04→		RUN62D	MAG62D	ETS62ND	ETS60D3N	438320ES
C4 2.0 HDi	(LC_)	11/04→		RUN72D				
C4 2.0 HDi	(LC_)	07/08→		RUN72D				
C4 Coupe 1.4 16V	(LA_)	11/04→		RUN50D				
C4 Coupe 1.6 16V	(LA_)	11/04→		RUN50D	MAG50D	ETS50ND	ETS50D3N-ETS50D4N	
C4 Coupe 1.6 VTi 120	(LA_)	07/08→		RUN62D	MAG62D	ETS62ND	ETS60D3N	438320ES
C4 Coupe 1.6 THP 150	(LA_)	07/08→		RUN62D	MAG62D	ETS62ND	ETS60D3N	438320ES
C4 Coupe 2.0 16V	(LA_)	11/04→		RUN62D	MAG62D	ETS62ND	ETS60D3N	438320ES
C4 Coupe 2.0 16V	(LA_)	11/04→		RUN62D	MAG62D	ETS62ND	ETS60D3N	438320ES
C4 Coupe 1.6 HDi	(LA_)	11/04→		RUN62D	MAG62D	ETS62ND	ETS60D3N	438320ES
C4 Coupe 1.6 HDi	(LA_)	11/04→		RUN62D	MAG62D	ETS62ND	ETS60D3N	438320ES
C4 Coupe 2.0 HDi	(LA_)	11/04→		RUN72D	MAG74D	ETS74ND	ETS70D1N-ETS74DI	476420ES
C4 Coupe 2.0 HDi	(LA_)	07/08→		RUN72D	MAG74D	ETS74ND	ETS70D1N-ETS74DI	476420ES
C4 Picasso 1.6 VTi 120	(UD_)	07/08→		RUN62D	MAG62D	ETS62ND	ETS60D3N	438320ES
C4 Picasso 1.6 THP 140	(UD_)	07/08→		RUN62D	MAG62D	ETS62ND	ETS60D3N	438320ES
C4 Picasso 1.6 16V	(UD_)	07/08→		RUN50D	MAG50D	ETS50ND	ETS50D3N-ETS50D4N	
C4 Picasso 1.8 i 16V	(UD_)	02/07→		RUN62D	MAG62D	ETS62ND	ETS60D3N	438320ES
C4 Picasso 2.0 i 16V	(UD_)	02/07→		RUN62D	MAG62D	ETS62ND	ETS60D3N	438320ES
C4 Picasso 1.6 HDi	(UD_)	02/07→		RUN62D	MAG62D	ETS62ND	ETS60D3N	438320ES
C4 Picasso 2.0 HDi	(UD_)	02/07→		RUN62D				
C4 Picasso 2.0 HDi	(UD_)	07/09→		RUN62D				
C4 Grand Picasso 1.6 16V	(UA_)	07/08→		RUN62D	MAG62D	ETS62ND	ETS60D3N	438320ES
C4 Grand Picasso 1.6 16V	(UA_)	07/08→		RUN62D	MAG62D	ETS62ND	ETS60D3N	438320ES
C4 Grand Picasso 1.6 16V	(UA_)	10/08→		RUN62D	MAG62D	ETS62ND	ETS60D3N	438320ES
C4 Grand Picasso 1.8 i 16V	(UA_)	10/06→		RUN62D	MAG62D	ETS62ND	ETS60D3N	438320ES
C4 Grand Picasso 2.0 i 16V	(UA_)	10/06→		RUN62D	MAG62D	ETS62ND	ETS60D3N	438320ES
C4 Grand Picasso 1.6 HDi	(UA_)	10/06→		RUN62D	MAG62D	ETS62ND	ETS60D3N	438320ES
C4 Grand Picasso 2.0 HDi	(UA_)	10/06→	AGM70D	RUN62D				
C4 Grand Picasso 2.0 HDi	(UA_)	07/09→		RUN62D	MAG62D	ETS62ND	ETS60D3N	438320ES
C5 1.8 16V (DC6FZB, DC6FZE)	(DC_)	03/01→08/04		RUN62D	MAG62D	ETS62ND	ETS60D3N	438320ES
C5 2.0 16V (DCRFNC, DCRFNF)	(DC_)	03/01→08/04		RUN62D	MAG62D	ETS62ND	ETS60D3N	438320ES
C5 2.0 16V HPi (DCRLZB)	(DC_)	03/01→08/04		RUN62D	MAG62D	ETS62ND	ETS60D3N	438320ES
C5 3.0 V6 (DCXFXC, DCXFXF)	(DC_)	03/01→08/04		RUN72D	MAG74D	ETS74ND	ETS70D1N-ETS74DI	476420ES
C5 2.0 HDi (DCRHYB)	(DC_)	03/01→08/04		RUN72D	MAG74D	ETS74ND	ETS70D1N-ETS74DI	476420ES
C5 2.0 HDi	(DC_)	03/01→08/04		RUN72D	MAG74D	ETS74ND	ETS70D1N-ETS74DI	476420ES
C5 2.0 HDi (DCRHZB, DCRHZE)	(DC_)	03/01→08/04		RUN72D	MAG74D	ETS74ND	ETS70D1N-ETS74DI	476420ES
C5 2.2 HDi (DC4HXB, DC4HXE)	(DC_)	03/01→08/04		RUN72D	MAG74D	ETS74ND	ETS70D1N-ETS74DI	476420ES
C5 Break 1.8 16V (DE6FZB, DE6FZE)	(DE_)	06/01→08/04		RUN62D	MAG62D	ETS62ND	ETS60D3N	438320ES
C5 Break 2.0 16V (DERFNF, DERFNC, RERFNC)	(DE_)	06/01→08/04		RUN62D	MAG62D	ETS62ND	ETS60D3N	438320ES

	Design		START	RUN	MAGIS	ETS	ETS alternative	ES
CITROËN								
C5 Break 2.0 16V HPi (DERLZB)	(DE_)	06/01→08/04		RUN62D	MAG62D	ETS62ND	ETS60D3N	438320ES
C5 Break 3.0 V6 (DEXFXC, DEXFXF)	(DE_)	06/01→08/04		RUN72D	MAG74D	ETS74ND	ETS70D1N-ETS74DI	476420ES
C5 Break 3.0 Carlsson	(DE_)	09/03→08/04		RUN72D	MAG74D	ETS74ND	ETS70D1N-ETS74DI	476420ES
C5 Break 2.0 HDi (DERHYB)	(DE_)	06/01→08/04		RUN72D	MAG74D	ETS74ND	ETS70D1N-ETS74DI	476420ES
C5 Break 2.0 HDi (DERHSB, DERHSE)	(DE_)	06/01→08/04		RUN72D	MAG74D	ETS74ND	ETS70D1N-ETS74DI	476420ES
C5 Break 2.0 HDi	(DE_)	06/01→08/04		RUN72D	MAG74D	ETS74ND	ETS70D1N-ETS74DI	476420ES
C5 Break 2.2 HDi (DE4HXB, DE4HXE)	(DE_)	06/01→08/04		RUN72D	MAG74D	ETS74ND	ETS70D1N-ETS74DI	476420ES
C5 1.8 16V (RC6FZB)	(RC_)	09/04→		RUN62D	MAG62D	ETS62ND	ETS60D3N	438320ES
C5 1.8 16V	(RC_)	09/05→		RUN62D	MAG62D	ETS62ND	ETS60D3N	438320ES
C5 2.0 16V (RCRFJB, RCRFJC)	(RC_)	09/04→		RUN62D	MAG62D	ETS62ND	ETS60D3N	438320ES
C5 3.0 V6 (RCXFUF)	(RC_)	09/04→		RUN72D	MAG74D	ETS74ND	ETS70D1N-ETS74DI	476420ES
C5 1.6 HDi (RC8HZB)	(RC_)	09/04→		RUN62D	MAG62D	ETS62ND	ETS60D3N	438320ES
C5 2.0 HDi (RCRHRH)	(RC_)	09/04→		RUN72D	MAG74D	ETS74ND	ETS70D1N-ETS74DI	476420ES
C5 2.2 HDi	(RC_)	04/06→		RUN72D	MAG74D	ETS74ND	ETS70D1N-ETS74DI	476420ES
C5 2.2 HDi (RC4HXE)	(RC_)	09/04→		RUN72D	MAG74D	ETS74ND	ETS70D1N-ETS74DI	476420ES
C5 Break 1.8 16V (RE6FZB)	(RE_)	09/04→		RUN62D	MAG62D	ETS62ND	ETS60D3N	438320ES
C5 Break 1.8 16V	(RE_)	09/05→		RUN62D	MAG62D	ETS62ND	ETS60D3N	438320ES
C5 Break 2.0 16V (RERFJB, RERFJC)	(RE_)	09/04→		RUN62D	MAG62D	ETS62ND	ETS60D3N	438320ES
C5 Break 3.0 V6 (REXFUF)	(RE_)	09/04→		RUN72D	MAG74D	ETS74ND	ETS70D1N-ETS74DI	476420ES
C5 Break 1.6 HDi (RE8HZB)	(RE_)	09/04→		RUN62D	MAG62D	ETS62ND	ETS60D3N	438320ES
C5 Break 2.0 HDi (RERHRH)	(RE_)	09/04→		RUN72D	MAG74D	ETS74ND	ETS70D1N-ETS74DI	476420ES
C5 Break 2.2 HDi	(RE_)	04/06→		RUN72D	MAG74D	ETS74ND	ETS70D1N-ETS74DI	476420ES
C5 Break 2.2 HDi (RE4HXE)	(RE_)	09/04→		RUN72D	MAG74D	ETS74ND	ETS70D1N-ETS74DI	476420ES
C5 1.6 16V	(RD_)	04/09→		RUN62D				
C5 1.8 16V	(RD_)	02/08→		RUN62D	MAG62D	ETS62ND	ETS60D3N	438320ES
C5 2.0 16V	(RD_)	02/08→		RUN62D	MAG62D	ETS62ND	ETS60D3N	438320ES
C5 2.0 16V BioFlex	(RD_)	02/08→		RUN62D	MAG62D	ETS62ND	ETS60D3N	438320ES
C5 3.0	(RD_)	02/08→		RUN72D	MAG74D	ETS74ND	ETS70D1N-ETS74DI	476420ES
C5 3.0 V6	(RD_)	02/08→		RUN72D	MAG74D	ETS74ND	ETS70D1N-ETS74DI	476420ES
C5 1.6 HDi	(RD_)	02/08→		RUN62D	MAG62D	ETS62ND	ETS60D3N	438320ES
C5 2.0 HDi	(RD_)	02/08→		RUN72D	MAG74D	ETS74ND	ETS70D1N-ETS74DI	476420ES
C5 2.0 HDi	(RD_)	04/09→		RUN72D	MAG74D	ETS74ND	ETS70D1N-ETS74DI	476420ES
C5 2.0 HDi	(RD_)	04/09→		RUN72D				
C5 2.2 HDi	(RD_)	02/08→		RUN72D	MAG74D	ETS74ND	ETS70D1N-ETS74DI	476420ES
C5 2.7 HDi	(RD_)	02/08→		RUN72D	MAG74D	ETS74ND	ETS70D1N-ETS74DI	476420ES
C5 3.0 HDi	(RD_)	04/09→		RUN95D		ETS92ND-ETS95D1N		434440ES
C5 Break 1.6 16V	(TD_)	04/09→		RUN62D				
C5 Break 1.8 16V	(TD_)	02/08→		RUN62D	MAG62D	ETS62ND	ETS60D3N	438320ES
C5 Break 2.0 16V	(TD_)	02/08→		RUN62D	MAG62D	ETS62ND	ETS60D3N	438320ES
C5 Break 2.0 16V BioFlex	(TD_)	02/08→		RUN62D	MAG62D	ETS62ND	ETS60D3N	438320ES
C5 Break 3.0	(TD_)	02/08→		RUN72D	MAG74D	ETS74ND	ETS70D1N-ETS74DI	476420ES
C5 Break 3.0 V6	(TD_)	02/08→		RUN72D	MAG74D	ETS74ND	ETS70D1N-ETS74DI	476420ES
C5 Break 1.6 HDi	(TD_)	02/08→		RUN62D	MAG62D	ETS62ND	ETS60D3N	438320ES
C5 Break 2.0 HDi	(TD_)	02/08→		RUN72D	MAG74D	ETS74ND	ETS70D1N-ETS74DI	476420ES
C5 Break 2.0 HDi	(TD_)	04/09→		RUN72D	MAG74D	ETS74ND	ETS70D1N-ETS74DI	476420ES
C5 Break 2.0 HDi	(TD_)	04/09→		RUN72D				
C5 Break 2.2 HDi	(TD_)	02/08→		RUN72D	MAG74D	ETS74ND	ETS70D1N-ETS74DI	476420ES

	Design		START	RUN	MAGIS	ETS	ETS alternative	ES
CITROËN								
C5 Break 2.7 HDi	(TD_)	02/08→		RUN72D	MAG74D	ETS74ND	ETS70D1N-ETS74DI	476420ES
C5 Break 3.0 HDi	(TD_)	04/09→		RUN95D		ETS92ND-ETS95D1N		434440ES
C6 3.0 V6	(TD_)	09/05→	AGM70D	RUN72D	MAG74D	ETS74ND	ETS70D1N-ETS74DI	476420ES
C6 2.2 HDi	(TD_)	06/06→	AGM70D	RUN72D	MAG74D	ETS74ND	ETS70D1N-ETS74DI	476420ES
C6 2.7 HDi	(TD_)	09/05→	AGM70D	RUN72D	MAG74D	ETS74ND	ETS70D1N-ETS74DI	476420ES
C6 3.0 HDi	(TD_)	04/09→		RUN72D				
C8 2.0	(EA_, EB_)	07/02→		RUN72D	MAG74D	ETS74ND	ETS70D1N-ETS74DI	476420ES
C8 2.0 16V	(EA_, EB_)	09/05→		RUN72D	MAG74D	ETS74ND	ETS70D1N-ETS74DI	476420ES
C8 2.2	(EA_, EB_)	07/02→		RUN72D	MAG74D	ETS74ND	ETS70D1N-ETS74DI	476420ES
C8 3.0 V6	(EA_, EB_)	07/02→		RUN72D	MAG74D	ETS74ND	ETS70D1N-ETS74DI	476420ES
C8 2.0 HDi	(EA_, EB_)	07/02→	AGM70D	RUN72D	MAG74D	ETS74ND	ETS70D1N-ETS74DI	476420ES
C8 2.0 HDi	(EA_, EB_)	02/07→		RUN72D	MAG74D	ETS74ND	ETS70D1N-ETS74DI	476420ES
C8 2.0 HDi	(EA_, EB_)	03/06→		RUN72D	MAG74D	ETS74ND	ETS70D1N-ETS74DI	476420ES
C8 2.2 HDi	(EA_, EB_)	07/02→	AGM70D	RUN72D	MAG74D	ETS74ND	ETS70D1N-ETS74DI	476420ES
C8 2.2 HDi	(EA_, EB_)	06/06→		RUN72D	MAG74D	ETS74ND	ETS70D1N-ETS74DI	476420ES
DS3 1.4 16V		04/10→		RUN50D	MAG50D	ETS50ND	ETS50D3N-ETS50D4N	
DS3 1.6 16V		04/10→		RUN50D	MAG50D	ETS50ND	ETS50D3N-ETS50D4N	
DS3 1.6 16V		04/10→		RUN50D	MAG50D	ETS50ND	ETS50D3N-ETS50D4N	
DS3 1.6 HDi		11/09→		RUN62D	MAG62D	ETS62ND	ETS60D3N	438320ES
DS3 1.6 HDi		11/09→		RUN62D	MAG62D	ETS62ND	ETS60D3N	438320ES
EVASION 1.8	(22, U6)	05/97→07/02		RUN62D	MAG62D	ETS62ND	ETS60D3N	438320ES
EVASION 1.8	(22, U6)	02/96→12/96		RUN62D	MAG62D	ETS62ND	ETS60D3N	438320ES
EVASION 2.0	(22, U6)	06/94→07/02		RUN62D	MAG62D	ETS62ND	ETS60D3N	438320ES
EVASION 2.0 16V	(22, U6)	05/98→04/00		RUN62D	MAG62D	ETS62ND	ETS60D3N	438320ES
EVASION 2.0 16V	(22, U6)	05/00→07/02		RUN62D	MAG62D	ETS62ND	ETS60D3N	438320ES
EVASION 2.0 Turbo C.T.	(22, U6)	06/94→07/02		RUN72D	MAG74D	ETS74ND	ETS70D1N-ETS74DI	476420ES
EVASION 1.9 TD	(22, U6)	10/95→12/98		RUN72D	MAG74D	ETS74ND	ETS70D1N-ETS74DI	476420ES
EVASION 1.9 TD	(22, U6)	11/94→07/02		RUN72D	MAG74D	ETS74ND	ETS70D1N-ETS74DI	476420ES
EVASION 2.0 HDI	(22, U6)	08/99→07/02		RUN72D	MAG74D	ETS74ND	ETS70D1N-ETS74DI	476420ES
EVASION 2.0 HDI 16V	(22, U6)	09/99→07/02		RUN72D	MAG74D	ETS74ND	ETS70D1N-ETS74DI	476420ES
EVASION 2.0 TD	(22, U6)	05/97→07/02		RUN72D	MAG74D	ETS74ND	ETS70D1N-ETS74DI	476420ES
EVASION 2.1 TD	(22, U6)	05/96→07/02		RUN72D	MAG74D	ETS74ND	ETS70D1N-ETS74DI	476420ES
JUMPY 1.6	(U6U)	10/95→		RUN62D	MAG62D	ETS62ND	ETS60D3N	438320ES
JUMPY 2.0	(U6U)	04/00→12/06		RUN62D	MAG62D	ETS62ND	ETS60D3N	438320ES
JUMPY 2.0 i 16V	(U6U)	03/00→		RUN62D	MAG62D	ETS62ND	ETS60D3N	438320ES
JUMPY 1.9 D 70	(U6U)	04/98→		RUN72D	MAG74D	ETS74ND	ETS70D1N-ETS74DI	476420ES
JUMPY 1.9 D	(U6U)	10/95→04/98		RUN72D	MAG74D	ETS74ND	ETS70D1N-ETS74DI	476420ES
JUMPY 1.9 TD	(U6U)	10/95→		RUN72D	MAG74D	ETS74ND	ETS70D1N-ETS74DI	476420ES
JUMPY 1.9 TD	(U6U)	04/96→		RUN72D	MAG74D	ETS74ND	ETS70D1N-ETS74DI	476420ES
JUMPY 2.0 HDi 95	(U6U)	10/99→		RUN72D	MAG74D	ETS74ND	ETS70D1N-ETS74DI	476420ES
JUMPY 2.0 HDi 110	(U6U)	03/00→		RUN72D	MAG74D	ETS74ND	ETS70D1N-ETS74DI	476420ES
JUMPY 2.2 HDi	(U6U)	12/03→10/06		RUN72D	MAG74D	ETS74ND	ETS70D1N-ETS74DI	476420ES
JUMPY Box 1.6 i	(BS_, BT_, BY_, BZ_)	10/95→		RUN62D	MAG62D	ETS62ND	ETS60D3N	438320ES
JUMPY Box 2.0 i 16V	(BS_, BT_, BY_, BZ_)	03/00→		RUN62D	MAG62D	ETS62ND	ETS60D3N	438320ES
JUMPY Box 1.9 D 70	(BS_, BT_, BY_, BZ_)	04/98→		RUN72D	MAG74D	ETS74ND	ETS70D1N-ETS74DI	476420ES
JUMPY Box 1.9 TD	(BS_, BT_, BY_, BZ_)	10/95→		RUN72D	MAG74D	ETS74ND	ETS70D1N-ETS74DI	476420ES
JUMPY Box 2.0 HDi 95	(BS_, BT_, BY_, BZ_)	10/99→		RUN72D	MAG74D	ETS74ND	ETS70D1N-ETS74DI	476420ES

	Design		START	RUN	MAGIS	ETS	ETS alternative	ES
CITROËN								
JUMPY Box 2.0 HDi 110	(BS_, BT_, BY_, BZ_)	01/02→		RUN72D	MAG74D	ETS74ND	ETS70D1N-ETS74DI	476420ES
JUMPY Flatbed / Chassis 2.0	(BU_, BV_, BW_, BX_)	12/03→10/06		RUN62D	MAG62D	ETS62ND	ETS60D3N	438320ES
JUMPY Flatbed / Chassis 1.9 TD	(BU_, BV_, BW_, BX_)	10/99→		RUN72D	MAG74D	ETS74ND	ETS70D1N-ETS74DI	476420ES
JUMPY Flatbed / Chassis 2.0 HDi 95	(BU_, BV_, BW_, BX_)	10/99→		RUN72D	MAG74D	ETS74ND	ETS70D1N-ETS74DI	476420ES
JUMPY Flatbed / Chassis 2.0 HDi	(BU_, BV_, BW_, BX_)	12/03→10/06		RUN72D	MAG74D	ETS74ND	ETS70D1N-ETS74DI	476420ES
JUMPY 2.0 i		01/07→		RUN62D	MAG62D	ETS62ND	ETS60D3N	438320ES
JUMPY 1.6 HDi 90		01/07→		RUN62D	MAG62D	ETS62ND	ETS60D3N	438320ES
JUMPY 2.0 HDi 120		01/07→		RUN72D	MAG74D	ETS74ND	ETS70D1N-ETS74DI	476420ES
JUMPY 2.0 HDi 140		01/07→		RUN72D	MAG74D	ETS74ND	ETS70D1N-ETS74DI	476420ES
JUMPY Box 2.0 i		01/07→		RUN62D	MAG62D	ETS62ND	ETS60D3N	438320ES
JUMPY Box 1.6 HDi 90		01/07→		RUN62D	MAG62D	ETS62ND	ETS60D3N	438320ES
JUMPY Box 2.0 HDi 120		01/07→		RUN72D	MAG74D	ETS74ND	ETS70D1N-ETS74DI	476420ES
JUMPY Box 2.0 HDi 140		01/07→		RUN72D	MAG74D	ETS74ND	ETS70D1N-ETS74DI	476420ES
NEMO Estate 1.4		04/09→		RUN50D	MAG50D	ETS50ND	ETS50D3N-ETS50D4N	
NEMO Estate 1.4 HDi		04/09→		RUN62D	MAG62D	ETS62ND	ETS60D3N	438320ES
NEMO Box 1.4	(AA_)	02/08→		RUN50D	MAG50D	ETS50ND	ETS50D3N-ETS50D4N	
NEMO Box 1.4 HDi	(AA_)	02/08→		RUN62D	MAG62D	ETS62ND	ETS60D3N	438320ES
SAXO 1.0 X	(S0, S1)	05/96→11/98		RUN50D	MAG50D-MAG45D	ETS50ND-ETS45ND	ETS50D3N-ETS50D4N	436210ES
SAXO 1.0 X	(S0, S1)	05/98→06/03		RUN50D	MAG50D-MAG45D	ETS50ND-ETS45ND	ETS50D3N-ETS50D4N	436210ES
SAXO 1.1 X,SX	(S0, S1)	05/96→09/03		RUN50D	MAG50D-MAG45D	ETS50ND-ETS45ND	ETS50D3N-ETS50D4N	436210ES
SAXO 1.1 X,SX	(S0, S1)	05/96→09/03		RUN50D	MAG50D-MAG45D	ETS50ND-ETS45ND	ETS50D3N-ETS50D4N	436210ES
SAXO 1.4 VTS	(S0, S1)	05/96→06/03		RUN50D	MAG50D-MAG45D	ETS50ND-ETS45ND	ETS50D3N-ETS50D4N	436210ES
SAXO 1.6 VTL,VTR	(S0, S1)	05/96→06/03		RUN50D	MAG50D-MAG45D	ETS50ND-ETS45ND	ETS50D3N-ETS50D4N	436210ES
SAXO 1.6	(S0, S1)	02/96→06/03		RUN50D	MAG50D	ETS50ND	ETS50D3N-ETS50D4N	
SAXO 1.6 VTS	(S0, S1)	09/00→09/03		RUN50D	MAG50D-MAG45D	ETS50ND-ETS45ND	ETS50D3N-ETS50D4N	436210ES
SAXO 1.6	(S0, S1)	02/01→04/04		RUN50D	MAG50D	ETS50ND	ETS50D3N-ETS50D4N	
SAXO 1.6 VTR	(S0, S1)	05/96→07/99		RUN50D	MAG50D	ETS50ND	ETS50D3N-ETS50D4N	
SAXO 1.6 VTS	(S0, S1)	06/96→09/03		RUN50D	MAG50D-MAG45D	ETS50ND-ETS45ND	ETS50D3N-ETS50D4N	436210ES
SAXO 1.6	(S0, S1)	02/96→04/04		RUN50D	MAG50D	ETS50ND	ETS50D3N-ETS50D4N	
SAXO 1.5 D	(S0, S1)	09/96→09/03		RUN62D	MAG62D	ETS62ND	ETS60D3N	438320ES
SAXO 1.5 D	(S0, S1)	09/96→06/01		RUN62D	MAG62D	ETS62ND	ETS60D3N	438320ES
SAXO 1.5 D	(S0, S1)	07/01→04/04		RUN62D	MAG62D	ETS62ND	ETS60D3N	438320ES
XANTIA 1.6 i	(X1)	03/93→01/98		RUN50D	MAG50D	ETS50ND	ETS50D3N-ETS50D4N	
XANTIA 1.8 i	(X1)	04/97→01/98		RUN62D	MAG62D	ETS62ND	ETS60D3N	438320ES
XANTIA 1.8 i	(X1)	03/93→01/98		RUN62D	MAG62D	ETS62ND	ETS60D3N	438320ES
XANTIA 1.8 i 16V	(X1)	06/95→01/98		RUN62D	MAG62D	ETS62ND	ETS60D3N	438320ES
XANTIA 2.0 i	(X1)	03/93→01/98		RUN62D	MAG62D	ETS62ND	ETS60D3N	438320ES
XANTIA 2.0	(X1)	03/93→05/95		RUN62D	MAG62D	ETS62ND	ETS60D3N	438320ES
XANTIA 2.0 i 16V	(X1)	06/95→01/98		RUN62D	MAG62D	ETS62ND	ETS60D3N	438320ES
XANTIA 2.0 Turbo	(X1)	06/95→01/98		RUN62D	MAG62D	ETS62ND	ETS60D3N	438320ES
XANTIA 2.0 i 16V	(X1)	06/94→01/98		RUN62D	MAG62D	ETS62ND	ETS60D3N	438320ES
XANTIA 2.0 i 16V	(X1)	03/93→01/98		RUN62D	MAG62D	ETS62ND	ETS60D3N	438320ES
XANTIA 3.0 i 24V	(X1)	01/97→01/98		RUN72D	MAG74D	ETS74ND	ETS70D1N-ETS74DI	476420ES
XANTIA 1.9 D	(X1)	06/94→01/98		RUN62D	MAG62D	ETS62ND	ETS60D3N	438320ES
XANTIA 1.9 D	(X1)	06/94→01/98		RUN62D	MAG62D	ETS62ND	ETS60D3N	438320ES
XANTIA 1.9 SD	(X1)	02/96→01/98		RUN62D	MAG62D	ETS62ND	ETS60D3N	438320ES
XANTIA 1.9 Turbo D	(X1)	10/94→01/98		RUN62D	MAG62D	ETS62ND	ETS60D3N	438320ES

	Design		START	RUN	MAGIS	ETS	ETS alternative	ES
CITROËN								
XANTIA 2.1 Turbo D 12V	(X1)	06/95→01/98		RUN72D	MAG74D	ETS74ND	ETS70D1N-ETS74DI	476420ES
XANTIA Break 1.8 i	(X1)	04/97→01/98		RUN62D	MAG62D	ETS62ND	ETS60D3N	438320ES
XANTIA Break 1.8 i	(X1)	06/95→01/98		RUN62D	MAG62D	ETS62ND	ETS60D3N	438320ES
XANTIA Break 1.8 i 16V	(X1)	06/95→01/98		RUN62D	MAG62D	ETS62ND	ETS60D3N	438320ES
XANTIA Break 2.0 i	(X1)	06/95→01/98		RUN62D	MAG62D	ETS62ND	ETS60D3N	438320ES
XANTIA Break 2.0 i 16V	(X1)	06/95→01/98		RUN62D	MAG62D	ETS62ND	ETS60D3N	438320ES
XANTIA Break 2.0 Turbo	(X1)	06/95→01/98		RUN62D	MAG62D	ETS62ND	ETS60D3N	438320ES
XANTIA Break 1.9 SD	(X1)	04/97→01/98		RUN62D	MAG62D	ETS62ND	ETS60D3N	438320ES
XANTIA Break 1.9 Turbo D	(X1)	06/95→01/98		RUN62D	MAG62D	ETS62ND	ETS60D3N	438320ES
XANTIA Break 2.1 Turbo D 12V	(X1)	06/96→01/98		RUN72D	MAG74D	ETS74ND	ETS70D1N-ETS74DI	476420ES
XANTIA 1.8 i	(X2)	01/98→04/03		RUN62D	MAG62D	ETS62ND	ETS60D3N	438320ES
XANTIA 1.8 i 16V	(X2)	01/98→04/03		RUN62D	MAG62D	ETS62ND	ETS60D3N	438320ES
XANTIA 2.0 i	(X2)	01/98→04/03		RUN62D	MAG62D	ETS62ND	ETS60D3N	438320ES
XANTIA 2.0 i 16V	(X2)	01/98→04/03		RUN62D	MAG62D	ETS62ND	ETS60D3N	438320ES
XANTIA 2.0 Turbo	(X2)	01/98→04/03		RUN62D	MAG62D	ETS62ND	ETS60D3N	438320ES
XANTIA 3.0 V6	(X2)	01/98→04/03		RUN72D	MAG74D	ETS74ND	ETS70D1N-ETS74DI	476420ES
XANTIA 1.9 SD	(X2)	01/98→04/03		RUN62D	MAG62D	ETS62ND	ETS60D3N	438320ES
XANTIA 1.9 Turbo D	(X2)	01/98→04/03		RUN62D	MAG62D	ETS62ND	ETS60D3N	438320ES
XANTIA 2.0 HDI 90	(X2)	03/99→04/03		RUN72D	MAG74D	ETS74ND	ETS70D1N-ETS74DI	476420ES
XANTIA 2.0 HDI 109	(X2)	02/99→04/03		RUN72D	MAG74D	ETS74ND	ETS70D1N-ETS74DI	476420ES
XANTIA 2.1 Turbo D 12V	(X2)	01/98→02/99		RUN72D	MAG74D	ETS74ND	ETS70D1N-ETS74DI	476420ES
XANTIA Break 1.8 i	(X2)	01/98→04/03		RUN62D	MAG62D	ETS62ND	ETS60D3N	438320ES
XANTIA Break 1.8 i 16V	(X2)	01/98→04/03		RUN62D	MAG62D	ETS62ND	ETS60D3N	438320ES
XANTIA Break 2.0 i	(X2)	01/98→04/03		RUN62D	MAG62D	ETS62ND	ETS60D3N	438320ES
XANTIA Break 2.0 i 16V	(X2)	01/98→04/03		RUN62D	MAG62D	ETS62ND	ETS60D3N	438320ES
XANTIA Break 2.0 Turbo	(X2)	01/98→04/03		RUN62D	MAG62D	ETS62ND	ETS60D3N	438320ES
XANTIA Break 3.0 V6	(X2)	01/98→04/03		RUN72D	MAG74D	ETS74ND	ETS70D1N-ETS74DI	476420ES
XANTIA Break 1.9 SD	(X2)	01/98→04/03		RUN62D	MAG62D	ETS62ND	ETS60D3N	438320ES
XANTIA Break 1.9 Turbo D	(X2)	01/98→04/03		RUN62D	MAG62D	ETS62ND	ETS60D3N	438320ES
XANTIA Break 2.0 HDI 90	(X2)	03/99→04/03		RUN72D	MAG74D	ETS74ND	ETS70D1N-ETS74DI	476420ES
XANTIA Break 2.0 HDI 109	(X2)	02/99→04/03		RUN72D	MAG74D	ETS74ND	ETS70D1N-ETS74DI	476420ES
XANTIA Break 2.1 Turbo D 12V	(X2)	01/98→02/99		RUN72D	MAG74D	ETS74ND	ETS70D1N-ETS74DI	476420ES
XM 2.0 i Turbo	(Y3)	09/92→06/94		RUN62D	MAG62D	ETS62ND	ETS60D3N	438320ES
XM 3.0 V6 24V	(Y3)	07/90→06/94		RUN72D	MAG74D	ETS74ND	ETS70D1N-ETS74DI	476420ES
XM Break 2.0 i (Y3A)	(Y3)	11/91→04/94		RUN62D	MAG62D	ETS62ND	ETS60D3N	438320ES
XM Break 2.0 i	(Y3)	11/91→04/94		RUN62D	MAG62D	ETS62ND	ETS60D3N	438320ES
XM Break 2.0 Turbo	(Y3)	09/92→04/94		RUN62D	MAG62D	ETS62ND	ETS60D3N	438320ES
XM Break 3.0 V6	(Y3)	11/91→04/94		RUN72D	MAG74D	ETS74ND	ETS70D1N-ETS74DI	476420ES
XM Break 2.1 TD 12V	(Y3)	11/91→04/94		RUN72D	MAG74D	ETS74ND	ETS70D1N-ETS74DI	476420ES
XM Break 2.1 D 12V	(Y3)	11/91→04/94		RUN72D	MAG74D	ETS74ND	ETS70D1N-ETS74DI	476420ES
XM 2.0 i 16V	(Y4)	05/94→10/00		RUN62D	MAG62D	ETS62ND	ETS60D3N	438320ES
XM 2.0 Turbo	(Y4)	05/94→10/00		RUN62D	MAG62D	ETS62ND	ETS60D3N	438320ES
XM 3.0 V6	(Y4)	04/97→10/00		RUN72D	MAG74D	ETS74ND	ETS70D1N-ETS74DI	476420ES
XM 3.0 V6	(Y4)	05/94→10/00		RUN72D	MAG74D	ETS74ND	ETS70D1N-ETS74DI	476420ES
XM 3.0 V6 24V	(Y4)	05/94→10/00		RUN72D	MAG74D	ETS74ND	ETS70D1N-ETS74DI	476420ES
XM 2.1 TD 12V	(Y4)	05/94→10/00		RUN72D	MAG74D	ETS74ND	ETS70D1N-ETS74DI	476420ES
XM 2.5 TD	(Y4)	05/94→10/00		RUN72D	MAG74D	ETS74ND	ETS70D1N-ETS74DI	476420ES

	Design		START	RUN	MAGIS	ETS	ETS alternative	ES
CITROËN								
XM Break 2.0 i 16V	(Y4)	05/94→10/00		RUN62D	MAG62D	ETS62ND	ETS60D3N	438320ES
XM Break 2.0 Turbo	(Y4)	05/94→10/00		RUN62D	MAG62D	ETS62ND	ETS60D3N	438320ES
XM Break 3.0 V6	(Y4)	05/94→10/00		RUN72D	MAG74D	ETS74ND	ETS70D1N-ETS74DI	476420ES
XM Break 3.0 V6	(Y4)	04/97→10/00		RUN72D	MAG74D	ETS74ND	ETS70D1N-ETS74DI	476420ES
XM Break 2.1 D12	(Y4)	07/94→06/96		RUN72D	MAG74D	ETS74ND	ETS70D1N-ETS74DI	476420ES
XM Break 2.1 TD 12V	(Y4)	05/94→10/00		RUN72D	MAG74D	ETS74ND	ETS70D1N-ETS74DI	476420ES
XM Break 2.5 TD	(Y4)	05/94→10/00		RUN72D	MAG74D	ETS74ND	ETS70D1N-ETS74DI	476420ES
XSARA 1.4 i	(N1)	04/97→03/05		RUN50D	MAG50D-MAG45D	ETS50ND-ETS45ND	ETS50D3N-ETS50D4N	436210ES
XSARA 1.6 i	(N1)	04/97→09/00		RUN50D	MAG50D-MAG45D	ETS50ND-ETS45ND	ETS50D3N-ETS50D4N	436210ES
XSARA 1.6 16V	(N1)	09/00→03/05		RUN50D	MAG50D	ETS50ND	ETS50D3N-ETS50D4N	
XSARA 1.8 VTS	(N1)	09/00→10/04		RUN50D				
XSARA 1.8 i	(N1)	04/97→09/00		RUN50D	MAG50D	ETS50ND	ETS50D3N-ETS50D4N	
XSARA 1.8 i Aut.	(N1)	04/97→09/00		RUN50D	MAG50D	ETS50ND	ETS50D3N-ETS50D4N	
XSARA 1.8 i 16V	(N1)	04/97→09/00		RUN50D	MAG50D	ETS50ND	ETS50D3N-ETS50D4N	
XSARA 2.0 16V	(N1)	07/98→09/00		RUN62D	MAG62D	ETS62ND	ETS60D3N	438320ES
XSARA 2.0 16V	(N1)	09/00→03/05		RUN62D	MAG62D	ETS62ND	ETS60D3N	438320ES
XSARA 2.0 16V	(N1)	04/97→09/00		RUN62D	MAG62D	ETS62ND	ETS60D3N	438320ES
XSARA 1.4 HDi	(N1)	01/03→03/05		RUN62D	MAG62D	ETS62ND	ETS60D3N	438320ES
XSARA 1.5 D	(N1)	04/97→09/00		RUN62D	MAG62D	ETS62ND	ETS60D3N	438320ES
XSARA 1.8 D	(N1)	04/97→09/00		RUN62D	MAG62D	ETS62ND	ETS60D3N	438320ES
XSARA 1.8 TD	(N1)	10/97→09/00		RUN62D	MAG62D	ETS62ND	ETS60D3N	438320ES
XSARA 1.9 D	(N1)	07/98→03/05		RUN62D	MAG62D	ETS62ND	ETS60D3N	438320ES
XSARA 1.9 D	(N1)	04/97→09/00		RUN62D	MAG62D	ETS62ND	ETS60D3N	438320ES
XSARA 1.9 SD	(N1)	01/98→09/00		RUN62D	MAG62D	ETS62ND	ETS60D3N	438320ES
XSARA 1.9 TD	(N1)	04/97→09/00		RUN62D	MAG62D	ETS62ND	ETS60D3N	438320ES
XSARA 2.0 HDi 90	(N1)	02/99→03/05		RUN72D				
XSARA 2.0 HDi 109	(N1)	05/01→03/05		RUN72D				
XSARA Break 1.4 i	(N2)	10/97→08/05		RUN50D	MAG50D-MAG45D	ETS50ND-ETS45ND	ETS50D3N-ETS50D4N	436210ES
XSARA Break 1.6 i	(N2)	10/97→09/00		RUN50D	MAG50D-MAG45D	ETS50ND-ETS45ND	ETS50D3N-ETS50D4N	436210ES
XSARA Break 1.6 16V	(N2)	09/00→08/05		RUN50D	MAG50D-MAG45D	ETS50ND-ETS45ND	ETS50D3N-ETS50D4N	436210ES
XSARA Break 1.8 i	(N2)	10/97→09/00		RUN50D	MAG50D	ETS50ND	ETS50D3N-ETS50D4N	
XSARA Break 1.8 i Aut.	(N2)	10/97→09/00		RUN50D	MAG50D	ETS50ND	ETS50D3N-ETS50D4N	
XSARA Break 1.8 i 16V	(N2)	10/97→09/00		RUN50D	MAG50D	ETS50ND	ETS50D3N-ETS50D4N	
XSARA Break 2.0 16V	(N2)	07/98→09/00		RUN62D	MAG62D	ETS62ND	ETS60D3N	438320ES
XSARA Break 2.0 16V	(N2)	09/00→08/05		RUN62D	MAG62D	ETS62ND	ETS60D3N	438320ES
XSARA Break 1.4 HDi	(N2)	01/03→08/05		RUN62D	MAG62D	ETS62ND	ETS60D3N	438320ES
XSARA Break 1.5 D	(N2)	10/97→09/00		RUN62D	MAG62D	ETS62ND	ETS60D3N	438320ES
XSARA Break 1.8 D	(N2)	10/97→09/00		RUN62D	MAG62D	ETS62ND	ETS60D3N	438320ES
XSARA Break 1.9 D	(N2)	07/98→08/05		RUN62D	MAG62D	ETS62ND	ETS60D3N	438320ES
XSARA Break 1.9 D	(N2)	10/97→09/00		RUN62D	MAG62D	ETS62ND	ETS60D3N	438320ES
XSARA Break 1.9 D	(N2)	01/98→09/00		RUN62D	MAG62D	ETS62ND	ETS60D3N	438320ES
XSARA Break 1.9 TD	(N2)	10/97→09/00		RUN62D	MAG62D	ETS62ND	ETS60D3N	438320ES
XSARA Break 2.0 HDI 90	(N2)	02/99→08/05		RUN72D				
XSARA Break 2.0 HDi 109	(N2)	05/01→08/05		RUN72D				
XSARA Coupe 1.4 i	(N0)	03/98→03/05		RUN50D	MAG50D-MAG45D	ETS50ND-ETS45ND	ETS50D3N-ETS50D4N	436210ES
XSARA Coupe 1.6 i	(N0)	02/98→09/00		RUN50D	MAG50D-MAG45D	ETS50ND-ETS45ND	ETS50D3N-ETS50D4N	436210ES
XSARA Coupe 1.6 16V	(N0)	09/00→03/05		RUN50D	MAG50D-MAG45D	ETS50ND-ETS45ND	ETS50D3N-ETS50D4N	436210ES

	Design		START	RUN	MAGIS	ETS	ETS alternative	ES
CITROËN								
XSARA Coupe 1.8 i	(N0)	02/98→09/00		RUN50D				
XSARA Coupe 1.8 i	(N0)	02/98→09/00		RUN50D				
XSARA Coupe 1.8 i 16V	(N0)	02/98→09/00		RUN50D				
XSARA Coupe 2.0 16V	(N0)	09/00→03/05		RUN62D	MAG62D	ETS62ND	ETS60D3N	438320ES
XSARA Coupe 2.0 i 16V	(N0)	02/98→03/05		RUN62D	MAG62D	ETS62ND	ETS60D3N	438320ES
XSARA Coupe 1.4 HDi	(N0)	01/03→03/05		RUN62D	MAG62D	ETS62ND	ETS60D3N	438320ES
XSARA Coupe 1.9 D	(N0)	02/99→03/05		RUN62D	MAG62D	ETS62ND	ETS60D3N	438320ES
XSARA Coupe 1.9 D	(N0)	02/98→09/00		RUN62D	MAG62D	ETS62ND	ETS60D3N	438320ES
XSARA Coupe 1.9 TD	(N0)	02/98→09/00		RUN62D	MAG62D	ETS62ND	ETS60D3N	438320ES
XSARA Coupe 2.0 HDI 90	(N0)	02/99→03/05		RUN72D				
XSARA Coupe 2.0 HDi 109	(N0)	05/01→03/05		RUN72D				
XSARA PICASSO 1.6	(N68)	12/99→		RUN50D	MAG50D	ETS50ND	ETS50D3N-ETS50D4N	
XSARA PICASSO 1.6	(N68)	06/02→		RUN50D				
XSARA PICASSO 1.6	(N68)	12/99→		RUN50D	MAG50D	ETS50ND	ETS50D3N-ETS50D4N	
XSARA PICASSO 1.6 16V	(N68)	09/05→		RUN50D	MAG50D	ETS50ND	ETS50D3N-ETS50D4N	
XSARA PICASSO 1.8 16V	(N68)	02/00→		RUN50D	MAG50D	ETS50ND	ETS50D3N-ETS50D4N	
XSARA PICASSO 2.0 16V	(N68)	01/03→		RUN62D	MAG62D	ETS62ND	ETS60D3N	438320ES
XSARA PICASSO 1.6 HDi	(N68)	09/05→		RUN62D	MAG62D	ETS62ND	ETS60D3N	438320ES
XSARA PICASSO 1.6 HDi	(N68)	05/04→		RUN62D	MAG62D	ETS62ND	ETS60D3N	438320ES
XSARA PICASSO 2.0 HDi	(N68)	12/99→	AGM70D	RUN72D	MAG74D	ETS74ND	ETS70D1N-ETS74DI	476420ES
ZX 1,1	(N2)	03/91→08/93		RUN50D	MAG50D-MAG45D	ETS50ND-ETS45ND	ETS50D3N-ETS50D4N	436210ES
ZX 1.1	(N2)	03/91→06/97		RUN50D	MAG50D-MAG45D	ETS50ND-ETS45ND	ETS50D3N-ETS50D4N	436210ES
ZX 1.4	(N2)	03/91→06/97		RUN50D	MAG50D-MAG45D	ETS50ND-ETS45ND	ETS50D3N-ETS50D4N	436210ES
ZX 1.4 i	(N2)	03/91→06/97		RUN50D	MAG50D-MAG45D	ETS50ND-ETS45ND	ETS50D3N-ETS50D4N	436210ES
ZX 1.6 i	(N2)	03/91→06/97		RUN50D	MAG50D	ETS50ND	ETS50D3N-ETS50D4N	
ZX 1.6	(N2)	07/94→10/97		RUN62D	MAG62D	ETS62ND	ETS60D3N	438320ES
ZX 1.8 i	(N2)	07/92→06/97		RUN50D	MAG50D	ETS50ND	ETS50D3N-ETS50D4N	
ZX 1.8	(N2)	07/94→10/97		RUN62D	MAG62D	ETS62ND	ETS60D3N	438320ES
ZX 1.8 i 16V	(N2)	01/96→06/97		RUN50D	MAG50D-MAG45D	ETS50ND-ETS45ND	ETS50D3N-ETS50D4N	436210ES
ZX 1.8	(N2)	04/96→10/97		RUN62D	MAG62D	ETS62ND	ETS60D3N	438320ES
ZX 1.9 i	(N2)	03/91→06/97		RUN50D	MAG50D-MAG45D	ETS50ND-ETS45ND	ETS50D3N-ETS50D4N	436210ES
ZX 1.9	(N2)	03/91→06/97		RUN62D	MAG62D	ETS62ND	ETS60D3N	438320ES
ZX 1.9	(N2)	03/91→09/93		RUN62D	MAG62D	ETS62ND	ETS60D3N	438320ES
ZX 2.0 i	(N2)	07/92→06/97		RUN62D	MAG62D	ETS62ND	ETS60D3N	438320ES
ZX 2.0	(N2)	07/94→10/97		RUN62D	MAG62D	ETS62ND	ETS60D3N	438320ES
ZX 2.0 i 16V	(N2)	06/94→06/97		RUN62D	MAG62D	ETS62ND	ETS60D3N	438320ES
ZX 2.0 i 16V	(N2)	07/92→10/94		RUN62D	MAG62D	ETS62ND	ETS60D3N	438320ES
ZX 2.0 i 16V	(N2)	05/96→06/97		RUN62D	MAG62D	ETS62ND	ETS60D3N	438320ES
ZX 2.0	(N2)	09/96→10/97		RUN62D	MAG62D	ETS62ND	ETS60D3N	438320ES
ZX 1.4 D	(N2)	07/94→10/97		RUN62D	MAG62D	ETS62ND	ETS60D3N	438320ES
ZX 1.8 D	(N2)	06/93→06/97		RUN62D	MAG62D	ETS62ND	ETS60D3N	438320ES
ZX 1.9 D	(N2)	03/91→06/97		RUN62D	MAG62D	ETS62ND	ETS60D3N	438320ES
ZX 1.9 D	(N2)	06/94→06/97		RUN62D	MAG62D	ETS62ND	ETS60D3N	438320ES
ZX 1.9 DT	(N2)	07/94→10/97		RUN62D	MAG62D	ETS62ND	ETS60D3N	438320ES
ZX 1.9 TD	(N2)	07/92→06/97		RUN62D	MAG62D	ETS62ND	ETS60D3N	438320ES
ZX 1.9 DT	(N2)	06/92→06/94		RUN62D	MAG62D	ETS62ND	ETS60D3N	438320ES
ZX Break 1.4 i	(N2)	10/93→10/97		RUN50D	MAG50D-MAG45D	ETS50ND-ETS45ND	ETS50D3N-ETS50D4N	436210ES

	Design		START	RUN	MAGIS	ETS	ETS alternative	ES
CITROËN								
ZX Break 1.6 i	(N2)	10/93→10/97		RUN50D	MAG50D	ETS50ND	ETS50D3N-ETS50D4N	
ZX Break 1.8 i	(N2)	10/93→10/97		RUN50D	MAG50D	ETS50ND	ETS50D3N-ETS50D4N	
ZX Break 1.8 i 16V	(N2)	01/96→02/98		RUN50D	MAG50D	ETS50ND	ETS50D3N-ETS50D4N	
ZX Break 1.8 D	(N2)	10/93→10/97		RUN62D	MAG62D	ETS62ND	ETS60D3N	438320ES
ZX Break 1.9 D	(N2)	10/93→10/97		RUN62D	MAG62D	ETS62ND	ETS60D3N	438320ES
ZX Break 1.9 D	(N2)	06/94→10/97		RUN62D	MAG62D	ETS62ND	ETS60D3N	438320ES
ZX Break 1.9 TD	(N2)	10/93→10/97		RUN62D	MAG62D	ETS62ND	ETS60D3N	438320ES
C25 Bus 2.0	(280_, 290_)	02/91→02/94		RUN62D	MAG62D	ETS62ND	ETS60D3N	438320ES
C25 Bus 1.9 TD	(280_, 290_)	04/92→02/94		RUN95D		ETS92ND-ETS95D1N		434440ES
C25 Box 2.0	(280_, 290_)	02/91→03/94		RUN62D	MAG62D	ETS62ND	ETS60D3N	438320ES
C25 Box 2.0 4x4	(280_, 290_)	01/90→01/94		RUN62D	MAG62D	ETS62ND	ETS60D3N	438320ES
C25 Box 1.9 DT	(280_, 290_)	10/91→01/94		RUN72D	MAG74D	ETS74ND	ETS70D1N-ETS74DI	476420ES
JUMPER Bus 2.0	(230P)	02/94→04/02		RUN62D	MAG62D	ETS62ND	ETS60D3N	438320ES
JUMPER Bus 2.0 4x4	(230P)	08/96→04/02		RUN62D	MAG62D	ETS62ND	ETS60D3N	438320ES
JUMPER Bus 1.9 D	(230P)	01/99→04/02		RUN72D	MAG74D	ETS74ND	ETS70D1N-ETS74DI	476420ES
JUMPER Bus 1.9 TD	(230P)	08/94→04/02		RUN72D	MAG74D	ETS74ND	ETS70D1N-ETS74DI	476420ES
JUMPER Bus 1.9 TD	(230P)	02/94→04/02		RUN72D	MAG74D	ETS74ND	ETS70D1N-ETS74DI	476420ES
JUMPER Bus 1.9 TD 4x4	(230P)	08/96→04/02		RUN72D	MAG74D	ETS74ND	ETS70D1N-ETS74DI	476420ES
JUMPER Bus 2.5 D	(230P)	08/94→04/02		RUN95D		ETS92ND-ETS95D1N		434440ES
JUMPER Bus 2.5 D 4x4	(230P)	08/96→04/02		RUN95D		ETS92ND-ETS95D1N		434440ES
JUMPER Bus 2.5 TD	(230P)	08/94→04/02		RUN95D		ETS92ND-ETS95D1N		434440ES
JUMPER Bus 2.5 TD 4x4	(230P)	08/96→04/02		RUN95D		ETS92ND-ETS95D1N		434440ES
JUMPER Bus 2.5 TDi	(230P)	12/96→11/00		RUN95D		ETS92ND-ETS95D1N		434440ES
JUMPER Bus 2.5 TDI 4x4	(230P)	12/96→11/00		RUN95D		ETS92ND-ETS95D1N		434440ES
JUMPER Bus 2.8 HDi	(230P)	09/00→04/02		RUN95D		ETS92ND-ETS95D1N		434440ES
JUMPER Bus 2.8 HDi 4x4	(230P)	09/00→04/02		RUN95D		ETS92ND-ETS95D1N		434440ES
JUMPER Box 2.0	(230L)	03/94→04/02		RUN62D	MAG62D	ETS62ND	ETS60D3N	438320ES
JUMPER Box 1.9 D	(230L)	07/99→04/02		RUN72D	MAG74D	ETS74ND	ETS70D1N-ETS74DI	476420ES
JUMPER Box 1.9 D	(230L)	02/94→04/02		RUN72D	MAG74D	ETS74ND	ETS70D1N-ETS74DI	476420ES
JUMPER Box 1.9 TD	(230L)	03/94→04/02		RUN72D	MAG74D	ETS74ND	ETS70D1N-ETS74DI	476420ES
JUMPER Box 1.9 TD	(230L)	03/94→04/02		RUN72D	MAG74D	ETS74ND	ETS70D1N-ETS74DI	476420ES
JUMPER Box 2.0 HDI	(230L)	11/01→04/02		RUN72D	MAG74D	ETS74ND	ETS70D1N-ETS74DI	476420ES
JUMPER Box 2.5 D	(230L)	03/94→04/02		RUN95D		ETS92ND-ETS95D1N		434440ES
JUMPER Box 2.5 D 4x4	(230L)	03/00→04/02		RUN95D		ETS92ND-ETS95D1N		434440ES
JUMPER Box 2.5 TD	(230L)	03/94→04/02		RUN95D		ETS92ND-ETS95D1N		434440ES
JUMPER Box 2.5 DT 4x4	(230L)	10/96→08/97		RUN95D		ETS92ND-ETS95D1N		434440ES
JUMPER Box 2.5 TDi	(230L)	12/96→11/00		RUN95D		ETS92ND-ETS95D1N		434440ES
JUMPER Box 2.5 TDi 4x4	(230L)	03/00→11/00		RUN95D		ETS92ND-ETS95D1N		434440ES
JUMPER Box 2.8 HDi	(230L)	09/00→04/02		RUN95D		ETS92ND-ETS95D1N		434440ES
JUMPER Box 2.8 HDi 4x4	(230L)	09/00→04/02		RUN95D		ETS92ND-ETS95D1N		434440ES
JUMPER Flatbed / Chassis 2.0	(230)	03/94→04/02		RUN72D	MAG74D	ETS74ND	ETS70D1N-ETS74DI	476420ES
JUMPER Flatbed / Chassis 1.9 TD	(230)	03/94→04/02		RUN72D	MAG74D	ETS74ND	ETS70D1N-ETS74DI	476420ES
JUMPER Flatbed / Chassis 1.9 TD	(230)	03/94→04/02		RUN72D	MAG74D	ETS74ND	ETS70D1N-ETS74DI	476420ES
JUMPER Flatbed / Chassis 2.5 D	(230)	03/94→04/02		RUN95D		ETS92ND-ETS95D1N		434440ES
JUMPER Flatbed / Chassis 2.5 D 4X4	(230)	03/00→04/02		RUN95D		ETS92ND-ETS95D1N		434440ES
JUMPER Flatbed / Chassis 2.5 TD	(230)	03/94→04/02		RUN95D		ETS92ND-ETS95D1N		434440ES
JUMPER Flatbed / Chassis 2.5 TDi	(230)	12/96→04/02		RUN95D		ETS92ND-ETS95D1N		434440ES

	Design		START	RUN	MAGIS	ETS	ETS alternative	ES
CITROËN								
JUMPER Flatbed / Chassis 2.5 TDi 4X4	(230)	03/00→04/02		RUN95D		ETS92ND-ETS95D1N		434440ES
JUMPER Flatbed / Chassis 2.8 HDi	(230)	10/00→01/02		RUN95D		ETS92ND-ETS95D1N		434440ES
JUMPER Flatbed / Chassis 2.8 HDi	(230)	09/00→04/02		RUN95D		ETS92ND-ETS95D1N		434440ES
JUMPER Bus 2.0	(244, Z_)	04/02→		RUN62D	MAG62D	ETS62ND	ETS60D3N	438320ES
JUMPER Bus 2.0 bivalent	(244, Z_)	02/03→		RUN62D	MAG62D	ETS62ND	ETS60D3N	438320ES
JUMPER Bus 2.0 HDi	(244, Z_)	04/02→		RUN72D	MAG74D	ETS74ND	ETS70D1N-ETS74DI	476420ES
JUMPER Bus 2.2 HDi	(244, Z_)	04/02→		RUN72D	MAG74D	ETS74ND	ETS70D1N-ETS74DI	476420ES
JUMPER Bus 2.8 HDi	(244, Z_)	04/02→		RUN95D		ETS92ND-ETS95D1N		434440ES
JUMPER Box 2.0	(244)	04/02→		RUN62D	MAG62D	ETS62ND	ETS60D3N	438320ES
JUMPER Box 2.0 bivalent	(244)	02/03→		RUN62D	MAG62D	ETS62ND	ETS60D3N	438320ES
JUMPER Box 2.0 HDi	(244)	04/02→		RUN72D	MAG74D	ETS74ND	ETS70D1N-ETS74DI	476420ES
JUMPER Box 2.2 HDi	(244)	04/02→		RUN72D	MAG74D	ETS74ND	ETS70D1N-ETS74DI	476420ES
JUMPER Box 2.8 HDi	(244)	04/02→		RUN95D		ETS92ND-ETS95D1N		434440ES
JUMPER Box 2.8 HDi 4x4	(244)	04/02→		RUN95D		ETS92ND-ETS95D1N		434440ES
JUMPER Box 2.8 HDi	(244)	05/04→		RUN95D		ETS92ND-ETS95D1N		434440ES
JUMPER Flatbed / Chassis 2.0 HDi	(244)	04/02→		RUN72D	MAG74D	ETS74ND	ETS70D1N-ETS74DI	476420ES
JUMPER Flatbed / Chassis 2.2 HDi 16V	(244)	04/02→		RUN72D	MAG74D	ETS74ND	ETS70D1N-ETS74DI	476420ES
JUMPER Flatbed / Chassis 2.2 HDi	(244)	02/02→06/06		RUN72D	MAG74D	ETS74ND	ETS70D1N-ETS74DI	476420ES
JUMPER Flatbed / Chassis 2.8 HDi	(244)	04/02→		RUN95D		ETS92ND-ETS95D1N		434440ES
JUMPER Flatbed / Chassis 2.8 HDi	(244)	05/04→		RUN95D		ETS92ND-ETS95D1N		434440ES
JUMPER Flatbed / Chassis 2.8 HDi 4x4	(244)	02/02→06/06		RUN95D		ETS92ND-ETS95D1N		434440ES
JUMPER Bus 2.2 HDi 100		04/06→		RUN95D				
JUMPER Bus 2.2 HDi 120		04/06→		RUN95D				
JUMPER Bus 3.0 HDi 160		09/06→				ETS110D1N		
JUMPER Box 2.2 HDi 100		04/06→		RUN95D				
JUMPER Box 2.2 HDi 120		04/06→		RUN95D				
JUMPER Box 3.0 HDi 160		09/06→				ETS110D1N		
JUMPER Flatbed / Chassis 2.2 HDi 100		04/06→		RUN95D				
JUMPER Flatbed / Chassis 2.2 HDi 120		04/06→		RUN95D				
JUMPER Flatbed / Chassis 3.0 HDi 160		09/06→				ETS110D1N		
DACIA								
1304 Flatbed / Chassis 1.3		09/90→04/04		RUN50D	MAG50D-MAG45D	ETS50ND-ETS45ND	ETS50D3N-ETS50D4N	436210ES
1309 Flatbed / Chassis 1.6		12/94→08/01		RUN50D	MAG50D-MAG45D	ETS50ND-ETS45ND	ETS50D3N-ETS50D4N	436210ES
1310 Saloon 1.4 Classic	(U, X)	01/95→		RUN50D	MAG50D-MAG45D	ETS50ND-ETS45ND	ETS50D3N-ETS50D4N	436210ES
1310 Saloon 1.5	(U, X)	01/95→		RUN50D	MAG50D-MAG45D	ETS50ND-ETS45ND	ETS50D3N-ETS50D4N	436210ES
1310 Saloon 1.9 D	(U, X)	02/05→		RUN62D	MAG62D	ETS62ND	ETS60D3N	438320ES
1310 Estate 1.4		01/95→		RUN50D	MAG50D-MAG45D	ETS50ND-ETS45ND	ETS50D3N-ETS50D4N	436210ES
1310 Estate 1.5		01/95→		RUN50D	MAG50D-MAG45D	ETS50ND-ETS45ND	ETS50D3N-ETS50D4N	436210ES
1410 Estate 1.4		06/94→12/98		RUN50D	MAG50D-MAG45D	ETS50ND-ETS45ND	ETS50D3N-ETS50D4N	436210ES
LOGAN 1.4 (LSOA, LSOC, LSOE, LSOG)		09/04→		RUN50D	MAG50D-MAG45D	ETS50ND-ETS45ND	ETS50D3N-ETS50D4N	436210ES
LOGAN 1.6 (LSOB, LSOD, LSOF, LSOH)		09/04→		RUN50D				
LOGAN 1.6 16V (LS0M)		02/06→		RUN50D				
LOGAN 1.5 dCi (LS0J)		09/05→			MAG62DB	ETS60NDB-ETS50NDB		ES60NDB
LOGAN 1.5 dCi (LS0K)		01/06→			MAG62DB	ETS60NDB-ETS50NDB		ES60NDB
LOGAN 1.5 dCi		09/07→			MAG62DB	ETS60NDB-ETS50NDB		ES60NDB
LOGAN MCV 1.4		02/07→		RUN50D				

	Design		START	RUN	MAGIS	ETS	ETS alternative	ES
DACIA								
LOGAN MCV 1.6		02/07→		RUN50D				
LOGAN MCV 1.6 16V		02/07→		RUN50D				
LOGAN MCV 1.5 dCi		02/07→			MAG62DB	ETS60NDB-ETS50NDB		ES60NDB
LOGAN MCV 1.5 dCi		09/07→			MAG62DB	ETS60NDB-ETS50NDB		ES60NDB
LOGAN EXPRESS 1.4		03/09→		RUN50D				
LOGAN EXPRESS 1.6		03/09→		RUN50D				
LOGAN EXPRESS 1.5 dCi		03/09→			MAG62DB	ETS60NDB-ETS50NDB		ES60NDB
LOGAN EXPRESS 1.5 dCi		03/09→			MAG62DB	ETS60NDB-ETS50NDB		ES60NDB
LOGAN Pickup 1.6		03/08→		RUN50D				
LOGAN Pickup 1.5 dCi		03/08→			MAG62DB	ETS60NDB-ETS50NDB		ES60NDB
LOGAN Pickup 1.5 dCi		03/08→			MAG62DB	ETS60NDB-ETS50NDB		ES60NDB
NOVA 1.4		04/96→03/01		RUN50D				
SANDERO 1.2 16V		11/08→		RUN50D	MAG50D-MAG45D	ETS50ND-ETS45ND	ETS50D3N-ETS50D4N	436210ES
SANDERO 1.4		06/08→		RUN50D				
SANDERO 1.6		06/08→		RUN50D				
SANDERO 1.5 dCi		11/08→		RUN62D	MAG62D	ETS62ND	ETS60D3N	438320ES
SANDERO 1.5 dCi		11/08→		RUN62D	MAG62D	ETS62ND	ETS60D3N	438320ES
SOLENZA 1.4		02/03→		RUN50D	MAG50D-MAG45D	ETS50ND-ETS45ND	ETS50D3N-ETS50D4N	436210ES
SOLENZA 1.9 D		02/03→		RUN62D	MAG62D	ETS62ND	ETS60D3N	438320ES
SUPERNOVA 1.4		04/00→03/03		RUN50D	MAG50D-MAG45D	ETS50ND-ETS45ND	ETS50D3N-ETS50D4N	436210ES
DAEWOO								
CIELO 1.5		06/94→07/98		RUN62D	MAG62D	ETS62ND	ETS60D3N	438320ES
ESPERO 1.5	(KLEJ)	10/97→09/99		RUN62D	MAG62D	ETS62ND	ETS60D3N	438320ES
ESPERO 1.5 16V	(KLEJ)	10/93→09/94		RUN62D	MAG62D	ETS62ND	ETS60D3N	438320ES
ESPERO 1.5 16V	(KLEJ)	02/95→06/99		RUN62D	MAG62D	ETS62ND	ETS60D3N	438320ES
ESPERO 1.8	(KLEJ)	02/95→09/99		RUN62D	MAG62D	ETS62ND	ETS60D3N	438320ES
ESPERO 1.8	(KLEJ)	02/95→06/99		RUN62D	MAG62D	ETS62ND	ETS60D3N	438320ES
ESPERO 2.0	(KLEJ)	10/91→09/93		RUN62D	MAG62D	ETS62ND	ETS60D3N	438320ES
ESPERO 2.0	(KLEJ)	02/95→06/99		RUN62D	MAG62D	ETS62ND	ETS60D3N	438320ES
ESPERO 2.0	(KLEJ)	10/93→09/94		RUN62D	MAG62D	ETS62ND	ETS60D3N	438320ES
KALOS 1.5	(KLAS)	11/02→12/04				ETS55NS		
KALOS Saloon 1.4	(KLAS)	11/02→12/04				ETS55NS		
KALOS Saloon 1.4	(KLAS)	05/03→12/04				ETS55NS		
KALOS Saloon 1.5	(KLAS)	11/02→12/04				ETS55NS		
LACETTI Hatchback 1.4	(KLAN)	02/04→				ETS55NS		
LACETTI Hatchback 1.6	(KLAN)	02/04→				ETS55NS		
LACETTI Hatchback 1.8	(KLAN)	02/04→				ETS55NS		
LANOS 1.4	(KLAT)	05/97→				ETS55NS		
LANOS 1.5	(KLAT)	05/97→				ETS55NS		
LANOS 1.6 16V	(KLAT)	05/97→				ETS55NS		
LANOS Saloon 1.4	(KLAT)	05/97→				ETS55NS		
LANOS Saloon 1.5	(KLAT)	05/97→				ETS55NS		
LANOS Saloon 1.6 16V	(KLAT)	05/97→				ETS55NS		
LEGANZA 2.0 16V	(KLAV)	07/00→				ETS55NS		
LEGANZA 2.0 16V	(KLAV)	06/97→12/02				ETS55NS		
LEGANZA 2.0	(KLAV)	01/01→12/02				ETS55NS		

	Design		START	RUN	MAGIS	ETS	ETS alternative	ES
DAEWOO								
LEGANZA 2.2 16V	(KLAV)	04/99→12/02				ETS55NS		
MATIZ 0.8	(KLYA)	09/98→						ES35240DJ
MATIZ 1.0	(KLYA)	01/03→						ES35240DJ
NEXIA 1.5	(KLETN)	08/96→08/97		RUN62D	MAG62D	ETS62ND	ETS60D3N	438320ES
NEXIA 1.5	(KLETN)	02/95→08/97		RUN62D	MAG62D	ETS62ND	ETS60D3N	438320ES
NEXIA 1.5	(KLETN)	02/95→08/97		RUN62D	MAG62D	ETS62ND	ETS60D3N	438320ES
NEXIA 1.5 16V	(KLETN)	02/95→08/97		RUN62D	MAG62D	ETS62ND	ETS60D3N	438320ES
NEXIA Saloon 1.5	(KLETN)	08/96→08/97		RUN62D	MAG62D	ETS62ND	ETS60D3N	438320ES
NEXIA Saloon 1.5	(KLETN)	02/95→08/97		RUN62D	MAG62D	ETS62ND	ETS60D3N	438320ES
NEXIA Saloon 1.5	(KLETN)	02/95→08/97		RUN62D	MAG62D	ETS62ND	ETS60D3N	438320ES
NEXIA Saloon 1.5 16V	(KLETN)	02/95→08/97		RUN62D	MAG62D	ETS62ND	ETS60D3N	438320ES
NUBIRA 1.6	(KLAJ)	08/02→07/03				ETS55NS		
NUBIRA 1.6 16V	(KLAJ)	05/97→				ETS55NS		
NUBIRA 1.8	(KLAJ)	04/97→05/99				ETS55NS		
NUBIRA 2.0 CDX	(KLAJ)	08/02→07/03				ETS55NS		
NUBIRA 2.0 16V	(KLAJ)	05/97→				ETS55NS		
NUBIRA Saloon 1.5 SE	(KLAJ)	06/99→07/03				ETS55NS		
NUBIRA Saloon 1.6 16V	(KLAJ)	07/00→				ETS55NS		
NUBIRA Saloon 1.6 16V	(KLAJ)	05/97→				ETS55NS		
NUBIRA Saloon 1.8	(KLAJ)	04/97→05/99				ETS55NS		
NUBIRA Saloon 2.0 16V	(KLAJ)	12/00→				ETS55NS		
NUBIRA Saloon 2.0	(KLAJ)	06/99→07/03				ETS55NS		
NUBIRA Saloon 2.0 16V	(KLAJ)	05/97→				ETS55NS		
NUBIRA Wagon 1.6 16V	(KLAJ)	06/97→				ETS55NS		
NUBIRA Wagon 1.6 16V	(KLAJ)	12/00→				ETS55NS		
NUBIRA Wagon 1.6 16V	(KLAJ)	05/97→				ETS55NS		
NUBIRA Wagon 1.8	(KLAJ)	04/97→05/99				ETS55NS		
NUBIRA Wagon 2.0 16V	(KLAJ)	12/00→				ETS55NS		
NUBIRA Wagon 2.0 16V	(KLAJ)	05/97→				ETS55NS		
NUBIRA Saloon 1.4	(KLAN)	10/03→12/04				ETS55NS		
NUBIRA Saloon 1.6	(KLAN)	07/03→				ETS55NS		
NUBIRA Saloon 1.8	(KLAN)	07/03→				ETS55NS		
NUBIRA Wagon 1.6	(KLAN)	07/03→				ETS55NS		
NUBIRA Wagon 1.8	(KLAN)	06/04→				ETS55NS		
NUBIRA Wagon 1.8	(KLAN)	07/03→				ETS55NS		
REZZO 1.6	(KLAU)	09/00→				ETS55NS		
REZZO 1.8	(KLAU)	09/00→				ETS55NS		
REZZO 1.8	(KLAU)	09/00→				ETS55NS		
REZZO 1.8	(KLAU)	09/00→				ETS55NS		
REZZO 1.8	(KLAU)	09/00→				ETS55NS		
REZZO 2.0	(KLAU)	09/01→				ETS55NS		
REZZO 2.0	(KLAU)	09/00→				ETS55NS		
TICO 0.8	(KLY3)	02/95→12/00						ES35240DJ
TICO 0.8	(KLY3)	01/96→12/00						ES35240DJ

	Design		START	RUN	MAGIS	ETS	ETS alternative	ES
DAIHATSU								
APPLAUSE II 1.6 16V (A101)	(A101)	07/97→05/00						ES45300DJ
CHARADE III 1.0 (G100)	(G100, G101, G102)	11/90→12/92						ES45300DJ
CHARADE III Saloon 1.3	(G102)	11/90→02/93						ES45300DJ
CHARADE IV 1.0	(G200, G202)	09/94→03/96						ES45300DJ
CHARADE IV 1.0	(G200, G202)	03/93→03/96						ES45300DJ
CHARADE IV 1.3	(G200, G202)	09/96→11/99						ES45300DJ
CHARADE IV 1.3 16V	(G200, G202)	05/96→11/99						ES45300DJ
CHARADE IV 1.3	(G200, G202)	12/99→06/00						ES45300DJ
CHARADE IV 1.3 i 16V	(G200, G202)	01/93→11/99						ES45300DJ
CHARADE IV 1.5 HG	(G200, G202)	06/94→03/96						ES45300DJ
CHARADE IV 1.5 i 16V	(G200, G202)	01/97→11/99						ES45300DJ
CHARADE IV 1.6 GTi	(G200, G202)	03/93→11/99						ES45300DJ
CHARADE IV Saloon 1.0	(G203)	10/99→10/02						ES45300DJ
CHARADE IV Saloon 1.3	(G203)	04/98→11/99						ES45300DJ
CHARADE IV Saloon 1.5	(G203)	10/94→						ES45300DJ
CHARADE IV Saloon 1.5 i 16V	(G203)	08/94→						ES45300DJ
CHARADE 1.0 (L251S)	(L2_)	03/03→						ES45300DJ
COPEN 0.7		09/03→						ES45300DJ
COPEN 1.3		03/06→						ES45300DJ
CUORE III 0.8	(L201)	10/90→12/94						ES35240DJ
CUORE IV 0.8	(L501)	01/95→11/96						ES35240DJ
CUORE V 0.8	(L5)	11/96→10/98						ES35240DJ
CUORE VI 1.0 i (L701)	(L7_)	10/98→05/03						ES35240DJ
CUORE VII 0.7	(L251)	03/03→						ES35240DJ
CUORE VII 0.7	(L251)	03/03→						ES35240DJ
CUORE VII 0.7	(L251)	03/03→						ES35240DJ
CUORE VII 0.7 All-wheel Drive	(L251)	03/03→						ES35240DJ
CUORE VII 0.7 Turbo Avy All-wheel Drive	(L251)	03/03→						ES35240DJ
CUORE VII 1.0	(L251)	05/03→						ES35240DJ
CUORE VIII 1.0		04/07→						ES35240DJ
EXTOL Bus 1.3	(S22_, S23_)	07/00→						ES45300DJ
GRAN MOVE 1.5 16V (G303)	(G3)	10/96→07/98						ES45300DJ
GRAN MOVE 1.5 GLX	(G3)	10/96→08/98						ES45300DJ
GRAN MOVE 1.6 GX	(G3)	06/98→07/02						ES45300DJ
GRAN MOVE 1.6	(G3)	07/98→07/02						ES45300DJ
GRAN MOVE 1.6 GLX	(G3)	06/98→07/02						ES45300DJ
GRAN MOVE 1.6 16V (G301)	(G3)	05/98→						ES45300DJ
HIJET II Bus 1.0 i	(S85)	07/94→05/98						ES35240DJ
HIJET II Box 1.0	(S85)	12/92→05/98						ES35240DJ
HIJET II Box 1.0 i	(S85)	07/94→05/98						ES35240DJ
HIJET II Box 1.3 i 16V	(S85)	05/98→						ES35240DJ
HIJET II Box 1.2 D	(S85)	05/95→03/98		RUN62D	MAG62D	ETS62ND	ETS60D3N	438320ES
HIJET II Box 1.4 D	(S85)	03/98→		RUN62D	MAG62D	ETS62ND	ETS60D3N	438320ES
MATERIA 1.0	(M4_)	10/06→						ES35240DJ
MATERIA 1.0 DVVT	(M4_)	10/06→						ES35240DJ
MATERIA 1.3	(M4_)	10/06→						ES45300DJ
MATERIA 1.3 DVVT Turbo	(M4_)	10/06→						ES45300DJ

	Design		START	RUN	MAGIS	ETS	ETS alternative	ES
DAIHATSU								
MATERIA 1.5	(M4_)	10/06→						ES45300DJ
MATERIA 1.5 ECO 4WD	(M4_)	10/06→						ES45300DJ
MOVE 0.8	(L6, L9)	10/96→						ES35240DJ
MOVE 1.0 i	(L6, L9)	10/98→						ES35240DJ
ROCKY 2.2 SE, SX		07-84→04-93						ES100720S
SIRION 1.0 i (M100)	(M1)	04/98→09/00						ES45300DJ
SIRION 1.0 i 4WD	(M1)	04/99→09/00						ES45300DJ
SIRION 1.0 i	(M1)	09/00→01/05						ES45300DJ
SIRION 1.0 i 4WD	(M1)	09/00→01/05						ES45300DJ
SIRION 1.3 Sport	(M1)	08/00→01/05						ES45300DJ
SIRION 1.3 Sport 4WD	(M1)	08/00→01/05						ES45300DJ
SIRION 1.0	(M3_)	01/05→						ES45300DJ
SIRION 1.0 DVVT 4WD	(M3_)	04/05→						ES45300DJ
SIRION 1.3	(M3_)	01/05→						ES45300DJ
SIRION 1.3 4WD	(M3_)	04/05→						ES45300DJ
SIRION 1.3	(M3_)	03/08→						ES35240DJ
SIRION 1.3 4WD	(M3_)	03/08→						ES35240DJ
SIRION 1.5	(M3_)	03/08→						ES45300DJ
SIRION 1.5 4WD	(M3_)	05/06→10/08						ES45300DJ
TERIOS 0.7	(J1)	09/00→						ES35240DJ
TERIOS 0.7 4WD	(J1)	05/97→08/00						ES35240DJ
TERIOS 0.7	(J1)	09/00→						ES35240DJ
TERIOS 0.7 4WD	(J1)	05/97→08/00						ES35240DJ
TERIOS 1.3 4WD	(J1)	10/97→10/00						ES45300DJ
TERIOS 1.3	(J1)	09/01→10/05						ES45300DJ
TERIOS 1.3 4WD	(J1)	10/00→10/05						ES45300DJ
TERIOS 1.3 DVVT	(J2_)	11/05→						ES45300DJ
TERIOS 1.3 DVVT 4x4	(J2_)	11/05→						ES45300DJ
TERIOS 1.5	(J2_)	11/05→						ES45300DJ
TERIOS 1.5 4WD	(J2_)	05/06→						ES45300DJ
TREVIS 1.0		06/06→						ES35240DJ
YRV 1.0	(M2)	02/01→						ES35240DJ
YRV 1.3	(M2)	02/01→						ES45300DJ
YRV 1.3 4WD	(M2)	02/01→						ES45300DJ
YRV 1.3 GTti	(M2)	07/02→						ES45300DJ
DAIMLER								
DAIML DAIMLER Six 4.0	(X300)	09/94→		RUN95D		ETS92ND-ETS95D1N		434440ES
DAIML DAIMLER 4.0 Super	(X300)	09/92→09/94		RUN95D		ETS92ND-ETS95D1N		434440ES
DAIML DAIMLER Six 4.0	(X300)	07/97→		RUN95D		ETS92ND-ETS95D1N		434440ES
DAIML DAIMLER 4.0 Long	(X300)	10/97→08/05		RUN95D		ETS92ND-ETS95D1N		434440ES
DAIML DAIMLER V8 Super 4.0	(X300)	07/97→		RUN95D		ETS92ND-ETS95D1N		434440ES
DAIML DAIMLER Double Six 6.0	(X300)	09/94→		RUN95D		ETS92ND-ETS95D1N		434440ES

	Design		START	RUN	MAGIS	ETS	ETS alternative	ES
FERRARI								
FERRA 348 TB 3.4		02/90→10/93		RUN72D	MAG74D	ETS74ND	ETS70D1N-ETS74DI	476420ES
FERRA 348 TB 3.4		10/93→04/94		RUN72D	MAG74D	ETS74ND	ETS70D1N-ETS74DI	476420ES
FERRA 348 TS 3.4		08/90→10/93		RUN72D	MAG74D	ETS74ND	ETS70D1N-ETS74DI	476420ES
FERRA 348 TS 3.4		10/93→12/95		RUN72D	MAG74D	ETS74ND	ETS70D1N-ETS74DI	476420ES
FERRA 360 MODENA 360 F1	(F131)	03/99→		RUN72D	MAG74D	ETS74ND	ETS70D1N-ETS74DI	476420ES
FERRA 360 MODENA Challenge Stradale	(F131)	05/03→		RUN72D	MAG74D	ETS74ND	ETS70D1N-ETS74DI	476420ES
FERRA 360 MODENA Spider 3.6	(F131)	02/00→		RUN72D	MAG74D	ETS74ND	ETS70D1N-ETS74DI	476420ES
FERRA 456 GT 5.5		01/93→		RUN72D	MAG74D	ETS74ND	ETS70D1N-ETS74DI	476420ES
FERRA 456 GT 5.5 (F116)		01/93→		RUN72D	MAG74D	ETS74ND	ETS70D1N-ETS74DI	476420ES
FERRA 512 M 4.9		11/94→08/96		RUN72D	MAG74D	ETS74ND	ETS70D1N-ETS74DI	476420ES
FERRA 512 M 5.0		11/94→08/96		RUN72D	MAG74D	ETS74ND	ETS70D1N-ETS74DI	476420ES
FERRA 512 TR 5.0		01/92→10/94		RUN72D	MAG74D	ETS74ND	ETS70D1N-ETS74DI	476420ES
FERRA 5__ MARANELLO 550		09/96→		RUN72D	MAG74D	ETS74ND	ETS70D1N-ETS74DI	476420ES
FERRA 5__ MARANELLO 575 M		04/02→		RUN72D	MAG74D	ETS74ND	ETS70D1N-ETS74DI	476420ES
FERRA 550 BARCHETTA 5.5		10/00→		RUN72D	MAG74D	ETS74ND	ETS70D1N-ETS74DI	476420ES
FERRA 599 GTB FIORANO 6.0		06/06→		RUN95D		ETS92ND-ETS95D1N		434440ES
FERRA 599 GTB FIORANO 6.0		06/06→		RUN95D		ETS92ND-ETS95D1N		434440ES
FERRA 612 SCAGLIETTI 5.7		04/04→		RUN95D		ETS92ND-ETS95D1N		434440ES
FERRA CALIFORNIA 4.3		07/08→		RUN72D	MAG74D	ETS74ND	ETS70D1N-ETS74DI	476420ES
FERRA ENZO FERRARI 6.0		09/03→		RUN72D	MAG74D	ETS74ND	ETS70D1N-ETS74DI	476420ES
FERRA F355 BERLINETTA 3.5		05/94→03/99		RUN72D	MAG74D	ETS74ND	ETS70D1N-ETS74DI	476420ES
FERRA F355 GTS 3.5 Spider		07/94→		RUN72D	MAG74D	ETS74ND	ETS70D1N-ETS74DI	476420ES
FERRA F430 4.3		03/05→		RUN72D	MAG74D	ETS74ND	ETS70D1N-ETS74DI	476420ES
FERRA F430 4.3		09/07→		RUN72D	MAG74D	ETS74ND	ETS70D1N-ETS74DI	476420ES
FERRA F430 Spider 4.3		05/05→		RUN72D	MAG74D	ETS74ND	ETS70D1N-ETS74DI	476420ES
FERRA F430 Spider 4.3		04/07→		RUN72D	MAG74D	ETS74ND	ETS70D1N-ETS74DI	476420ES
FIAT								
BARCHETTA 1.8 16V	(183)	04/95→		RUN50D				
BRAVA 1.2 16V 80	(182)	10/00→10/01		RUN50D	MAG50D-MAG45D	ETS50ND-ETS45ND	ETS50D3N-ETS50D4N	436210ES
BRAVA 1.2 16V 80	(182)	12/98→10/00		RUN50D	MAG50D-MAG45D	ETS50ND-ETS45ND	ETS50D3N-ETS50D4N	436210ES
BRAVA 1.4 (182.BG)	(182)	10/95→10/01		RUN50D	MAG50D-MAG45D	ETS50ND-ETS45ND	ETS50D3N-ETS50D4N	436210ES
BRAVA 1.4 12 V (182.BA)	(182)	10/95→08/98		RUN50D	MAG50D-MAG45D	ETS50ND-ETS45ND	ETS50D3N-ETS50D4N	436210ES
BRAVA 1.6 16V (182.BH)	(182)	10/95→10/01		RUN50D				
BRAVA 1.6 16V (182.BB)	(182)	02/96→10/01		RUN50D				
BRAVA 1.8 GT 16V (182.BC)	(182)	10/95→10/01		RUN50D				
BRAVA 2.0	(182)	09/98→08/00		RUN62D	MAG62D	ETS62ND	ETS60D3N	438320ES
BRAVA 1.9 D	(182)	10/95→10/01		RUN62D	MAG62D	ETS62ND	ETS60D3N	438320ES
BRAVA 1.9 TD 75 S (182.BF)	(182)	03/96→10/01		RUN62D	MAG62D	ETS62ND	ETS60D3N	438320ES
BRAVA 1.9 TD 100 S (182.BF)	(182)	03/96→10/01		RUN62D	MAG62D	ETS62ND	ETS60D3N	438320ES
BRAVA 1.9 JTD	(182)	09/00→10/01		RUN62D	MAG62D	ETS62ND	ETS60D3N	438320ES
BRAVA 1.9 JTD 105	(182)	12/98→10/01		RUN62D	MAG62D	ETS62ND	ETS60D3N	438320ES
BRAVO 1.2 16V 80	(182)	10/00→10/01		RUN50D	MAG50D-MAG45D	ETS50ND-ETS45ND	ETS50D3N-ETS50D4N	436210ES
BRAVO 1.2 16V 80	(182)	12/98→10/00		RUN50D	MAG50D-MAG45D	ETS50ND-ETS45ND	ETS50D3N-ETS50D4N	436210ES
BRAVO 1.4 (182.AG)	(182)	10/95→10/01		RUN50D	MAG50D-MAG45D	ETS50ND-ETS45ND	ETS50D3N-ETS50D4N	436210ES
BRAVO 1.4 (182.AA)	(182)	10/95→10/01		RUN50D	MAG50D-MAG45D	ETS50ND-ETS45ND	ETS50D3N-ETS50D4N	436210ES
BRAVO 1.6 16V (182.AH)	(182)	10/95→10/01		RUN50D				

	Design		START	RUN	MAGIS	ETS	ETS alternative	ES
FIAT								
BRAVO 1.6 16V (182.AB)	(182)	03/96→10/01		RUN50D				
BRAVO 1.6	(182)	09/00→02/02		RUN50D				
BRAVO 1.8 GT (182.AC)	(182)	10/95→10/01		RUN50D				
BRAVO 2.0 HGT 20V (182.AD)	(182)	10/95→07/98		RUN62D	MAG62D	ETS62ND	ETS60D3N	438320ES
BRAVO 2.0 HGT 20V (182AQ)	(182)	07/98→10/01		RUN62D	MAG62D	ETS62ND	ETS60D3N	438320ES
BRAVO 1.9 D	(182)	10/95→10/01		RUN62D	MAG62D	ETS62ND	ETS60D3N	438320ES
BRAVO 1.9 TD 75 S (182.AF)	(182)	03/96→10/01		RUN62D	MAG62D	ETS62ND	ETS60D3N	438320ES
BRAVO 1.9 TD 100 S (182.AF)	(182)	03/96→10/01		RUN62D	MAG62D	ETS62ND	ETS60D3N	438320ES
BRAVO 1.9 JTD	(182)	09/00→10/01		RUN62D	MAG62D	ETS62ND	ETS60D3N	438320ES
BRAVO 1.9 JTD 105	(182)	12/98→10/01		RUN62D	MAG62D	ETS62ND	ETS60D3N	438320ES
BRAVO 1.4		04/07→		RUN50D				
BRAVO 1.4 T-Jet		09/07→		RUN50D				
BRAVO 1.4 T-Jet		09/07→		RUN50D				
BRAVO 1.6 D Multijet		03/08→		RUN62D	MAG62D	ETS62ND	ETS60D3N	438320ES
BRAVO 1.6 D Multijet		03/08→		RUN62D	MAG62D	ETS62ND	ETS60D3N	438320ES
BRAVO 1.9 D Multijet		04/07→12/08		RUN72D	MAG74D	ETS74ND	ETS70D1N-ETS74DI	476420ES
BRAVO 1.9 D Multijet		04/07→		RUN72D	MAG74D	ETS74ND	ETS70D1N-ETS74DI	476420ES
BRAVO 1.9 D Multijet		04/07→		RUN72D	MAG74D	ETS74ND	ETS70D1N-ETS74DI	476420ES
BRAVO 2.0 D Multijet		09/08→		RUN72D	MAG74D	ETS74ND	ETS70D1N-ETS74DI	476420ES
CINQUECENTO 0.7 i (170AD)	(170)	07/94→01/98		RUN44D			ETS44D2N-ETS40D1N	ES40320D
CINQUECENTO 0.7 (170AA)	(170)	12/91→01/96		RUN44D			ETS44D2N-ETS40D1N	ES40320D
CINQUECENTO 0.9 i.e. S (170AF, 170CF)	(170)	07/91→07/99		RUN44D			ETS44D2N-ETS40D1N	ES40320D
CINQUECENTO 0.9 (170AB)	(170)	07/91→12/93		RUN44D			ETS44D2N-ETS40D1N	ES40320D
CINQUECENTO 0.9 i.e. (170AC)	(170)	07/91→12/93		RUN44D			ETS44D2N-ETS40D1N	ES40320D
CINQUECENTO 1.1 Sporting (170AH)	(170)	10/94→01/98		RUN44D			ETS44D2N-ETS40D1N	ES40320D
COUPE 1.8 16V	(FA/175)	03/96→08/00		RUN62D	MAG62D	ETS62ND	ETS60D3N	438320ES
COUPE 2.0 16V	(FA/175)	11/93→08/96		RUN62D	MAG62D	ETS62ND	ETS60D3N	438320ES
COUPE 2.0 20V	(FA/175)	08/96→04/98		RUN62D	MAG62D	ETS62ND	ETS60D3N	438320ES
COUPE 2.0 20V	(FA/175)	04/98→08/00		RUN62D	MAG62D	ETS62ND	ETS60D3N	438320ES
COUPE 2.0 16V Turbo	(FA/175)	11/93→08/96		RUN62D	MAG62D	ETS62ND	ETS60D3N	438320ES
COUPE 2.0 20V Turbo	(FA/175)	08/96→08/00		RUN62D	MAG62D	ETS62ND	ETS60D3N	438320ES
CROMA 2000 CHT	(154)	01/91→09/92		RUN62D	MAG62D	ETS62ND	ETS60D3N	438320ES
CROMA 2000 16V	(154)	08/92→08/96		RUN62D	MAG62D	ETS62ND	ETS60D3N	438320ES
CROMA 2500 V6	(154)	06/93→08/96		RUN62D	MAG62D	ETS62ND	ETS60D3N	438320ES
CROMA 1900 Turbo D i.d.	(154)	11/92→12/96		RUN72D	MAG74D	ETS74ND	ETS70D1N-ETS74DI	476420ES
CROMA 2500 TDE	(154)	12/91→08/96		RUN72D	MAG74D	ETS74ND	ETS70D1N-ETS74DI	476420ES
CROMA 1.8 16V	(194)	12/05→		RUN62D	MAG62D	ETS62ND	ETS60D3N	438320ES
CROMA 2.2 16V	(194)	06/05→		RUN62D	MAG62D	ETS62ND	ETS60D3N	438320ES
CROMA 1.9 D Multijet	(194)	06/05→		RUN72D	MAG74D	ETS74ND	ETS70D1N-ETS74DI	476420ES
CROMA 1.9 D Multijet	(194)	06/05→		RUN72D	MAG74D	ETS74ND	ETS70D1N-ETS74DI	476420ES
CROMA 1.9 D Multijet	(194)	06/05→		RUN72D	MAG74D	ETS74ND	ETS70D1N-ETS74DI	476420ES
CROMA 2.4 D Multijet	(194)	06/05→			MAG82D	ETS80ND	ETS90D1N	
DOBLO 1.2 (223AXA1A)	(119)	03/01→		RUN44D			ETS44D2N	
DOBLO 1.4	(119)	10/05→		RUN50D	MAG50D	ETS50ND	ETS50D3N-ETS50D4N	
DOBLO 1.4	Stop/Start	01/10→	SST63D					
DOBLO 1.6	(119)	09/02→		RUN50D	MAG50D-MAG45D	ETS50ND-ETS45ND	ETS50D3N-ETS50D4N	436210ES
DOBLO 1.6 16V (223AXD1A)	(119)	10/01→		RUN50D	MAG50D-MAG45D	ETS50ND-ETS45ND	ETS50D3N-ETS50D4N	436210ES

	Design		START	RUN	MAGIS	ETS	ETS alternative	ES
FIAT								
DOBLO 1.6 Natural Power	(119)	09/02→		RUN50D	MAG50D	ETS50ND	ETS50D3N-ETS50D4N	
DOBLO 1.3 JTD	(119)	05/05→		RUN62D	MAG62D	ETS62ND	ETS60D3N	438320ES
DOBLO 1.3 D Multijet	Stop/Start	01/10→	SST63D					
DOBLO 1.3 D Multijet	(119)	10/05→		RUN62D	MAG62D	ETS62ND	ETS60D3N	438320ES
DOBLO 1.9 D (223AXB1A)	(119)	03/01→		RUN62D	MAG62D	ETS62ND	ETS60D3N	438320ES
DOBLO 1.9 JTD (223AXE1A)	(119)	10/01→		RUN62D	MAG62D	ETS62ND	ETS60D3N	438320ES
DOBLO 1.9 JTD	(119)	07/03→		RUN62D	MAG62D	ETS62ND	ETS60D3N	438320ES
DOBLO 1.9 D Multijet	(119)	10/05→		RUN72D	MAG74D	ETS74ND	ETS70D1N-ETS74DI	476420ES
DOBLO 1.9 D Multijet	Stop/Start	01/10→	SST72D					
DOBLO Cargo 1.2 (223ZXA1A)	(223)	03/01→		RUN44D			ETS44D2N-ETS40D1N	ES40320D
DOBLO Cargo 1.4	(223)	10/05→		RUN50D	MAG50D	ETS50ND	ETS50D3N-ETS50D4N	
DOBLO Cargo 1.6 16V (223ZXD1A)	(223)	10/01→		RUN50D	MAG50D-MAG45D	ETS50ND-ETS45ND	ETS50D3N-ETS50D4N	436210ES
DOBLO Cargo 1.6 Natural Power	(223)	09/02→		RUN50D	MAG50D-MAG45D	ETS50ND-ETS45ND	ETS50D3N-ETS50D4N	436210ES
DOBLO Cargo 1.3 JTD 16V	(223)	05/04→		RUN62D	MAG62D	ETS62ND	ETS60D3N	438320ES
DOBLO Cargo 1.3 D Multijet	(223)	10/05→		RUN62D	MAG62D	ETS62ND	ETS60D3N	438320ES
DOBLO Cargo 1.9 D (223ZXB1A)	(223)	03/01→		RUN62D	MAG62D	ETS62ND	ETS60D3N	438320ES
DOBLO Cargo 1.9 JTD (223ZXE1A)	(223)	10/01→		RUN62D	MAG62D	ETS62ND	ETS60D3N	438320ES
DOBLO Cargo 1.9 JTD	(223)	07/03→		RUN62D	MAG62D	ETS62ND	ETS60D3N	438320ES
DUNA Saloon 1.1		07/91→07/96				ETS40NS		
DUNA Saloon 1.4		07/91→07/96				ETS40NS		
DUNA Hatchback 0.9		07/91→10/95				ETS40NS		
DUNA Hatchback 1.1		07/91→07/96				ETS40NS		
DUNA Hatchback 1.4		07/91→07/96				ETS40NS		
DUNA Hatchback 1.4 Turbo		07/91→10/95				ETS40NS		
ELBA 1.3	(146_)	04/91→10/93		RUN62D	MAG62D	ETS62ND	ETS60D3N	438320ES
ELBA 1.3	(146_)	04/91→02/95		RUN62D	MAG62D	ETS62ND	ETS60D3N	438320ES
ELBA 1.4	(146_)	10/93→02/95		RUN62D	MAG62D	ETS62ND	ETS60D3N	438320ES
ELBA 1.5	(146_)	01/92→12/96		RUN62D	MAG62D	ETS62ND	ETS60D3N	438320ES
ELBA 1.5	(146_)	01/92→12/96		RUN62D	MAG62D	ETS62ND	ETS60D3N	438320ES
ELBA 1.6	(146_)	01/94→12/96		RUN62D	MAG62D	ETS62ND	ETS60D3N	438320ES
FIORINO Box 1.3	(146 Uno)	06/94→09/98		RUN50D	MAG50D-MAG45D	ETS50ND-ETS45ND	ETS50D3N-ETS50D4N	436210ES
FIORINO Box 70 i.e. 1.4	(146 Uno)	05/94→05/01		RUN50D	MAG50D-MAG45D	ETS50ND-ETS45ND	ETS50D3N-ETS50D4N	436210ES
FIORINO Box 75 i.e. 1.6	(146 Uno)	10/93→05/01		RUN50D	MAG50D-MAG45D	ETS50ND-ETS45ND	ETS50D3N-ETS50D4N	436210ES
FIORINO Box 65 1.7 TD	(146 Uno)	01/97→05/01		RUN72D	MAG74D	ETS74ND	ETS70D1N-ETS74DI	476420ES
FIORINO Pick up 1.3	(146)	06/94→09/98		RUN50D	MAG50D-MAG45D	ETS50ND-ETS45ND	ETS50D3N-ETS50D4N	436210ES
FIORINO Pick up 1.4	(146)	05/94→05/01		RUN50D	MAG50D-MAG45D	ETS50ND-ETS45ND	ETS50D3N-ETS50D4N	436210ES
FIORINO Pick up 1.6	(146)	01/94→05/01		RUN50D	MAG50D-MAG45D	ETS50ND-ETS45ND	ETS50D3N-ETS50D4N	436210ES
FIORINO Pick up 1.7 D	(146)	10/93→10/99		RUN62D	MAG62D	ETS62ND	ETS60D3N	438320ES
FIORINO Pick up 1.7 TD	(146)	01/97→05/01			MAG72DB	ETS71NDB		
FIORINO Box 1.4		02/08→		RUN50D	MAG50D	ETS50ND	ETS50D3N-ETS50D4N	
FIORINO Box 1.4 Natural Power		10/09→		RUN50D	MAG50D	ETS50ND	ETS50D3N-ETS50D4N	
FIORINO Box 1.3 D Multijet		02/08→		RUN50D	MAG50D	ETS50ND	ETS50D3N-ETS50D4N	
GRANDE PUNTO 1.2	(199)	10/05→		RUN44D			ETS44D2N	
GRANDE PUNTO 1.4	(199)	10/05→		RUN50D	MAG50D-MAG45D	ETS50ND-ETS45ND	ETS50D3N-ETS50D4N	436210ES
GRANDE PUNTO 1.4 16V	(199)	10/05→		RUN50D	MAG50D	ETS50ND	ETS50D3N-ETS50D4N	
GRANDE PUNTO 1.4 T-Jet	(199)	09/07→		RUN50D	MAG50D	ETS50ND	ETS50D3N-ETS50D4N	
GRANDE PUNTO 1.4 Abarth	(199)	12/07→		RUN50D	MAG50D	ETS50ND	ETS50D3N-ETS50D4N	

	Design		START	RUN	MAGIS	ETS	ETS alternative	ES
FIAT								
GRANDE PUNTO 1.3 D Multijet	(199)	10/05→		RUN50D	MAG50D	ETS50ND	ETS50D3N-ETS50D4N	
GRANDE PUNTO 1.3 D Multijet	(199)	10/05→		RUN50D	MAG50D	ETS50ND	ETS50D3N-ETS50D4N	
GRANDE PUNTO 1.9 D Multijet	(199)	10/05→		RUN62D	MAG62D	ETS62ND	ETS60D3N	438320ES
GRANDE PUNTO 1.9 D Multijet	(199)	10/05→		RUN62D	MAG62D	ETS62ND	ETS60D3N	438320ES
IDEA 1.2 16V		01/04→		RUN50D	MAG50D	ETS50ND	ETS50D3N-ETS50D4N	
IDEA 1.4		10/05→		RUN50D	MAG50D	ETS50ND	ETS50D3N-ETS50D4N	
IDEA 1.4		12/03→		RUN50D	MAG50D	ETS50ND	ETS50D3N-ETS50D4N	
IDEA 1.4 16V		01/04→		RUN50D	MAG50D	ETS50ND	ETS50D3N-ETS50D4N	
IDEA 1.3 JTD		01/04→		RUN50D	MAG50D	ETS50ND	ETS50D3N-ETS50D4N	
IDEA 1.3 D Multijet		10/05→		RUN50D	MAG50D-MAG45D	ETS50ND-ETS45ND	ETS50D3N-ETS50D4N	436210ES
IDEA 1.9 JTD		01/04→		RUN62D	MAG62D	ETS62ND	ETS60D3N	438320ES
LINEA 1.4		06/07→		RUN50D	MAG50D	ETS50ND	ETS50D3N-ETS50D4N	
LINEA 1.4 T-Jet		09/07→		RUN50D	MAG50D	ETS50ND	ETS50D3N-ETS50D4N	
LINEA 1.3 D Multijet		06/07→		RUN50D	MAG50D	ETS50ND	ETS50D3N-ETS50D4N	
LINEA 1.6 D Multijet		06/09→		RUN62D	MAG62D	ETS62ND	ETS60D3N	438320ES
MAREA 1.2 16V	(185)	10/98→		RUN50D	MAG50D-MAG45D	ETS50ND-ETS45ND	ETS50D3N-ETS50D4N	436210ES
MAREA 1.4 80 12V	(185)	09/96→		RUN50D	MAG50D-MAG45D	ETS50ND-ETS45ND	ETS50D3N-ETS50D4N	436210ES
MAREA 1.6 100 16V	(185)	09/96→		RUN50D	MAG50D	ETS50ND	ETS50D3N-ETS50D4N	
MAREA 1.6	(185)	09/00→08/02		RUN50D	MAG50D	ETS50ND	ETS50D3N-ETS50D4N	
MAREA 1.6 100 16V Bipower	(185)	04/99→		RUN50D	MAG50D	ETS50ND	ETS50D3N-ETS50D4N	
MAREA 1.8 115 16V	(185)	09/96→		RUN50D	MAG50D	ETS50ND	ETS50D3N-ETS50D4N	
MAREA 2.0 150 20V	(185)	09/96→04/99		RUN50D	MAG50D	ETS50ND	ETS50D3N-ETS50D4N	
MAREA 2.0 150 20V	(185)	01/01→		RUN50D	MAG50D	ETS50ND	ETS50D3N-ETS50D4N	
MAREA 2.0 155 20V	(185)	04/99→01/01		RUN50D	MAG50D	ETS50ND	ETS50D3N-ETS50D4N	
MAREA 1.9 TD 75	(185)	09/96→		RUN62D	MAG62D	ETS62ND	ETS60D3N	438320ES
MAREA 1.9 TD 100	(185)	09/96→		RUN62D	MAG62D	ETS62ND	ETS60D3N	438320ES
MAREA 1.9 JTD 105	(185)	04/99→01/01		RUN62D	MAG62D	ETS62ND	ETS60D3N	438320ES
MAREA 1.9 JTD 110	(185)	01/01→		RUN62D	MAG62D	ETS62ND	ETS60D3N	438320ES
MAREA 2.4 TD 125	(185)	09/96→04/99		RUN62D	MAG62D	ETS62ND	ETS60D3N	438320ES
MAREA 2.4 JTD 130	(185)	04/99→		RUN72D				
MAREA Weekend 1.2 16V	(185)	10/98→		RUN50D	MAG50D-MAG45D	ETS50ND-ETS45ND	ETS50D3N-ETS50D4N	436210ES
MAREA Weekend 1.4 80 12V	(185)	09/96→		RUN50D	MAG50D-MAG45D	ETS50ND-ETS45ND	ETS50D3N-ETS50D4N	436210ES
MAREA Weekend 1.6 100 16V	(185)	09/96→		RUN50D	MAG50D-MAG45D	ETS50ND-ETS45ND	ETS50D3N-ETS50D4N	436210ES
MAREA Weekend 1.8 115 16V	(185)	09/96→		RUN50D	MAG50D-MAG45D	ETS50ND-ETS45ND	ETS50D3N-ETS50D4N	436210ES
MAREA Weekend 2.0 150 20V	(185)	09/96→04/99		RUN50D	MAG50D	ETS50ND	ETS50D3N-ETS50D4N	
MAREA Weekend 2.0 150 20V	(185)	01/01→		RUN50D	MAG50D	ETS50ND	ETS50D3N-ETS50D4N	
MAREA Weekend 2.0 155 20V	(185)	04/99→01/01		RUN50D	MAG50D	ETS50ND	ETS50D3N-ETS50D4N	
MAREA Weekend 1.9 TD 75	(185)	09/96→		RUN62D	MAG62D	ETS62ND	ETS60D3N	438320ES
MAREA Weekend 1.9 TD 100	(185)	09/96→		RUN62D	MAG62D	ETS62ND	ETS60D3N	438320ES
MAREA Weekend 1.9 JTD 105	(185)	04/99→		RUN72D	MAG74D	ETS74ND	ETS70D1N-ETS74DI	476420ES
MAREA Weekend 1.9 JTD 110	(185)	01/01→		RUN62D	MAG62D	ETS62ND	ETS60D3N	438320ES
MAREA Weekend 2.4 TD 125	(185)	09/96→04/99		RUN72D	MAG74D	ETS74ND	ETS70D1N-ETS74DI	476420ES
MAREA Weekend 2.4 JTD 130	(185)	04/99→		RUN72D	MAG74D	ETS74ND	ETS70D1N-ETS74DI	476420ES
MULTIPLA 1.6 16V Blupower (186AMA1A)	(186)	04/99→		RUN50D	MAG50D	ETS50ND	ETS50D3N-ETS50D4N	
MULTIPLA 1.6 16V Bipower (186AMB1A)	(186)	04/99→		RUN50D	MAG50D	ETS50ND	ETS50D3N-ETS50D4N	
MULTIPLA 1.6 100 16V (186AXA1A)	(186)	04/99→		RUN50D	MAG50D	ETS50ND	ETS50D3N-ETS50D4N	
MULTIPLA 1.6	(186)	05/04→08/05		RUN50D	MAG50D	ETS50ND	ETS50D3N-ETS50D4N	

	Design		START	RUN	MAGIS	ETS	ETS alternative	ES
FIAT								
MULTIPLA 1.6 16V Blupower (186AGB1A)	(186)	04/02→		RUN50D	MAG50D	ETS50ND	ETS50D3N-ETS50D4N	
MULTIPLA 1.6	(186)	09/00→02/01		RUN50D	MAG50D	ETS50ND	ETS50D3N-ETS50D4N	
MULTIPLA 1.6 16V Bipower (186AXC1A)	(186)	10/01→		RUN50D	MAG50D	ETS50ND	ETS50D3N-ETS50D4N	
MULTIPLA 1.9 JTD 105 (186AXB1A)	(186)	04/99→		RUN62D	MAG62D	ETS62ND	ETS60D3N	438320ES
MULTIPLA 1.9 JTD 110	(186)	03/01→07/02		RUN72D	MAG74D	ETS74ND	ETS70D1N-ETS74DI	476420ES
MULTIPLA 1.9 JTD 115	(186)	07/02→		RUN72D	MAG74D	ETS74ND	ETS70D1N-ETS74DI	476420ES
MULTIPLA 1.9 JTD (186AXE1A)	(186)	04/02→		RUN72D	MAG74D	ETS74ND	ETS70D1N-ETS74DI	476420ES
PALIO 1.0	(178BX)	04/96→		RUN50D	MAG50D	ETS50ND	ETS50D3N-ETS50D4N	
PALIO 1.0	(178BX)	04/96→		RUN50D	MAG50D	ETS50ND	ETS50D3N-ETS50D4N	
PALIO 1.2	(178BX)	06/98→		RUN50D	MAG50D	ETS50ND	ETS50D3N-ETS50D4N	
PALIO 1.4	(178BX)	04/96→		RUN50D	MAG50D-MAG45D	ETS50ND-ETS45ND	ETS50D3N-ETS50D4N	436210ES
PALIO 1.4 CAT	(178BX)	04/96→		RUN50D	MAG50D-MAG45D	ETS50ND-ETS45ND	ETS50D3N-ETS50D4N	436210ES
PALIO 1.5	(178BX)	04/96→06/98		RUN50D	MAG50D-MAG45D	ETS50ND-ETS45ND	ETS50D3N-ETS50D4N	436210ES
PALIO 1.6 16V	(178BX)	04/96→		RUN50D	MAG50D-MAG45D	ETS50ND-ETS45ND	ETS50D3N-ETS50D4N	436210ES
PALIO 1.8	(178BX)	10/05→		RUN62D	MAG62D	ETS62ND	ETS60D3N	438320ES
PALIO Weekend 1.0	(178DX)	07/98→10/03		RUN50D	MAG50D-MAG45D	ETS50ND-ETS45ND	ETS50D3N-ETS50D4N	436210ES
PALIO Weekend 1.2 (178DYA1A)	(178DX)	02/01→		RUN50D	MAG50D	ETS50ND	ETS50D3N-ETS50D4N	
PALIO Weekend 1.2 (178DX.G1A)	(178DX)	04/96→02/01		RUN50D	MAG50D	ETS50ND	ETS50D3N-ETS50D4N	
PALIO Weekend 1.6 16V (178DX.D1A)	(178DX)	04/96→02/01		RUN50D	MAG50D-MAG45D	ETS50ND-ETS45ND	ETS50D3N-ETS50D4N	436210ES
PALIO Weekend 1.6 16V (178DYC1A06)	(178DX)	02/01→		RUN50D	MAG50D-MAG45D	ETS50ND-ETS45ND	ETS50D3N-ETS50D4N	436210ES
PALIO Weekend 1.7 TD (178DX.H1A)	(178DX)	04/96→03/01		RUN62D	MAG62D	ETS62ND	ETS60D3N	438320ES
PALIO Weekend 1.9 D (178DYD1A07)	(178DX)	03/01→		RUN62D	MAG62D	ETS62ND	ETS60D3N	438320ES
PANDA 750 (141AM) CAT	(141A_)	01/95→12/97		RUN50D	MAG50D-MAG45D	ETS50ND-ETS45ND	ETS50D3N-ETS50D4N	436210ES
PANDA 900	(141A_)	04/92→12/96		RUN50D	MAG50D-MAG45D	ETS50ND-ETS45ND	ETS50D3N-ETS50D4N	436210ES
PANDA 1100	(141A_)	05/91→12/99		RUN50D	MAG50D	ETS50ND	ETS50D3N-ETS50D4N	
PANDA 1100 Trekking 4x4	(141A_)	10/91→07/04		RUN50D	MAG50D	ETS50ND	ETS50D3N-ETS50D4N	
PANDA 1100	(141A_)	02/95→09/03		RUN50D	MAG50D	ETS50ND	ETS50D3N-ETS50D4N	
PANDA 1100 4x4	(141A_)	02/95→07/04		RUN50D	MAG50D	ETS50ND	ETS50D3N-ETS50D4N	
PANDA Van 1000 i.e	(141_)	08/92→02/04		RUN50D	MAG50D-MAG45D	ETS50ND-ETS45ND	ETS50D3N-ETS50D4N	436210ES
PANDA 1.1	(169)	09/03→		RUN50D	MAG50D-MAG45D	ETS50ND-ETS45ND	ETS50D3N-ETS50D4N	436210ES
PANDA 1.2	(169)	09/03→		RUN50D	MAG50D-MAG45D	ETS50ND-ETS45ND	ETS50D3N-ETS50D4N	436210ES
PANDA 1.2 Bi-Power / Natural Power	(169)	01/07→		RUN44D			ETS44D2N	
PANDA 1.2 LPG	(169)	04/09→		RUN44D			ETS44D2N	
PANDA 1.2 4x4	(169)	10/04→		RUN50D	MAG50D-MAG45D	ETS50ND-ETS45ND	ETS50D3N-ETS50D4N	436210ES
PANDA 1.4	(169)	10/06→		RUN50D	MAG50D	ETS50ND	ETS50D3N-ETS50D4N	
PANDA 1.3 D Multijet	(169)	09/03→		RUN50D	MAG50D	ETS50ND	ETS50D3N-ETS50D4N	
PANDA 1.3 D Multijet 4x4	(169)	10/04→		RUN50D	MAG50D	ETS50ND	ETS50D3N-ETS50D4N	
PANDA 1.3 D Multijet	(169)	06/06→		RUN50D	MAG50D	ETS50ND	ETS50D3N-ETS50D4N	
PANDA Van 1.2	(169)	09/04→		RUN44D			ETS44D2N	
PANDA Van 1.2 4x4	(169)	09/04→		RUN44D			ETS44D2N	
PANDA Van 1.3 JTD	(169)	03/04→		RUN50D	MAG50D	ETS50ND	ETS50D3N-ETS50D4N	
PANDA Van 1.3 JTD	(169)	01/06→		RUN50D	MAG50D	ETS50ND	ETS50D3N-ETS50D4N	
PREMIO 1.5 i.e.		06/92→12/96		RUN50D	MAG50D	ETS50ND	ETS50D3N-ETS50D4N	
PREMIO 1.6 i.e.		08/93→12/96		RUN50D	MAG50D-MAG45D	ETS50ND-ETS45ND	ETS50D3N-ETS50D4N	436210ES
PUNTO 55 1.1	(176)	09/93→09/99		RUN50D	MAG50D-MAG45D	ETS50ND-ETS45ND	ETS50D3N-ETS50D4N	436210ES
PUNTO 60 1.2	(176)	01/94→09/99		RUN50D	MAG50D-MAG45D	ETS50ND-ETS45ND	ETS50D3N-ETS50D4N	436210ES
PUNTO 60 1.2	(176)	03/94→09/99		RUN50D	MAG50D-MAG45D	ETS50ND-ETS45ND	ETS50D3N-ETS50D4N	436210ES

	Design		START	RUN	MAGIS	ETS	ETS alternative	ES
FIAT								
PUNTO 75 1.2	(176)	10/93→09/99		RUN50D	MAG50D-MAG45D	ETS50ND-ETS45ND	ETS50D3N-ETS50D4N	436210ES
PUNTO 85 16V 1.2	(176)	04/97→09/99		RUN50D	MAG50D-MAG45D	ETS50ND-ETS45ND	ETS50D3N-ETS50D4N	436210ES
PUNTO 1.4 GT Turbo	(176)	09/96→09/99		RUN50D	MAG50D-MAG45D	ETS50ND-ETS45ND	ETS50D3N-ETS50D4N	436210ES
PUNTO 1.4 GT Turbo	(176)	01/94→09/96		RUN50D	MAG50D-MAG45D	ETS50ND-ETS45ND	ETS50D3N-ETS50D4N	436210ES
PUNTO 90 1.6	(176)	01/94→04/97		RUN50D	MAG50D	ETS50ND	ETS50D3N-ETS50D4N	
PUNTO 1.7 D	(176)	04/94→09/97		RUN62D	MAG62D	ETS62ND	ETS60D3N	438320ES
PUNTO 60 TD 1.7	(176)	09/96→09/99		RUN62D	MAG62D	ETS62ND	ETS60D3N	438320ES
PUNTO 1.7 TD	(176)	01/94→09/99		RUN62D	MAG62D	ETS62ND	ETS60D3N	438320ES
PUNTO 1.7 TD	(176)	01/94→09/99		RUN62D	MAG62D	ETS62ND	ETS60D3N	438320ES
PUNTO Convertible 60 1.2	(176C)	04/94→06/00		RUN50D	MAG50D	ETS50ND	ETS50D3N-ETS50D4N	
PUNTO Convertible 60 1.2	(176C)	05/95→06/00		RUN50D	MAG50D	ETS50ND	ETS50D3N-ETS50D4N	
PUNTO Convertible 85 16V 1.2	(176C)	04/97→06/00		RUN50D	MAG50D	ETS50ND	ETS50D3N-ETS50D4N	
PUNTO Convertible 90 1.6	(176C)	04/94→04/97		RUN50D	MAG50D	ETS50ND	ETS50D3N-ETS50D4N	
PUNTO Van 1.1	(176L)	04/96→02/00		RUN50D	MAG50D-MAG45D	ETS50ND-ETS45ND	ETS50D3N-ETS50D4N	436210ES
PUNTO Van 1.7 D	(176L)	04/96→02/00		RUN62D	MAG62D	ETS62ND	ETS60D3N	438320ES
PUNTO Van 1.7 TD	(176L)	04/96→02/00		RUN62D	MAG62D	ETS62ND	ETS60D3N	438320ES
PUNTO 1.2 60 (188.030, .050, .130, .150, .230, .250)	(188)	09/99→		RUN44D			ETS44D2N-ETS40D1N	ES40320D
PUNTO 1.2 Natural Power	(188)	09/03→		RUN50D	MAG50D-MAG45D	ETS50ND-ETS45ND	ETS50D3N-ETS50D4N	436210ES
PUNTO 1.2 16V 80 (188.233, .235, .253, .255, .333, .353, .639, .63	(188)	09/99→		RUN44D			ETS44D2N-ETS40D1N	ES40320D
PUNTO 1.4	(188)	09/03→		RUN50D	MAG50D-MAG45D	ETS50ND-ETS45ND	ETS50D3N-ETS50D4N	436210ES
PUNTO 1.8 130 HGT (188.738, .718)	(188)	09/99→		RUN50D	MAG50D	ETS50ND	ETS50D3N-ETS50D4N	
PUNTO 1.3 JTD 16V	(188)	06/03→		RUN50D	MAG50D	ETS50ND	ETS50D3N-ETS50D4N	
PUNTO 1.9 DS 60 (188.031, .051, .231, .251)	(188)	09/99→		RUN62D	MAG62D	ETS62ND	ETS60D3N	438320ES
PUNTO 1.9 JTD 80 (188.237, .257, .337, .357)	(188)	09/99→		RUN62D	MAG62D	ETS62ND	ETS60D3N	438320ES
PUNTO 1.9 JTD	(188)	10/01→		RUN62D	MAG62D	ETS62ND	ETS60D3N	438320ES
PUNTO 1.9 JTD	(188)	06/03→		RUN62D	MAG62D	ETS62ND	ETS60D3N	438320ES
PUNTO Van 1.2 60	(188AX)	02/00→		RUN44D			ETS44D2N	
PUNTO Van 1.9 D 60	(188AX)	02/00→		RUN62D	MAG62D	ETS62ND	ETS60D3N	438320ES
PUNTO Van 1.9 JTD	(188AX)	02/00→		RUN62D	MAG62D	ETS62ND	ETS60D3N	438320ES
PUNTO EVO 1.2		10/09→		RUN50D	MAG50D	ETS50ND	ETS50D3N-ETS50D4N	
PUNTO EVO 1.4 16 V Multiair	Stop/Start , A	10/09→	SST63D					
PUNTO EVO 1.3 D Multijet		10/09→		RUN62D	MAG62D	ETS62ND	ETS60D3N	438320ES
PUNTO EVO 1.3 D Multijet		10/09→		RUN62D	MAG62D	ETS62ND	ETS60D3N	438320ES
PUNTO EVO 1.3 16 V Multijet	Stop/Start , A	10/09→	SST72D					
PUNTO EVO 1.6 D Multijet		10/09→		RUN62D	MAG62D	ETS62ND	ETS60D3N	438320ES
QUBO 1.4		09/08→		RUN50D	MAG50D	ETS50ND	ETS50D3N-ETS50D4N	
QUBO 1.4 Natural Power		10/09→		RUN50D	MAG50D	ETS50ND	ETS50D3N-ETS50D4N	
QUBO 1.3 D Multijet		09/08→		RUN50D	MAG50D	ETS50ND	ETS50D3N-ETS50D4N	
SCUDO Combinato 1.6	(220P)	02/96→		RUN62D	MAG62D	ETS62ND	ETS60D3N	438320ES
SCUDO Combinato 2.0 16V	(220P)	06/00→		RUN62D	MAG62D	ETS62ND	ETS60D3N	438320ES
SCUDO Combinato 1.9 D	(220P)	04/98→		RUN62D	MAG62D	ETS62ND	ETS60D3N	438320ES
SCUDO Combinato 1.9 D	(220P)	02/96→04/98		RUN72D	MAG74D	ETS74ND	ETS70D1N-ETS74DI	476420ES
SCUDO Combinato 1.9 TD Eco	(220P)	02/96→		RUN62D	MAG62D	ETS62ND	ETS60D3N	438320ES

	Design		START	RUN	MAGIS	ETS	ETS alternative	ES
FIAT								
SCUDO Combinato 1.9 TD	(220P)	02/96→		RUN72D	MAG74D	ETS74ND	ETS70D1N-ETS74DI	476420ES
SCUDO Combinato 2.0 JTD	(220P)	01/04→		RUN72D	MAG74D	ETS74ND	ETS70D1N-ETS74DI	476420ES
SCUDO Combinato 2.0 JTD	(220P)	12/99→		RUN72D	MAG74D	ETS74ND	ETS70D1N-ETS74DI	476420ES
SCUDO Box 1.6	(220L)	02/96→		RUN62D	MAG62D	ETS62ND	ETS60D3N	438320ES
SCUDO Box 2.0	(220L)	05/00→		RUN62D	MAG62D	ETS62ND	ETS60D3N	438320ES
SCUDO Box 1.9 D	(220L)	04/98→		RUN62D	MAG62D	ETS62ND	ETS60D3N	438320ES
SCUDO Box 1.9 D	(220L)	02/96→		RUN62D	MAG62D	ETS62ND	ETS60D3N	438320ES
SCUDO Box 1.9 TD	(220L)	02/96→		RUN62D	MAG62D	ETS62ND	ETS60D3N	438320ES
SCUDO Box 1.9 TD	(220L)	02/98→		RUN62D	MAG62D	ETS62ND	ETS60D3N	438320ES
SCUDO Box 2.0 JTD	(220L)	12/99→		RUN62D	MAG62D	ETS62ND	ETS60D3N	438320ES
SCUDO Box 2.0 JTD	(220L)	12/02→		RUN62D	MAG62D	ETS62ND	ETS60D3N	438320ES
SCUDO 1.6 D Multijet		01/07→		RUN62D	MAG62D	ETS62ND	ETS60D3N	438320ES
SCUDO 2.0 D Multijet		01/07→		RUN72D	MAG74D	ETS74ND	ETS70D1N-ETS74DI	476420ES
SCUDO 2.0 D Multijet		01/07→		RUN72D	MAG74D	ETS74ND	ETS70D1N-ETS74DI	476420ES
SCUDO Box 1.6 D Multijet		01/07→		RUN62D	MAG62D	ETS62ND	ETS60D3N	438320ES
SCUDO Box 2.0 D Multijet		01/07→		RUN72D	MAG74D	ETS74ND	ETS70D1N-ETS74DI	476420ES
SCUDO Box 2.0 D Multijet		01/07→		RUN72D	MAG74D	ETS74ND	ETS70D1N-ETS74DI	476420ES
SCUDO Flatbed / Chassis 1.6 D Multijet		01/07→		RUN62D	MAG62D	ETS62ND	ETS60D3N	438320ES
SCUDO Flatbed / Chassis 2.0 D Multijet		01/07→		RUN72D	MAG74D	ETS74ND	ETS70D1N-ETS74DI	476420ES
SCUDO Flatbed / Chassis 2.0 D Multijet		01/07→		RUN72D	MAG74D	ETS74ND	ETS70D1N-ETS74DI	476420ES
SEDICI 1.6 16V		06/06→		RUN50D	MAG50D	ETS50ND	ETS50D3N-ETS50D4N	
SEDICI 1.6 16V 4x4		06/06→		RUN50D	MAG50D	ETS50ND	ETS50D3N-ETS50D4N	
SEDICI 1.9 D Multijet		06/06→		RUN62D	MAG62D	ETS62ND	ETS60D3N	438320ES
SEICENTO 0.9 (187AXA, 187AXA1A)	(187)	01/98→		RUN44D			ETS44D2N-ETS40D1N	ES40320D
SEICENTO 1.1 (187AXB, 187AXB1A)	(187)	01/98→		RUN44D			ETS44D2N-ETS40D1N	ES40320D
SEICENTO Elektra (187AEA1A, 187BEA1A)	(187)	01/99→			MAG62DB	ETS60NDB-ETS50NDB		ES60NDB
SEICENTO Van 0.9 (187AXA)	(187)	01/98→		RUN44D			ETS44D2N-ETS40D1N	ES40320D
SEICENTO Van 1.1 (187CXB/C)	(187)	01/98→		RUN44D			ETS44D2N-ETS40D1N	ES40320D
SIENA 1.0	(178_)	09/98→		RUN50D	MAG50D-MAG45D	ETS50ND-ETS45ND	ETS50D3N-ETS50D4N	436210ES
SIENA 1.2	(178_)	09/98→		RUN50D	MAG50D-MAG45D	ETS50ND-ETS45ND	ETS50D3N-ETS50D4N	436210ES
SIENA 1.2	(178_)	06/02→		RUN50D	MAG50D-MAG45D	ETS50ND-ETS45ND	ETS50D3N-ETS50D4N	436210ES
SIENA 1.2	(178_)	09/01→		RUN50D	MAG50D-MAG45D	ETS50ND-ETS45ND	ETS50D3N-ETS50D4N	436210ES
SIENA 1.4	(178_)	04/96→		RUN50D	MAG50D-MAG45D	ETS50ND-ETS45ND	ETS50D3N-ETS50D4N	436210ES
SIENA 1.4 CAT	(178_)	04/96→		RUN50D	MAG50D-MAG45D	ETS50ND-ETS45ND	ETS50D3N-ETS50D4N	436210ES
SIENA 1.4	(178_)	01/07→		RUN50D	MAG50D-MAG45D	ETS50ND-ETS45ND	ETS50D3N-ETS50D4N	436210ES
SIENA 1.6 16V	(178_)	09/98→		RUN50D	MAG50D	ETS50ND	ETS50D3N-ETS50D4N	
STILO 1.2 16V (192_XA1B)	(192)	02/02→		RUN50D	MAG50D-MAG45D	ETS50ND-ETS45ND	ETS50D3N-ETS50D4N	436210ES
STILO 1.4 16V	(192)	03/05→		RUN50D	MAG50D-MAG45D	ETS50ND-ETS45ND	ETS50D3N-ETS50D4N	436210ES
STILO 1.4 16V	(192)	01/04→		RUN50D	MAG50D-MAG45D	ETS50ND-ETS45ND	ETS50D3N-ETS50D4N	436210ES
STILO 1.6 16V (192_XB1A)	(192)	10/01→		RUN50D	MAG50D-MAG45D	ETS50ND-ETS45ND	ETS50D3N-ETS50D4N	436210ES
STILO 1.6 16V	(192)	05/05→		RUN50D	MAG50D-MAG45D	ETS50ND-ETS45ND	ETS50D3N-ETS50D4N	436210ES
STILO 1.6	(192)	04/05→		RUN50D	MAG50D-MAG45D	ETS50ND-ETS45ND	ETS50D3N-ETS50D4N	436210ES
STILO 1.8 16V (192_XC1A)	(192)	10/01→		RUN62D	MAG62D	ETS62ND	ETS60D3N	438320ES
STILO 2.4 20V (192_XD1A)	(192)	10/01→		RUN62D	MAG62D	ETS62ND	ETS60D3N	438320ES
STILO 1.9 JTD (192_XF1A)	(192)	02/02→		RUN72D	MAG74D	ETS74ND	ETS70D1N-ETS74DI	476420ES
STILO 1.9 JTD (192AXS1B, 192BXS1B)	(192)	09/04→		RUN72D	MAG74D	ETS74ND	ETS70D1N-ETS74DI	476420ES
STILO 1.9 D Multijet	(192)	09/05→		RUN72D	MAG74D	ETS74ND	ETS70D1N-ETS74DI	476420ES

	Design		START	RUN	MAGIS	ETS	ETS alternative	ES
FIAT								
STILO 1.9 JTD (192_XE1A)	(192)	10/01→		RUN72D	MAG74D	ETS74ND	ETS70D1N-ETS74DI	476420ES
STILO 1.9 D Multijet	(192)	09/05→		RUN72D	MAG74D	ETS74ND	ETS70D1N-ETS74DI	476420ES
STILO 1.9 JTD	(192)	09/03→		RUN72D	MAG74D	ETS74ND	ETS70D1N-ETS74DI	476420ES
STILO 1.9 JTD	(192)	04/04→		RUN72D	MAG74D	ETS74ND	ETS70D1N-ETS74DI	476420ES
STILO 1.9 JTD	(192)	01/04→		RUN72D	MAG74D	ETS74ND	ETS70D1N-ETS74DI	476420ES
STILO 1.9 D Multijet	(192)	09/05→		RUN72D	MAG74D	ETS74ND	ETS70D1N-ETS74DI	476420ES
STILO Multi Wagon 1.4 16V	(192)	03/05→		RUN50D	MAG50D-MAG45D	ETS50ND-ETS45ND	ETS50D3N-ETS50D4N	436210ES
STILO Multi Wagon 1.4 16V	(192)	01/04→		RUN50D	MAG50D-MAG45D	ETS50ND-ETS45ND	ETS50D3N-ETS50D4N	436210ES
STILO Multi Wagon 1.6 16V	(192)	01/03→		RUN50D	MAG50D-MAG45D	ETS50ND-ETS45ND	ETS50D3N-ETS50D4N	436210ES
STILO Multi Wagon 1.8 16V	(192)	01/03→		RUN62D	MAG62D	ETS62ND	ETS60D3N	438320ES
STILO Multi Wagon 1.9 JTD	(192)	01/03→		RUN72D	MAG74D	ETS74ND	ETS70D1N-ETS74DI	476420ES
STILO Multi Wagon 1.9 D	(192)	09/04→		RUN72D	MAG74D	ETS74ND	ETS70D1N-ETS74DI	476420ES
STILO Multi Wagon 1.9 D Multijet	(192)	09/05→		RUN72D	MAG74D	ETS74ND	ETS70D1N-ETS74DI	476420ES
STILO Multi Wagon 1.9 JTD	(192)	01/03→		RUN72D	MAG74D	ETS74ND	ETS70D1N-ETS74DI	476420ES
STILO Multi Wagon 1.9 D Multijet	(192)	09/05→		RUN72D	MAG74D	ETS74ND	ETS70D1N-ETS74DI	476420ES
STILO Multi Wagon 1.9 JTD	(192)	09/03→		RUN72D	MAG74D	ETS74ND	ETS70D1N-ETS74DI	476420ES
STILO Multi Wagon 1.9 JTD	(192)	04/04→		RUN72D	MAG74D	ETS74ND	ETS70D1N-ETS74DI	476420ES
STILO Multi Wagon 1.9 JTD	(192)	01/04→		RUN72D	MAG74D	ETS74ND	ETS70D1N-ETS74DI	476420ES
STILO Multi Wagon 1.9 D Multijet	(192)	09/05→		RUN72D	MAG74D	ETS74ND	ETS70D1N-ETS74DI	476420ES
STRADA 1.2	(178E)	04/03→		RUN50D	MAG50D-MAG45D	ETS50ND-ETS45ND	ETS50D3N-ETS50D4N	436210ES
STRADA 1.2	(178E)	06/99→		RUN50D	MAG50D-MAG45D	ETS50ND-ETS45ND	ETS50D3N-ETS50D4N	436210ES
STRADA 1.3 D Multijet	(178E)	05/06→		RUN50D				
STRADA 1.7 TD	(178E)	06/99→		RUN62D	MAG62D	ETS62ND	ETS60D3N	438320ES
STRADA 1.9 D	(178E)	12/00→		RUN62D	MAG62D	ETS62ND	ETS60D3N	438320ES
STRADA 1.9 JTD	(178E)	04/03→		RUN62D	MAG62D	ETS62ND	ETS60D3N	438320ES
TEMPRA 1.4 i.e. (159.AC, 159.AX)	(159)	03/92→08/96		RUN50D	MAG50D-MAG45D	ETS50ND-ETS45ND	ETS50D3N-ETS50D4N	436210ES
TEMPRA 1.4 i.e. (159.AC)	(159)	03/91→08/96		RUN50D	MAG50D-MAG45D	ETS50ND-ETS45ND	ETS50D3N-ETS50D4N	436210ES
TEMPRA 1.6 i.e. (159.AS, 159.AT)	(159)	06/92→08/96		RUN50D	MAG50D-MAG45D	ETS50ND-ETS45ND	ETS50D3N-ETS50D4N	436210ES
TEMPRA 1.6 i.e. (159.AE)	(159)	06/90→07/92		RUN50D	MAG50D-MAG45D	ETS50ND-ETS45ND	ETS50D3N-ETS50D4N	436210ES
TEMPRA 1.6	(159)	03/90→04/93		RUN50D	MAG50D-MAG45D	ETS50ND-ETS45ND	ETS50D3N-ETS50D4N	436210ES
TEMPRA 1.6 i.e. (159.AJ)	(159)	06/94→08/96		RUN50D	MAG50D-MAG45D	ETS50ND-ETS45ND	ETS50D3N-ETS50D4N	436210ES
TEMPRA 1.6 i.e. (159.AJ)	(159)	06/94→08/96		RUN50D	MAG50D-MAG45D	ETS50ND-ETS45ND	ETS50D3N-ETS50D4N	436210ES
TEMPRA 1.8 i.e. (159.AZ)	(159)	09/93→08/96		RUN62D	MAG62D	ETS62ND	ETS60D3N	438320ES
TEMPRA 1.8 i.e. (159.BY)	(159)	10/94→08/96		RUN62D	MAG62D	ETS62ND	ETS60D3N	438320ES
TEMPRA 1.8 i.e. (159.AV)	(159)	09/93→08/96		RUN62D	MAG62D	ETS62ND	ETS60D3N	438320ES
TEMPRA 1.8 i.e. (159.AN)	(159)	03/92→08/96		RUN62D	MAG62D	ETS62ND	ETS60D3N	438320ES
TEMPRA 1.8 i.e. (159.AN)	(159)	03/90→08/96		RUN62D	MAG62D	ETS62ND	ETS60D3N	438320ES
TEMPRA 2.0 i.e. (159.AP)	(159)	10/90→08/96		RUN62D	MAG62D	ETS62ND	ETS60D3N	438320ES
TEMPRA 1.9 D (159.AG)	(159)	07/91→08/96		RUN62D	MAG62D	ETS62ND	ETS60D3N	438320ES
TEMPRA 1.9 TD (159.AQ)	(159)	07/92→08/96		RUN62D	MAG62D	ETS62ND	ETS60D3N	438320ES
TEMPRA 1.9 TD (159.CU, 159.AU, 159.AI, 159.BI)	(159)	05/90→08/96		RUN62D	MAG62D	ETS62ND	ETS60D3N	438320ES
TEMPRA S.W. 1.4 i.e. (159.AC, 159.AX)	(159)	10/92→08/96		RUN50D	MAG50D-MAG45D	ETS50ND-ETS45ND	ETS50D3N-ETS50D4N	436210ES
TEMPRA S.W. 1.4 i.e. (159.AC)	(159)	03/91→08/96		RUN50D	MAG50D-MAG45D	ETS50ND-ETS45ND	ETS50D3N-ETS50D4N	436210ES
TEMPRA S.W. 1.6 i.e. (159.AS, 159.AT)	(159)	10/92→08/96		RUN50D	MAG50D-MAG45D	ETS50ND-ETS45ND	ETS50D3N-ETS50D4N	436210ES
TEMPRA S.W. 1.6 i.e. (159.AE)	(159)	10/90→08/96		RUN50D	MAG50D-MAG45D	ETS50ND-ETS45ND	ETS50D3N-ETS50D4N	436210ES

	Design		START	RUN	MAGIS	ETS	ETS alternative	ES
FIAT								
TEMPRA S.W. 1.6	(159)	12/90→04/93		RUN50D	MAG50D-MAG45D	ETS50ND-ETS45ND	ETS50D3N-ETS50D4N	436210ES
TEMPRA S.W. 1.6 i.e. (159.AJ)	(159)	06/94→08/96		RUN50D	MAG50D-MAG45D	ETS50ND-ETS45ND	ETS50D3N-ETS50D4N	436210ES
TEMPRA S.W. 1.8 i.e. (159.AZ)	(159)	09/93→08/96		RUN62D	MAG62D	ETS62ND	ETS60D3N	438320ES
TEMPRA S.W. 1.8 i.e. (159.BY)	(159)	10/94→08/96		RUN62D	MAG62D	ETS62ND	ETS60D3N	438320ES
TEMPRA S.W. 1.8 i.e. (159.AV)	(159)	09/93→08/96		RUN62D	MAG62D	ETS62ND	ETS60D3N	438320ES
TEMPRA S.W. 1.8 i.e. (159.AN)	(159)	03/92→12/93		RUN62D	MAG62D	ETS62ND	ETS60D3N	438320ES
TEMPRA S.W. 1.8 4x4	(159)	07/92→06/93		RUN62D	MAG62D	ETS62ND	ETS60D3N	438320ES
TEMPRA S.W. 1.8 i.e. (159.AN)	(159)	03/90→08/96		RUN62D	MAG62D	ETS62ND	ETS60D3N	438320ES
TEMPRA S.W. 2.0 i.e. (159.AP)	(159)	01/91→03/95		RUN62D	MAG62D	ETS62ND	ETS60D3N	438320ES
TEMPRA S.W. 2.0 i.e. 4x4 (159.AP)	(159)	03/92→03/95		RUN62D	MAG62D	ETS62ND	ETS60D3N	438320ES
TEMPRA S.W. 1.9 D (159.AG)	(159)	07/91→08/96		RUN62D	MAG62D	ETS62ND	ETS60D3N	438320ES
TEMPRA S.W. 1.9 TD (159.AQ)	(159)	03/92→06/93		RUN62D	MAG62D	ETS62ND	ETS60D3N	438320ES
TEMPRA S.W. 1.9 TD (159.AI, 159.BI, 159.CU, 159.AU)	(159)	07/91→02/95		RUN62D	MAG62D	ETS62ND	ETS60D3N	438320ES
TIPO 1.6 i.e. (160.A1, 160.EC, 160.EB)	(160)	10/92→04/95		RUN50D	MAG50D	ETS50ND	ETS50D3N-ETS50D4N	
TIPO 1.6 i.e. (160.AF)	(160)	07/90→01/93		RUN50D	MAG50D	ETS50ND	ETS50D3N-ETS50D4N	
TIPO 1.8 i.e.	(160)	09/93→04/95		RUN50D	MAG50D	ETS50ND	ETS50D3N-ETS50D4N	
TIPO 1.8 i.e	(160)	03/93→04/95		RUN50D	MAG50D	ETS50ND	ETS50D3N-ETS50D4N	
TIPO 1.8 i.e. (160.AM)	(160)	10/94→04/95		RUN50D	MAG50D	ETS50ND	ETS50D3N-ETS50D4N	
TIPO 1.8 i.e. (160.ED)	(160)	04/93→04/95		RUN50D	MAG50D	ETS50ND	ETS50D3N-ETS50D4N	
TIPO 1.8 i.e. (160.AY)	(160)	10/90→06/93		RUN62D	MAG62D	ETS62ND	ETS60D3N	438320ES
TIPO 1.8 i.e.	(160)	10/90→06/93		RUN50D	MAG50D	ETS50ND	ETS50D3N-ETS50D4N	
TIPO 2.0 i.e. (160.AJ)	(160)	06/90→03/92		RUN62D	MAG62D	ETS62ND	ETS60D3N	438320ES
TIPO 2.0 i.e. (160.AT, 160.AJ)	(160)	03/90→04/95		RUN62D	MAG62D	ETS62ND	ETS60D3N	438320ES
TIPO 2.0 i.e. 16V Sport (160.EF)	(160)	03/93→04/95		RUN50D	MAG50D	ETS50ND	ETS50D3N-ETS50D4N	
TIPO 2.0 16V (160.AV)	(160)	07/91→04/95		RUN62D	MAG62D	ETS62ND	ETS60D3N	438320ES
TIPO 1.9 D	(160)	07/91→08/96		RUN62D	MAG62D	ETS62ND	ETS60D3N	438320ES
TIPO 2.0	(160)	10/90→10/92		RUN62D	MAG62D	ETS62ND	ETS60D3N	438320ES
TIPO 1.9 TD (160.AW)	(160)	03/92→06/93		RUN62D	MAG62D	ETS62ND	ETS60D3N	438320ES
TIPO 1.9 TD (160.EL, 160.GL, 160. AQ, 160.EI, 160.AR)	(160)	09/90→04/95		RUN62D	MAG62D	ETS62ND	ETS60D3N	438320ES
ULYSSE 1.8 (220.BB5)	(220)	05/97→08/02		RUN62D	MAG62D	ETS62ND	ETS60D3N	438320ES
ULYSSE 2.0 (220.AC5)	(220)	06/94→08/02		RUN72D	MAG74D	ETS74ND	ETS70D1N-ETS74DI	476420ES
ULYSSE 2.0 16V	(220)	05/98→09/00		RUN72D	MAG74D	ETS74ND	ETS70D1N-ETS74DI	476420ES
ULYSSE 2.0 16V	(220)	09/00→08/02		RUN72D	MAG74D	ETS74ND	ETS70D1N-ETS74DI	476420ES
ULYSSE 2.0 Turbo (220.AD5)	(220)	06/94→08/02		RUN72D	MAG74D	ETS74ND	ETS70D1N-ETS74DI	476420ES
ULYSSE 1.9 TD (220AH5)	(220)	02/95→08/02		RUN72D	MAG74D	ETS74ND	ETS70D1N-ETS74DI	476420ES
ULYSSE 2.0 JTD	(220)	10/99→08/02	AGM70D	RUN72D	MAG74D	ETS74ND	ETS70D1N-ETS74DI	476420ES
ULYSSE 2.1 TD	(220)	03/96→10/99	AGM70D	RUN72D	MAG74D	ETS74ND	ETS70D1N-ETS74DI	476420ES
ULYSSE 2.0	(179AX)	08/02→		RUN72D	MAG74D	ETS74ND	ETS70D1N-ETS74DI	476420ES
ULYSSE 3.0 V6	(179AX)	08/02→	AGM70D	RUN72D	MAG74D	ETS74ND	ETS70D1N-ETS74DI	476420ES
ULYSSE 2.0 JTD	(179AX)	05/03→		RUN72D	MAG74D	ETS74ND	ETS70D1N-ETS74DI	476420ES
ULYSSE 2.0 JTD	(179AX)	08/02→		RUN72D	MAG74D	ETS74ND	ETS70D1N-ETS74DI	476420ES
ULYSSE 2.0 D Multijet	(179AX)	05/06→		RUN72D	MAG74D	ETS74ND	ETS70D1N-ETS74DI	476420ES
ULYSSE 2.0 D Multijet	(179AX)	05/06→		RUN72D	MAG74D	ETS74ND	ETS70D1N-ETS74DI	476420ES
ULYSSE 2.2 JTD	(179AX)	08/02→	AGM70D	RUN72D	MAG74D	ETS74ND	ETS70D1N-ETS74DI	476420ES
ULYSSE 2.2 D Multijet	(179AX)	03/08→		RUN72D	MAG74D	ETS74ND	ETS70D1N-ETS74DI	476420ES

	Design		START	RUN	MAGIS	ETS	ETS alternative	ES
FIAT								
UNO 55 1.0	(146A/E)	04/94→08/00		RUN50D	MAG50D-MAG45D	ETS50ND-ETS45ND	ETS50D3N-ETS50D4N	436210ES
UNO 50 1.1	(146A/E)	01/90→12/93		RUN50D	MAG50D-MAG45D	ETS50ND-ETS45ND	ETS50D3N-ETS50D4N	436210ES
UNO 50 i.e. 1.1	(146A/E)	06/92→12/93		RUN50D	MAG50D-MAG45D	ETS50ND-ETS45ND	ETS50D3N-ETS50D4N	436210ES
UNO 1.4	(146A/E)	12/97→08/00		RUN50D	MAG50D-MAG45D	ETS50ND-ETS45ND	ETS50D3N-ETS50D4N	436210ES
UNO 1.4	(146A/E)	07/91→07/96		RUN50D	MAG50D-MAG45D	ETS50ND-ETS45ND	ETS50D3N-ETS50D4N	436210ES
UNO 1.5 75 iE	(146A/E)	01/94→10/95		RUN50D	MAG50D-MAG45D	ETS50ND-ETS45ND	ETS50D3N-ETS50D4N	436210ES
UNO 1.6 R	(146A/E)	12/92→12/95		RUN50D	MAG50D-MAG45D	ETS50ND-ETS45ND	ETS50D3N-ETS50D4N	436210ES
500 1.2	Stop/Start , A	10/07→	SST63D					
500 1.4		10/07→		RUN44D			ETS44D2N	
500 1.4 Abarth		08/08→		RUN50D	MAG50D	ETS50ND	ETS50D3N-ETS50D4N	
500 1.4 Abarth		08/08→		RUN50D				
500 1.3 D Multijet		10/07→		RUN50D	MAG50D	ETS50ND	ETS50D3N-ETS50D4N	
500 C 1.4		09/09→		RUN44D			ETS44D2N	
500 C 1.3 D Multijet		09/09→		RUN50D	MAG50D	ETS50ND	ETS50D3N-ETS50D4N	
500 C 1.3 D Multijet		09/09→		RUN50D	MAG50D	ETS50ND	ETS50D3N-ETS50D4N	
DUCATO Panorama 2.0	(290)	07/90→03/94		RUN62D	MAG62D	ETS62ND	ETS60D3N	438320ES
DUCATO Panorama 2.0 4x4	(290)	06/90→05/94		RUN72D	MAG74D	ETS74ND	ETS70D1N-ETS74DI	476420ES
DUCATO Panorama 1.9 D	(290)	07/90→03/94		RUN95D		ETS92ND-ETS95D1N		434440ES
DUCATO Panorama 1.9 TD	(290)	07/90→03/94		RUN95D		ETS92ND-ETS95D1N		434440ES
DUCATO Panorama 2.5 D	(290)	07/90→03/94		RUN95D		ETS92ND-ETS95D1N		434440ES
DUCATO Panorama 2.5 D 4x4	(290)	07/90→03/94		RUN95D		ETS92ND-ETS95D1N		434440ES
DUCATO Panorama 2.5 TD	(290)	08/90→03/94		RUN95D		ETS92ND-ETS95D1N		434440ES
DUCATO Panorama 2.5 TD 4x4	(290)	01/91→03/94		RUN95D		ETS92ND-ETS95D1N		434440ES
DUCATO Box 2.0 4x4	(290)	06/90→05/94		RUN72D	MAG74D	ETS74ND	ETS70D1N-ETS74DI	476420ES
DUCATO Box 1.9 D	(290)	07/90→03/94		RUN95D		ETS92ND-ETS95D1N		434440ES
DUCATO Box 2.5 D	(290)	06/90→05/94		RUN95D		ETS92ND-ETS95D1N		434440ES
DUCATO Box 2.5 D 4x4	(290)	07/90→03/94		RUN95D		ETS92ND-ETS95D1N		434440ES
DUCATO Box 2.5 TD	(290)	07/90→03/94		RUN95D		ETS92ND-ETS95D1N		434440ES
DUCATO Box 2.5 TD 4x4	(290)	07/90→03/94		RUN95D		ETS92ND-ETS95D1N		434440ES
DUCATO Flatbed / Chassis 2.0	(290)	07/90→03/94		RUN62D	MAG62D	ETS62ND	ETS60D3N	438320ES
DUCATO Flatbed / Chassis 2.0 4x4	(290)	06/90→05/94		RUN72D	MAG74D	ETS74ND	ETS70D1N-ETS74DI	476420ES
DUCATO Flatbed / Chassis 2.5 D	(290)	07/90→03/94		RUN95D		ETS92ND-ETS95D1N		434440ES
DUCATO Flatbed / Chassis 2.5 D 4x4	(290)	07/90→03/94		RUN95D		ETS92ND-ETS95D1N		434440ES
DUCATO Flatbed / Chassis 2.5 TD	(290)	07/90→03/94		RUN95D		ETS92ND-ETS95D1N		434440ES
DUCATO Flatbed / Chassis 2.5 TD 4x4	(290)	07/90→03/94		RUN95D		ETS92ND-ETS95D1N		434440ES
DUCATO Bus 2.0 Panorama/Combinato	(230)	03/94→04/02		RUN62D	MAG62D	ETS62ND	ETS60D3N	438320ES
DUCATO Bus 1.9 D	(230)	04/98→04/02		RUN95D		ETS92ND-ETS95D1N		434440ES
DUCATO Bus 1.9 D	(230)	05/98→11/01		RUN72D	MAG74D	ETS74ND	ETS70D1N-ETS74DI	476420ES
DUCATO Bus 1.9 TD	(230)	04/98→04/02		RUN95D		ETS92ND-ETS95D1N		434440ES
DUCATO Bus 1.9 D Combinato	(230)	06/95→04/02		RUN72D	MAG74D	ETS74ND	ETS70D1N-ETS74DI	476420ES
DUCATO Bus 1.9 TD Combinato	(230)	08/94→04/02		RUN95D		ETS92ND-ETS95D1N		434440ES
DUCATO Bus 1.9 TD Panorama/Combinato	(230)	03/94→04/02		RUN95D		ETS92ND-ETS95D1N		434440ES
DUCATO Bus 2.0 JTD	(230)	10/01→04/02		RUN95D		ETS92ND-ETS95D1N		434440ES
DUCATO Bus 2.5 TD	(230)	06/94→08/98		RUN95D		ETS92ND-ETS95D1N		434440ES
DUCATO Bus 2.5 TD 4x4	(230)	11/94→04/98		RUN95D		ETS92ND-ETS95D1N		434440ES
DUCATO Bus 2.5 TD 4x4	(230)	11/94→04/98		RUN95D		ETS92ND-ETS95D1N		434440ES
DUCATO Bus 2.5 D Combinato	(230)	08/94→04/02		RUN95D		ETS92ND-ETS95D1N		434440ES

	Design		START	RUN	MAGIS	ETS	ETS alternative	ES
FIAT								
DUCATO Bus 2.5 TDI Panorama/ Combinato	(230)	07/94→04/02		RUN95D		ETS92ND-ETS95D1N		434440ES
DUCATO Bus 2.5 TDI Combinato	(230)	08/94→04/02		RUN95D		ETS92ND-ETS95D1N		434440ES
DUCATO Bus 2.5 TDI Panorama/ Combinato	(230)	03/94→04/02		RUN95D		ETS92ND-ETS95D1N		434440ES
DUCATO Bus 2.5 TDI 4x4	(230)	04/97→04/02		RUN95D		ETS92ND-ETS95D1N		434440ES
DUCATO Bus 2.8 D	(230)	02/98→04/02		RUN95D		ETS92ND-ETS95D1N		434440ES
DUCATO Bus 2.8 TDI	(230)	10/97→04/02		RUN95D		ETS92ND-ETS95D1N		434440ES
DUCATO Bus 2.8 TDI 4x4	(230)	07/99→04/02		RUN95D		ETS92ND-ETS95D1N		434440ES
DUCATO Bus 2.8 JTD	(230)	11/00→04/02		RUN95D		ETS92ND-ETS95D1N		434440ES
DUCATO Bus 2.8 JTD 4x4	(230)	11/00→04/02		RUN95D		ETS92ND-ETS95D1N		434440ES
DUCATO Box 2.0	(230L)	03/94→04/02		RUN62D	MAG62D	ETS62ND	ETS60D3N	438320ES
DUCATO Box 1.9 D	(230L)	04/98→04/02		RUN95D		ETS92ND-ETS95D1N		434440ES
DUCATO Box 1.9 TD	(230L)	04/98→04/02		RUN95D		ETS92ND-ETS95D1N		434440ES
DUCATO Box 1.9 D	(230L)	03/94→04/02		RUN95D		ETS92ND-ETS95D1N		434440ES
DUCATO Box 1.9 TD CAT	(230L)	08/94→04/02		RUN95D		ETS92ND-ETS95D1N		434440ES
DUCATO Box 1.9 TD	(230L)	03/94→04/02		RUN95D		ETS92ND-ETS95D1N		434440ES
DUCATO Box 2.0 JTD	(230L)	10/01→04/02		RUN95D		ETS92ND-ETS95D1N		434440ES
DUCATO Box 2.5 TD 4x4	(230L)	11/94→04/98		RUN95D		ETS92ND-ETS95D1N		434440ES
DUCATO Box 2.5 D	(230L)	03/94→04/02		RUN95D		ETS92ND-ETS95D1N		434440ES
DUCATO Box 2.5 TD 4x4	(230L)	11/94→04/98		RUN95D		ETS92ND-ETS95D1N		434440ES
DUCATO Box 2.5 TDI	(230L)	03/94→04/02		RUN95D		ETS92ND-ETS95D1N		434440ES
DUCATO Box 2.5 TDI Maxi	(230L)	03/94→04/02		RUN95D		ETS92ND-ETS95D1N		434440ES
DUCATO Box 2.5 TDI 4x4	(230L)	05/98→04/02		RUN95D		ETS92ND-ETS95D1N		434440ES
DUCATO Box 2.8 JTD	(230L)	11/00→04/02		RUN95D		ETS92ND-ETS95D1N		434440ES
DUCATO Box 2.8 JTD 4x4	(230L)	11/00→04/02		RUN95D		ETS92ND-ETS95D1N		434440ES
DUCATO Box 2.8 iDTD 4x4	(230L)	05/98→09/01		RUN95D		ETS92ND-ETS95D1N		434440ES
DUCATO Box 2.8 D	(230L)	05/98→04/02		RUN95D		ETS92ND-ETS95D1N		434440ES
DUCATO Box 2.8 D 4x4	(230L)	08/98→04/02		RUN95D		ETS92ND-ETS95D1N		434440ES
DUCATO Box 2.8 TDI	(230L)	10/97→04/02		RUN95D		ETS92ND-ETS95D1N		434440ES
DUCATO Box 2.8 TDI 4x4	(230L)	06/99→04/02		RUN95D		ETS92ND-ETS95D1N		434440ES
DUCATO Flatbed / Chassis 2.0	(230)	06/98→04/02		RUN62D	MAG62D	ETS62ND	ETS60D3N	438320ES
DUCATO Flatbed / Chassis 1.9 D	(230)	04/98→04/02		RUN72D	MAG74D	ETS74ND	ETS70D1N-ETS74DI	476420ES
DUCATO Flatbed / Chassis 1.9 TD	(230)	04/98→04/02		RUN72D	MAG74D	ETS74ND	ETS70D1N-ETS74DI	476420ES
DUCATO Flatbed / Chassis 1.9 D	(230)	03/94→04/02		RUN72D	MAG74D	ETS74ND	ETS70D1N-ETS74DI	476420ES
DUCATO Flatbed / Chassis 1.9 TD CAT	(230)	08/94→04/02		RUN72D	MAG74D	ETS74ND	ETS70D1N-ETS74DI	476420ES
DUCATO Flatbed / Chassis 1.9 TD	(230)	03/94→04/02		RUN72D	MAG74D	ETS74ND	ETS70D1N-ETS74DI	476420ES
DUCATO Flatbed / Chassis 2.5 D 4x4	(230)	03/94→04/02		RUN95D		ETS92ND-ETS95D1N		434440ES
DUCATO Flatbed / Chassis 2.5 D	(230)	03/94→04/02		RUN95D		ETS92ND-ETS95D1N		434440ES
DUCATO Flatbed / Chassis 2.5 TDI	(230)	03/94→04/02		RUN95D		ETS92ND-ETS95D1N		434440ES
DUCATO Flatbed / Chassis 2.5 TDI	(230)	03/94→04/02		RUN95D		ETS92ND-ETS95D1N		434440ES
DUCATO Flatbed / Chassis 2.5 TDI 4x4	(230)	06/98→04/02		RUN95D		ETS92ND-ETS95D1N		434440ES
DUCATO Flatbed / Chassis 2.8 JTD	(230)	11/00→04/02		RUN95D		ETS92ND-ETS95D1N		434440ES
DUCATO Flatbed / Chassis 2.8 iDTD 4x4	(230)	05/98→09/01		RUN95D		ETS92ND-ETS95D1N		434440ES
DUCATO Flatbed / Chassis 2.8 D	(230)	02/98→04/02		RUN95D		ETS92ND-ETS95D1N		434440ES
DUCATO Flatbed / Chassis 2.8 TDI	(230)	12/98→04/02		RUN95D		ETS92ND-ETS95D1N		434440ES
DUCATO Bus 2.0	(244, Z_)	04/02→		RUN72D	MAG74D	ETS74ND	ETS70D1N-ETS74DI	476420ES

	Design		START	RUN	MAGIS	ETS	ETS alternative	ES
FIAT								
DUCATO Bus 2.0 Bipower	(244, Z_)	11/02→		RUN72D	MAG74D	ETS74ND	ETS70D1N-ETS74DI	476420ES
DUCATO Bus 2.0 JTD	(244, Z_)	04/02→		RUN95D		ETS92ND-ETS95D1N		434440ES
DUCATO Bus 2.3 JTD	(244, Z_)	04/02→		RUN95D		ETS92ND-ETS95D1N		434440ES
DUCATO Bus 2.8 JTD	(244, Z_)	04/02→		RUN95D		ETS92ND-ETS95D1N		434440ES
DUCATO Bus 2.8 JTD 4x4	(244, Z_)	07/02→		RUN95D		ETS92ND-ETS95D1N		434440ES
DUCATO Box 2.0	(244)	04/02→		RUN72D	MAG74D	ETS74ND	ETS70D1N-ETS74DI	476420ES
DUCATO Box 2.0 Bipower	(244)	11/02→		RUN72D	MAG74D	ETS74ND	ETS70D1N-ETS74DI	476420ES
DUCATO Box 2.0 JTD	(244)	04/02→		RUN95D		ETS92ND-ETS95D1N		434440ES
DUCATO Box 2.3 JTD	(244)	04/02→		RUN95D		ETS92ND-ETS95D1N		434440ES
DUCATO Box 2.8 JTD	(244)	04/02→		RUN95D		ETS92ND-ETS95D1N		434440ES
DUCATO Box 2.8 JTD 4x4	(244)	07/02→		RUN95D		ETS92ND-ETS95D1N		434440ES
DUCATO Box 2.8 JTD Power	(244)	05/04→		RUN95D		ETS92ND-ETS95D1N		434440ES
DUCATO Flatbed / Chassis 2.0 JTD	(244)	04/02→		RUN95D		ETS92ND-ETS95D1N		434440ES
DUCATO Flatbed / Chassis 2.3 JTD	(244)	04/02→		RUN95D		ETS92ND-ETS95D1N		434440ES
DUCATO Flatbed / Chassis 2.8 JTD	(244)	04/02→		RUN95D		ETS92ND-ETS95D1N		434440ES
DUCATO Flatbed / Chassis 2.8 JTD 4x4	(244)	10/02→		RUN95D		ETS92ND-ETS95D1N		434440ES
DUCATO Flatbed / Chassis 2.8 JTD Power	(244)	05/04→		RUN95D		ETS92ND-ETS95D1N		434440ES
DUCATO Bus 140 Natural Power 3,0		04/09→		RUN72D	MAG74D	ETS74ND	ETS70D1N-ETS74DI	476420ES
DUCATO Bus 100 Multijet 2,2 D		07/06→	AGM70D	RUN95D		ETS92ND-ETS95D1N		434440ES
DUCATO Bus 120 Multijet 2,3 D		07/06→	AGM70D	RUN95D		ETS92ND-ETS95D1N		434440ES
DUCATO Bus 160 Multijet Power 3,0 D		07/06→	AGM90D			ETS110D1N		
DUCATO Box 100 Multijet 2,2 D		07/06→	AGM70D	RUN95D		ETS92ND-ETS95D1N		434440ES
DUCATO Box 120 Multijet 2,3 D		07/06→	AGM70D	RUN95D		ETS92ND-ETS95D1N		434440ES
DUCATO Box 130 Multijet 2,3 D		01/07→	AGM70D	RUN95D		ETS92ND-ETS95D1N		434440ES
DUCATO Box 160 Multijet Power 3,0 D		07/06→				ETS110D1N		
DUCATO Flatbed / Chassis 100 Multijet 2,2 D		07/06→		RUN95D		ETS92ND-ETS95D1N		434440ES
DUCATO Flatbed / Chassis 120 Multijet 2,3 D		07/06→		RUN95D		ETS92ND-ETS95D1N		434440ES
DUCATO Flatbed / Chassis 130 Multijet 2,3 D		01/07→		RUN95D		ETS92ND-ETS95D1N		434440ES
DUCATO Flatbed / Chassis 160 Multijet Power 3,0 D		07/06→				ETS110D1N		
FORD								
COUGAR 2.0 16V	(EC_)	08/98→12/01			MAG62DB	ETS60NDB-ETS50NDB		ES60NDB
COUGAR 2.5 V6 24V	(EC_)	06/00→12/01			MAG62DB	ETS60NDB	ETS60D4N	ES60NDB
COUGAR 2.5 V6 24V	(EC_)	08/98→12/01			MAG62DB	ETS60NDB-ETS50NDB		ES60NDB
COUGAR 2.5 ST 200	(EC_)	01/00→12/01			MAG62DB	ETS60NDB	ETS60D4N	ES60NDB
ESCORT V 1.6	(GAL)	07/90→08/92			MAG44DB	ETS44NDB		ES45NDB
ESCORT V 1.6	(GAL)	07/90→12/92			MAG44DB	ETS44NDB		ES45NDB
ESCORT V 1.8 16V XR3i	(GAL)	02/92→12/92			MAG62DB	ETS60NDB-ETS50NDB		ES60NDB
ESCORT V 1.8 16V XR3i	(GAL)	02/92→12/92			MAG62DB	ETS60NDB-ETS50NDB		ES60NDB
ESCORT V RS 2000	(GAL)	05/91→12/92			MAG62DB	ETS60NDB-ETS50NDB		ES60NDB
ESCORT V 1.8 D	(GAL)	07/90→12/92			MAG62DB	ETS60NDB-ETS50NDB		ES60NDB
ESCORT V Estate 1.6	(GAL, AVL)	07/90→08/92			MAG62DB	ETS60NDB-ETS50NDB		ES60NDB
ESCORT V Estate 1.6	(GAL, AVL)	07/90→09/92			MAG62DB	ETS60NDB-ETS50NDB		ES60NDB

	Design		START	RUN	MAGIS	ETS	ETS alternative	ES
FORD								
ESCORT V Estate 1.8 16V	(GAL, AVL)	02/92→12/92			MAG62DB	ETS60NDB-ETS50NDB		ES60NDB
ESCORT V Estate 1.8 D	(GAL, AVL)	07/90→12/92			MAG72DB	ETS71NDB		
ESCORT V Estate 1.8 TD	(GAL, AVL)	05/91→12/92			MAG72DB	ETS71NDB		
ESCORT V Convertible 1.6	(ALL)	07/90→12/92			MAG62DB	ETS60NDB-ETS50NDB		ES60NDB
ESCORT V Convertible 1.8 16V XR3i	(ALL)	02/92→12/92			MAG62DB	ETS60NDB-ETS50NDB		ES60NDB
ESCORT V Convertible 1.8 16V XR3i	(ALL)	02/92→12/92			MAG62DB	ETS60NDB-ETS50NDB		ES60NDB
ESCORT VI 1.6 i 16V	(GAL)	01/94→01/95			MAG62DB	ETS60NDB-ETS50NDB		ES60NDB
ESCORT VI 1.6 i 16V	(GAL)	09/92→01/95			MAG62DB	ETS60NDB-ETS50NDB		ES60NDB
ESCORT VI 1.8 i 16V	(GAL)	09/92→01/95			MAG62DB	ETS60NDB-ETS50NDB		ES60NDB
ESCORT VI 1.8 XR3i 16V 4x4	(GAL)	08/93→01/95			MAG62DB	ETS60NDB-ETS50NDB		ES60NDB
ESCORT VI 1.8 16V XR3i	(GAL)	09/92→01/95			MAG62DB	ETS60NDB-ETS50NDB		ES60NDB
ESCORT VI 1.8 XR3i 16V 4x4	(GAL)	08/93→01/95			MAG62DB	ETS60NDB-ETS50NDB		ES60NDB
ESCORT VI RS 2000	(GAL)	09/92→01/95			MAG62DB	ETS60NDB-ETS50NDB		ES60NDB
ESCORT VI RS 2000 4x4	(GAL)	08/93→01/95			MAG62DB	ETS60NDB-ETS50NDB		ES60NDB
ESCORT VI RS Cosworth 4x4	(GAL)	09/92→01/95			MAG62DB	ETS60NDB-ETS50NDB		ES60NDB
ESCORT VI 1.8 D	(GAL)	09/92→01/95			MAG72DB	ETS71NDB		
ESCORT VI 1.8 TD	(GAL)	02/93→01/95			MAG72DB	ETS71NDB		
ESCORT VI Saloon 1.3	(GAL)	08/93→01/95			MAG44DB	ETS44NDB		ES45NDB
ESCORT VI Saloon 1.4	(GAL)	08/93→04/94			MAG44DB	ETS44NDB		ES45NDB
ESCORT VI Saloon 1.4	(GAL)	08/93→01/95			MAG44DB	ETS44NDB		ES45NDB
ESCORT VI Saloon 1.6 i 16V	(GAL)	01/94→01/95			MAG62DB	ETS60NDB-ETS50NDB		ES60NDB
ESCORT VI Saloon 1.6 i 16V	(GAL)	08/93→01/95			MAG62DB	ETS60NDB-ETS50NDB		ES60NDB
ESCORT VI Saloon 1.8 i 16V	(GAL)	08/93→01/95			MAG62DB	ETS60NDB-ETS50NDB		ES60NDB
ESCORT VI Saloon 1.8 D	(GAL)	08/93→01/95			MAG72DB	ETS71NDB		
ESCORT VI Saloon 1.8 TD	(GAL)	08/93→01/95			MAG72DB	ETS71NDB		
ESCORT VI Estate 1.3	(GAL)	09/92→01/95			MAG44DB	ETS44NDB		ES45NDB
ESCORT VI Estate 1.4	(GAL)	09/92→01/94			MAG44DB	ETS44NDB		ES45NDB
ESCORT VI Estate 1.4	(GAL)	01/94→01/95			MAG44DB	ETS44NDB		ES45NDB
ESCORT VI Estate 1.6 i 16V	(GAL)	01/94→01/95			MAG62DB	ETS60NDB-ETS50NDB		ES60NDB
ESCORT VI Estate 1.6 i 16V	(GAL)	09/92→01/95			MAG62DB	ETS60NDB-ETS50NDB		ES60NDB
ESCORT VI Estate 1.8 i 16V	(GAL)	01/93→01/95			MAG62DB	ETS60NDB-ETS50NDB		ES60NDB
ESCORT VI Estate 1.8 i 16V	(GAL)	02/93→01/95			MAG62DB	ETS60NDB-ETS50NDB		ES60NDB
ESCORT VI Estate 1.8 D	(GAL)	09/92→01/95			MAG72DB	ETS71NDB		
ESCORT VI Estate 1.8 TD	(GAL)	02/93→01/95			MAG72DB	ETS71NDB		
ESCORT VI Convertible 1.4	(ALL)	12/92→04/94			MAG44DB	ETS44NDB		ES45NDB
ESCORT VI Convertible 1.4 i	(ALL)	07/93→01/95			MAG44DB	ETS44NDB		ES45NDB
ESCORT VI Convertible 1.6 i 16V	(ALL)	02/94→01/95			MAG62DB	ETS60NDB-ETS50NDB		ES60NDB
ESCORT VI Convertible 1.6 16V XR3i	(ALL)	12/92→01/95			MAG62DB	ETS60NDB-ETS50NDB		ES60NDB
ESCORT VI Convertible 1.8 16V XR3i	(ALL)	12/92→01/95			MAG62DB	ETS60NDB-ETS50NDB		ES60NDB
ESCORT VI Convertible 1.8 16V XR3i	(ALL)	12/92→01/95			MAG62DB	ETS60NDB-ETS50NDB		ES60NDB
ESCORT VII 1.3	(GAL, AAL, ABL)	01/95→10/98			MAG44DB	ETS44NDB		ES45NDB
ESCORT VII 1.6 i 16V	(GAL, AAL, ABL)	01/95→08/95			MAG62DB	ETS60NDB	ETS60D4N	ES60NDB
ESCORT VII 1.6 16V	(GAL, AAL, ABL)	01/95→10/98			MAG62DB	ETS60NDB	ETS60D4N	ES60NDB
ESCORT VII 1.6 16V 4x4	(GAL, AAL, ABL)	01/95→10/98			MAG62DB	ETS60NDB	ETS60D4N	ES60NDB
ESCORT VII 1.8 16V	(GAL, AAL, ABL)	01/95→08/95			MAG62DB	ETS60NDB	ETS60D4N	ES60NDB
ESCORT VII 1.8 16V	(GAL, AAL, ABL)	01/95→10/98			MAG62DB	ETS60NDB	ETS60D4N	ES60NDB
ESCORT VII RS 2000	(GAL, AAL, ABL)	02/95→02/98			MAG62DB	ETS60NDB	ETS60D4N	ES60NDB

	Design		START	RUN	MAGIS	ETS	ETS alternative	ES
FORD								
ESCORT VII RS 2000 4x4	(GAL, AAL, ABL)	02/95→10/98			MAG62DB	ETS60NDB	ETS60D4N	ES60NDB
ESCORT VII RS Cosworth 4x4	(GAL, AAL, ABL)	02/95→10/98			MAG62DB	ETS60NDB	ETS60D4N	ES60NDB
ESCORT VII 1.8 D	(GAL, AAL, ABL)	01/95→12/96			MAG62DB	ETS60NDB	ETS60D4N	ES60NDB
ESCORT VII 1.8 Turbo D	(GAL, AAL, ABL)	12/95→10/98			MAG62DB	ETS60NDB	ETS60D4N	ES60NDB
ESCORT VII 1.8 TD	(GAL, AAL, ABL)	01/95→10/98			MAG62DB	ETS60NDB	ETS60D4N	ES60NDB
ESCORT VII Saloon 1.3	(GAL, AFL)	01/95→02/99			MAG44DB	ETS44NDB		ES45NDB
ESCORT VII Saloon 1.6 i 16V	(GAL, AFL)	01/95→08/95			MAG62DB	ETS60NDB	ETS60D4N	ES60NDB
ESCORT VII Saloon 1.6 i 16V	(GAL, AFL)	01/95→02/99			MAG62DB	ETS60NDB	ETS60D4N	ES60NDB
ESCORT VII Saloon 1.8 16V	(GAL, AFL)	01/95→08/95			MAG62DB	ETS60NDB	ETS60D4N	ES60NDB
ESCORT VII Saloon 1.8 16V	(GAL, AFL)	01/95→02/99			MAG62DB	ETS60NDB	ETS60D4N	ES60NDB
ESCORT VII Saloon 1.8 D	(GAL, AFL)	01/95→12/96			MAG62DB	ETS60NDB	ETS60D4N	ES60NDB
ESCORT VII Saloon 1.8 Turbo D	(GAL, AFL)	12/95→02/99			MAG62DB	ETS60NDB	ETS60D4N	ES60NDB
ESCORT VII Saloon 1.8 TD	(GAL, AFL)	01/95→10/98			MAG62DB	ETS60NDB	ETS60D4N	ES60NDB
ESCORT VII Estate 1.3	(GAL, ANL)	01/95→10/98			MAG44DB	ETS44NDB		ES45NDB
ESCORT VII Estate 1.6 i 16V	(GAL, ANL)	01/95→08/95			MAG62DB	ETS60NDB	ETS60D4N	ES60NDB
ESCORT VII Estate 1.6 16V	(GAL, ANL)	01/95→02/99			MAG62DB	ETS60NDB	ETS60D4N	ES60NDB
ESCORT VII Estate 1.8 16V	(GAL, ANL)	01/95→08/95			MAG62DB	ETS60NDB	ETS60D4N	ES60NDB
ESCORT VII Estate 1.8 16V	(GAL, ANL)	01/95→02/99			MAG62DB	ETS60NDB	ETS60D4N	ES60NDB
ESCORT VII Estate 1.8 D	(GAL, ANL)	01/95→02/99			MAG62DB	ETS60NDB	ETS60D4N	ES60NDB
ESCORT VII Estate 1.8 Turbo D	(GAL, ANL)	12/95→02/99			MAG62DB	ETS60NDB	ETS60D4N	ES60NDB
ESCORT VII Estate 1.8 TD	(GAL, ANL)	01/95→02/99			MAG62DB	ETS60NDB	ETS60D4N	ES60NDB
ESCORT VII Convertible 1.6 16V XR3i	(ALL)	02/95→12/96			MAG62DB	ETS60NDB	ETS60D4N	ES60NDB
ESCORT VII Convertible 1.6 16V XR3i	(ALL)	02/95→09/99			MAG62DB	ETS60NDB	ETS60D4N	ES60NDB
ESCORT VII Convertible 1.8 16V XR3i	(ALL)	02/95→08/98			MAG62DB	ETS60NDB	ETS60D4N	ES60NDB
ESCORT VII Convertible 1.8 16V XR3i	(ALL)	10/95→08/98			MAG62DB	ETS60NDB	ETS60D4N	ES60NDB
ESCORT VII Convertible 1.8 16V XR3i	(ALL)	02/95→08/00			MAG62DB	ETS60NDB	ETS60D4N	ES60NDB
ESCORT VII Convertible 1.8 Turbo D	(ALL)	10/96→08/99			MAG62DB	ETS60NDB	ETS60D4N	ES60NDB
ESCORT VII Convertible 1.8 TD	(ALL)	09/95→08/98			MAG62DB	ETS60NDB	ETS60D4N	ES60NDB
ESCORT CLASSIC 1.6 16V	(AAL, ABL)	10/98→07/00			MAG62DB	ETS60NDB	ETS60D4N	ES60NDB
ESCORT CLASSIC 1.8 TD	(AAL, ABL)	10/98→07/00			MAG62DB	ETS60NDB-ETS50NDB		ES60NDB
ESCORT CLASSIC Turnier 1.6 16V	(ANL)	02/99→07/00			MAG62DB	ETS60NDB	ETS60D4N	ES60NDB
ESCORT CLASSIC Turnier 1.8 TD	(ANL)	02/99→07/00			MAG62DB	ETS60NDB-ETS50NDB		ES60NDB
ESCORT '91 Express 1.3	(AVL)	07/90→12/94			MAG44DB	ETS44NDB		ES45NDB
ESCORT '91 Express 1.4	(AVL)	07/90→12/94			MAG44DB	ETS44NDB		ES45NDB
ESCORT '91 Express 1.8 D	(AVL)	07/90→12/94			MAG62DB	ETS60NDB-ETS50NDB		ES60NDB
ESCORT '95 Box 1.4	(AVL)	01/95→			MAG44DB	ETS44NDB		ES45NDB
ESCORT '95 Box 1.8 D	(AVL)	01/95→			MAG62DB	ETS60NDB-ETS50NDB		ES60NDB
ESCORT '95 Box 1.8 Turbo D	(AVL)	12/95→06/01			MAG62DB	ETS60NDB-ETS50NDB		ES60NDB
FIESTA III 1.3 CAT	(GFJ)	05/91→01/97			MAG44DB	ETS44NDB		ES45NDB
FIESTA III 1.6 i 16V	(GFJ)	01/94→12/95			MAG44DB	ETS44NDB		ES45NDB
FIESTA III 1.6 Turbo (FBJT)	(GFJ)	03/90→10/92			MAG44DB	ETS44NDB		ES45NDB
FIESTA III 1.8 16V	(GFJ)	02/92→12/95			MAG62DB	ETS60NDB	ETS60D4N	ES60NDB
FIESTA III 1.8 XR2i 16V	(GFJ)	02/92→12/95			MAG62DB	ETS60NDB	ETS60D4N	ES60NDB
FIESTA III 1.8 TD	(GFJ)	03/93→12/95			MAG62DB	ETS60NDB	ETS60D4N	ES60NDB
FIESTA IV 1.0 i	(JA_, JB_)	02/97→09/99			MAG44DB	ETS44NDB		ES45NDB
FIESTA IV 1.0 i	(JA_, JB_)	09/99→01/02			MAG44DB	ETS44NDB		ES45NDB
FIESTA IV 1.25 i 16V	(JA_, JB_)	08/95→01/02			MAG44DB	ETS44NDB		ES45NDB

	Design		START	RUN	MAGIS	ETS	ETS alternative	ES
FORD								
FIESTA IV 1.3 i	(JA_, JB_)	08/95→01/02			MAG44DB	ETS44NDB		ES45NDB
FIESTA IV 1.3 i	(JA_, JB_)	08/95→01/02			MAG44DB	ETS44NDB		ES45NDB
FIESTA IV 1.8 D	(JA_, JB_)	08/95→04/00			MAG62DB	ETS60NDB-ETS50NDB		ES60NDB
FIESTA IV 1.8 DI	(JA_, JB_)	04/00→01/02			MAG62DB	ETS60NDB	ETS60D4N	ES60NDB
FIESTA V ST150	(JH_, JD_)	03/05→			MAG62DB	ETS60NDB	ETS60D4N	ES60NDB
FIESTA V 1.4 TDCi	(JH_, JD_)	11/01→			MAG62DB	ETS60NDB-ETS50NDB		ES60NDB
FIESTA V 1.6 TDCi	(JH_, JD_)	11/04→			MAG62DB	ETS60NDB-ETS50NDB		ES60NDB
FIESTA VI 1.6 Ti		10/08→			MAG62DB	ETS60NDB	ETS60D4N	ES60NDB
FIESTA VI 1.4 TDCi		01/09→			MAG62DB	ETS60NDB	ETS60D4N	ES60NDB
FIESTA VI 1.6 TDCi		10/08→			MAG72DB	ETS71NDB		
FIESTA VI 1.6 TDCi		10/08→			MAG72DB	ETS71NDB		
FIESTA VI 1.6 TDCi		02/10→			MAG62DB	ETS60NDB	ETS60D4N	ES60NDB
FIESTA Box 1.3	(FVD)	04/91→08/95			MAG44DB	ETS44NDB		ES45NDB
FIESTA Box 1.8 TD	(FVD)	07/93→08/95			MAG62DB	ETS60NDB	ETS60D4N	ES60NDB
FIESTA Box 1.3	(F3L, F5L)	09/91→02/96			MAG44DB	ETS44NDB		ES45NDB
FIESTA Box 1.8 D	(F3L, F5L)	09/91→02/96			MAG62DB	ETS60NDB	ETS60D4N	ES60NDB
FIESTA Box 1.8 TD	(F3L, F5L)	07/93→08/95			MAG62DB	ETS60NDB	ETS60D4N	ES60NDB
FIESTA Box 1.3	(J5_, J3_)	02/96→			MAG44DB	ETS44NDB		ES45NDB
FIESTA Box 1.8 D	(J5_, J3_)	02/96→			MAG62DB	ETS60NDB-ETS50NDB		ES60NDB
FIESTA Box 1.8 DI	(J5_, J3_)	09/00→			MAG62DB	ETS60NDB-ETS50NDB		ES60NDB
FIESTA Box D 1.8	(JV_)	05/98→			MAG62DB	ETS60NDB	ETS60D4N	ES60NDB
FIESTA Box TD 1.8	(JV_)	03/00→			MAG62DB	ETS60NDB	ETS60D4N	ES60NDB
FIESTA Van 1.4 TDCi		10/03→			MAG62DB	ETS60NDB	ETS60D4N	ES60NDB
FIESTA Van 1.4 TDCi		01/09→			MAG62DB	ETS60NDB	ETS60D4N	ES60NDB
FIESTA Van 1.6 TDCi		01/09→			MAG62DB	ETS60NDB	ETS60D4N	ES60NDB
FOCUS 1.4 16V	(DAW, DBW)	10/98→11/04			MAG44DB	ETS44NDB		ES45NDB
FOCUS 1.6 16V	(DAW, DBW)	10/98→11/04			MAG44DB	ETS44NDB		ES45NDB
FOCUS 1.8 16V	(DAW, DBW)	10/98→11/04			MAG62DB	ETS60NDB	ETS60D4N	ES60NDB
FOCUS 2.0 16V	(DAW, DBW)	10/98→11/04			MAG62DB	ETS60NDB	ETS60D4N	ES60NDB
FOCUS ST170	(DAW, DBW)	03/02→11/04			MAG62DB	ETS60NDB-ETS50NDB		ES60NDB
FOCUS RS	(DAW, DBW)	10/02→11/04			MAG62DB	ETS60NDB-ETS50NDB		ES60NDB
FOCUS 1.8 DI / TDDi	(DAW, DBW)	08/99→11/04			MAG72DB	ETS71NDB		
FOCUS 1.8 Turbo DI / TDDi	(DAW, DBW)	10/98→11/04			MAG72DB	ETS71NDB		
FOCUS 1.8 TDCi	(DAW, DBW)	09/02→11/04			MAG72DB	ETS71NDB		
FOCUS 1.8 TDCi	(DAW, DBW)	03/01→11/04			MAG72DB	ETS71NDB		
FOCUS Saloon 1.4 16V	(DFW)	02/99→11/04			MAG44DB	ETS44NDB		ES45NDB
FOCUS Saloon 1.6 16V	(DFW)	02/99→11/04			MAG44DB	ETS44NDB		ES45NDB
FOCUS Saloon 1.8 16V	(DFW)	02/99→11/04			MAG62DB	ETS60NDB	ETS60D4N	ES60NDB
FOCUS Saloon 2.0 16V	(DFW)	02/99→11/04			MAG62DB	ETS60NDB	ETS60D4N	ES60NDB
FOCUS Saloon 1.8 TDdi	(DFW)	08/01→03/05			MAG72DB	ETS71NDB		
FOCUS Saloon 1.8 Turbo DI / TDDi	(DFW)	02/99→11/04			MAG72DB	ETS71NDB		
FOCUS Saloon 1.8 TDCi	(DFW)	09/02→11/04			MAG72DB	ETS71NDB		
FOCUS Saloon 1.8 TDCi	(DFW)	03/01→11/04			MAG72DB	ETS71NDB		
FOCUS Estate 1.4 16V	(DNW)	02/99→11/04			MAG44DB	ETS44NDB		ES45NDB
FOCUS Estate 1.6 16V	(DNW)	02/99→11/04			MAG44DB	ETS44NDB		ES45NDB
FOCUS Estate 1.8 16V	(DNW)	02/99→11/04			MAG62DB	ETS60NDB	ETS60D4N	ES60NDB
FOCUS Estate 2.0 16V	(DNW)	02/99→11/04			MAG62DB	ETS60NDB	ETS60D4N	ES60NDB

	Design		START	RUN	MAGIS	ETS	ETS alternative	ES
FORD								
FOCUS Estate ST170	(DNW)	09/02→11/04			MAG62DB	ETS60NDB-ETS50NDB		ES60NDB
FOCUS Estate 1.8 DI / TDDi	(DNW)	08/99→11/04			MAG72DB	ETS71NDB		
FOCUS Estate 1.8 BiFuel	(DNW)	02/03→01/05			MAG62DB	ETS60NDB	ETS60D4N	ES60NDB
FOCUS Estate 1.8 Turbo DI / TDDi	(DNW)	02/99→11/04			MAG72DB	ETS71NDB		
FOCUS Estate 1.8 TDCi	(DNW)	09/02→11/04			MAG72DB	ETS71NDB		
FOCUS Estate 1.8 TDCi	(DNW)	03/01→11/04			MAG72DB	ETS71NDB		
FOCUS C-MAX 1.8		10/03→03/07			MAG62DB	ETS60NDB	ETS60D4N	ES60NDB
FOCUS C-MAX 1.8		04/04→03/07			MAG62DB	ETS60NDB-ETS50NDB		ES60NDB
FOCUS C-MAX 1.8 Flexifuel		01/06→03/07			MAG62DB	ETS60NDB	ETS60D4N	ES60NDB
FOCUS C-MAX 2.0		04/04→03/07			MAG62DB	ETS60NDB-ETS50NDB		ES60NDB
C-MAX 1.6		02/07→			MAG62DB	ETS60NDB	ETS60D4N	ES60NDB
C-MAX 1.8		02/07→			MAG62DB	ETS60NDB	ETS60D4N	ES60NDB
C-MAX 1.8 Flexifuel		02/07→			MAG62DB	ETS60NDB	ETS60D4N	ES60NDB
C-MAX 2.0		02/07→			MAG62DB	ETS60NDB	ETS60D4N	ES60NDB
C-MAX 2.0 LPG		06/08→			MAG62DB	ETS60NDB	ETS60D4N	ES60NDB
C-MAX 2.0 CNG		04/09→			MAG62DB	ETS60NDB	ETS60D4N	ES60NDB
C-MAX 1.6 TDCi		02/07→			MAG72DB	ETS71NDB		
C-MAX 1.6 TDCi		02/07→			MAG72DB	ETS71NDB		
C-MAX 1.8 TDCi		02/07→			MAG72DB	ETS71NDB		
C-MAX 2.0 TDCi		02/08→			MAG72DB	ETS71NDB		
C-MAX 2.0 TDCi		02/07→			MAG72DB	ETS71NDB		
FOCUS II 1.8	(DA_)	03/06→			MAG62DB	ETS60NDB	ETS60D4N	ES60NDB
FOCUS II 1.8 Flexifuel	(DA_)	01/06→			MAG62DB	ETS60NDB	ETS60D4N	ES60NDB
FOCUS II 1.8 Flexifuel	(DA_)	12/05→			MAG62DB	ETS60NDB	ETS60D4N	ES60NDB
FOCUS II 2.0	(DA_)	11/04→			MAG62DB	ETS60NDB	ETS60D4N	ES60NDB
FOCUS II 2.0 LPG	(DA_)	06/08→			MAG62DB	ETS60NDB	ETS60D4N	ES60NDB
FOCUS II 2.0 CNG	(DA_)	04/09→			MAG62DB	ETS60NDB	ETS60D4N	ES60NDB
FOCUS II 2.5 ST	(DA_)	10/05→			MAG72DB	ETS71NDB		
FOCUS II 2.5 RS	(DA_)	01/09→			MAG72DB	ETS71NDB		
FOCUS II 1.6 TDCi	(DA_)	01/05→			MAG72DB	ETS71NDB		
FOCUS II 1.6 TDCi	(DA_)	11/04→			MAG72DB	ETS71NDB		
FOCUS II 1.8 TDCi	(DA_)	01/05→			MAG72DB	ETS71NDB		
FOCUS II 2.0 TDCi	(DA_)	02/08→			MAG72DB	ETS71NDB		
FOCUS II 2.0 TDCi	(DA_)	11/04→			MAG72DB	ETS71NDB		
FOCUS II Saloon 1.6 Ti	(DA_)	04/05→			MAG72DB	ETS71NDB		
FOCUS II Saloon 1.8	(DA_)	03/06→			MAG62DB	ETS60NDB	ETS60D4N	ES60NDB
FOCUS II Saloon 1.8 Flexifuel	(DA_)	06/06→			MAG62DB	ETS60NDB	ETS60D4N	ES60NDB
FOCUS II Saloon 1.8 Flexifuel	(DA_)	12/05→			MAG62DB	ETS60NDB	ETS60D4N	ES60NDB
FOCUS II Saloon 2.0	(DA_)	04/05→			MAG62DB	ETS60NDB	ETS60D4N	ES60NDB
FOCUS II Saloon 1.6 TDCi	(DA_)	04/05→			MAG72DB	ETS71NDB		
FOCUS II Saloon 1.6 TDCi	(DA_)	04/05→			MAG72DB	ETS71NDB		
FOCUS II Saloon 1.8 TDCi	(DA_)	04/05→			MAG72DB	ETS71NDB		
FOCUS II Saloon 2.0 TDCi	(DA_)	02/08→			MAG72DB	ETS71NDB		
FOCUS II Saloon 2.0 TDCi	(DA_)	04/05→			MAG72DB	ETS71NDB		
FOCUS II Turnier 1.6 Ti	(DAW_)	11/04→			MAG62DB	ETS60NDB	ETS60D4N	ES60NDB
FOCUS II Turnier 1.8	(DAW_)	03/06→			MAG62DB	ETS60NDB	ETS60D4N	ES60NDB
FOCUS II Turnier 1.8 Flexifuel	(DAW_)	01/06→			MAG62DB	ETS60NDB	ETS60D4N	ES60NDB

	Design		START	RUN	MAGIS	ETS	ETS alternative	ES
FORD								
FOCUS II Turnier 1.8 Flexifuel	(DAW_)	12/05→			MAG62DB	ETS60NDB	ETS60D4N	ES60NDB
FOCUS II Turnier 2.0	(DAW_)	11/04→			MAG62DB	ETS60NDB	ETS60D4N	ES60NDB
FOCUS II Turnier 2.0 LPG	(DAW_)	06/08→			MAG62DB	ETS60NDB	ETS60D4N	ES60NDB
FOCUS II Turnier 1.6 TDCi	(DAW_)	11/04→			MAG72DB	ETS71NDB		
FOCUS II Turnier 1.6 TDCi	(DAW_)	11/04→			MAG72DB	ETS71NDB		
FOCUS II Turnier 1.8 TDCi	(DAW_)	11/04→			MAG72DB	ETS71NDB		
FOCUS II Turnier 2.0 TDCi	(DAW_)	02/08→			MAG72DB	ETS71NDB		
FOCUS II Turnier 2.0 TDCi	(DAW_)	11/04→			MAG72DB	ETS71NDB		
FOCUS II Convertible 2.0		10/06→			MAG62DB	ETS60NDB	ETS60D4N	ES60NDB
FOCUS II Convertible 2.0 TDCi		10/06→			MAG72DB	ETS71NDB		
FUSION 1.4 TDCi	(JU_)	08/02→			MAG72DB	ETS71NDB		
FUSION 1.6 TDCi	(JU_)	11/04→			MAG72DB	ETS71NDB		
GALAXY 2.0 i	(WGR)	11/95→05/06			MAG62DB	ETS60NDB	ETS60D4N	ES60NDB
GALAXY 2.3 16V	(WGR)	09/01→05/06			MAG62DB	ETS60NDB	ETS60D4N	ES60NDB
GALAXY 2.3 16V	(WGR)	01/97→05/06			MAG62DB	ETS60NDB	ETS60D4N	ES60NDB
GALAXY 2.8 i V6	(WGR)	11/95→04/00			MAG72DB	ETS71NDB		
GALAXY 2.8 i V6 4x4	(WGR)	04/96→04/00			MAG72DB	ETS71NDB		
GALAXY 2.8 V6	(WGR)	04/00→05/06			MAG72DB	ETS71NDB		
GALAXY 1.9 TDI	(WGR)	03/95→05/06		RUN95D				
GALAXY 1.9 TDI	(WGR)	08/97→04/00		RUN95D		ETS92ND-ETS95D1N		434440ES
GALAXY 1.9 TDI	(WGR)	04/00→05/06		RUN95D		ETS92ND-ETS95D1N		434440ES
GALAXY 1.9 TDI	(WGR)	02/03→05/06		RUN95D		ETS92ND-ETS95D1N		434440ES
GALAXY 1.9 TDI	(WGR)	05/05→05/06		RUN95D		ETS92ND-ETS95D1N		434440ES
GALAXY 2.0		05/06→			MAG72DB	ETS71NDB		
GALAXY 2.0 SCTi		03/10→			MAG72DB	ETS71NDB		
GALAXY 2.3		07/07→			MAG72DB	ETS71NDB		
KA 1.0 i	(RB_)	07/97→09/99			MAG44DB	ETS44NDB		ES45NDB
KA 1.0 i	(RB_)	09/99→11/08			MAG44DB	ETS44NDB		ES45NDB
KA 1.3 i	(RB_)	06/98→11/08			MAG44DB	ETS44NDB		ES45NDB
KA 1.3 i	(RB_)	09/96→10/02			MAG44DB	ETS44NDB		ES45NDB
KA 1.3 i	(RB_)	09/96→11/08			MAG44DB	ETS44NDB		ES45NDB
KA 1.3 TDCi		02/09→			MAG62DB	ETS60NDB	ETS60D4N	ES60NDB
KUGA 2.5 4x4		03/09→			MAG72DB	ETS71NDB		
KUGA 2.0 TDCi		03/08→			MAG72DB	ETS71NDB		
KUGA 2.0 TDCi 4x4		03/08→			MAG72DB	ETS71NDB		
KUGA 2.0 TDCi		03/10→			MAG72DB	ETS71NDB		
KUGA 2.0 TDCi 4x4		03/10→			MAG72DB	ETS71NDB		
KUGA 2.0 TDCi 4x4		03/10→			MAG72DB	ETS71NDB		
MAVERICK 2.7 TD	01-94	04-98→						ES100720S
MONDEO I 1.6 i 16V	(GBP)	07/94→08/96			MAG62DB	ETS60NDB	ETS60D4N	ES60NDB
MONDEO I 1.6 i 16V	(GBP)	02/93→08/96			MAG62DB	ETS60NDB	ETS60D4N	ES60NDB
MONDEO I 1.8 i 16V	(GBP)	07/94→08/96			MAG62DB	ETS60NDB	ETS60D4N	ES60NDB
MONDEO I 1.8 i 16V	(GBP)	02/93→08/96			MAG62DB	ETS60NDB	ETS60D4N	ES60NDB
MONDEO I 1.8 i 16V 4x4	(GBP)	02/93→08/96			MAG62DB	ETS60NDB	ETS60D4N	ES60NDB
MONDEO I 2.0 i 16V	(GBP)	12/94→08/96			MAG62DB	ETS60NDB	ETS60D4N	ES60NDB
MONDEO I 2.0 i 16V 4x4	(GBP)	12/94→08/96			MAG62DB	ETS60NDB	ETS60D4N	ES60NDB
MONDEO I 2.0 i 16V	(GBP)	02/93→08/96			MAG62DB	ETS60NDB	ETS60D4N	ES60NDB

	Design		START	RUN	MAGIS	ETS	ETS alternative	ES
FORD								
MONDEO I 2.5 i 24V	(GBP)	07/94→08/96			MAG72DB	ETS71NDB-ETS65NDB		ES70NDB
MONDEO I 1.8 TD	(GBP)	06/93→08/96			MAG62DB	ETS60NDB-ETS50NDB		ES60NDB
MONDEO I 1.8 TD	(GBP)	10/95→08/96			MAG62DB	ETS60NDB	ETS60D4N	ES60NDB
MONDEO I Saloon 1.6 i 16V	(GBP)	07/94→08/96			MAG62DB	ETS60NDB	ETS60D4N	ES60NDB
MONDEO I Saloon 1.6 i 16V	(GBP)	02/93→08/96			MAG62DB	ETS60NDB	ETS60D4N	ES60NDB
MONDEO I Saloon 1.8 i 16V	(GBP)	01/94→08/96			MAG62DB	ETS60NDB	ETS60D4N	ES60NDB
MONDEO I Saloon 1.8 i 16V	(GBP)	02/93→08/96			MAG62DB	ETS60NDB	ETS60D4N	ES60NDB
MONDEO I Saloon 2.0 i 16V 4x4	(GBP)	12/94→08/96			MAG62DB	ETS60NDB	ETS60D4N	ES60NDB
MONDEO I Saloon 2.0 i 16V	(GBP)	02/93→08/96			MAG62DB	ETS60NDB	ETS60D4N	ES60NDB
MONDEO I Saloon 2.5 i 24V	(GBP)	07/94→08/96			MAG72DB	ETS71NDB-ETS65NDB		ES70NDB
MONDEO I Saloon 1.8 TD	(GBP)	06/93→08/96			MAG62DB	ETS60NDB	ETS60D4N	ES60NDB
MONDEO I Saloon 1.8 TD	(GBP)	10/95→08/96			MAG62DB	ETS60NDB	ETS60D4N	ES60NDB
MONDEO I Estate 1.6 i 16V	(BNP)	07/94→08/96			MAG62DB	ETS60NDB	ETS60D4N	ES60NDB
MONDEO I Estate 1.6 i 16V	(BNP)	04/93→08/96			MAG62DB	ETS60NDB	ETS60D4N	ES60NDB
MONDEO I Estate 1.8 i 16V	(BNP)	07/94→08/96			MAG62DB	ETS60NDB	ETS60D4N	ES60NDB
MONDEO I Estate 1.8 i 16V	(BNP)	04/93→08/96			MAG62DB	ETS60NDB	ETS60D4N	ES60NDB
MONDEO I Estate 1.8 i 16V 4x4	(BNP)	04/93→08/96			MAG62DB	ETS60NDB	ETS60D4N	ES60NDB
MONDEO I Estate 2.0 i 16V	(BNP)	01/93→08/96			MAG62DB	ETS60NDB	ETS60D4N	ES60NDB
MONDEO I Estate 2.0 i 16V 4x4	(BNP)	12/94→08/96			MAG62DB	ETS60NDB	ETS60D4N	ES60NDB
MONDEO I Estate 2.0 i 16V	(BNP)	04/93→08/96			MAG62DB	ETS60NDB	ETS60D4N	ES60NDB
MONDEO I Estate 2.0 i 16V 4x4	(BNP)	04/93→08/96			MAG62DB	ETS60NDB	ETS60D4N	ES60NDB
MONDEO I Estate 2.5 i 24V	(BNP)	07/94→08/96			MAG72DB	ETS71NDB-ETS65NDB		ES70NDB
MONDEO I Estate 1.8 TD	(BNP)	06/93→08/96			MAG62DB	ETS60NDB	ETS60D4N	ES60NDB
MONDEO I Estate 1.8 TD	(BNP)	11/95→08/96			MAG62DB	ETS60NDB	ETS60D4N	ES60NDB
MONDEO II 1.6 i	(BAP)	09/96→11/00			MAG62DB	ETS60NDB	ETS60D4N	ES60NDB
MONDEO II 1.6 i 16V	(BAP)	05/98→11/00			MAG62DB	ETS60NDB	ETS60D4N	ES60NDB
MONDEO II 1.8 i	(BAP)	09/96→11/00			MAG62DB	ETS60NDB	ETS60D4N	ES60NDB
MONDEO II 2.0 i	(BAP)	09/96→11/00			MAG62DB	ETS60NDB	ETS60D4N	ES60NDB
MONDEO II 2.5 24V	(BAP)	06/00→11/00			MAG72DB	ETS71NDB-ETS65NDB		ES70NDB
MONDEO II 2.5 24V	(BAP)	09/96→11/00			MAG72DB	ETS71NDB-ETS65NDB		ES70NDB
MONDEO II 2.5 ST 200	(BAP)	05/99→11/00			MAG72DB	ETS71NDB-ETS65NDB		ES70NDB
MONDEO II 1.8 TD	(BAP)	09/96→11/00			MAG62DB	ETS60NDB	ETS60D4N	ES60NDB
MONDEO II Saloon 1.6 i	(BFP)	09/96→11/00			MAG62DB	ETS60NDB	ETS60D4N	ES60NDB
MONDEO II Saloon 1.6 i 16V	(BFP)	05/98→11/00			MAG62DB	ETS60NDB	ETS60D4N	ES60NDB
MONDEO II Saloon 1.8 i	(BFP)	09/96→11/00			MAG62DB	ETS60NDB	ETS60D4N	ES60NDB
MONDEO II Saloon 2.0 i	(BFP)	09/96→11/00			MAG62DB	ETS60NDB	ETS60D4N	ES60NDB
MONDEO II Saloon 2.5 24V	(BFP)	06/00→11/00			MAG72DB	ETS71NDB-ETS65NDB		ES70NDB
MONDEO II Saloon 2.5 24V	(BFP)	09/96→11/00			MAG72DB	ETS71NDB-ETS65NDB		ES70NDB
MONDEO II Saloon 2.5 ST 200	(BFP)	05/99→11/00			MAG72DB	ETS71NDB-ETS65NDB		ES70NDB
MONDEO II Saloon 1.8 TD	(BFP)	09/96→11/00			MAG62DB	ETS60NDB	ETS60D4N	ES60NDB
MONDEO II Estate 1.6 i	(BNP)	09/96→11/00			MAG62DB	ETS60NDB	ETS60D4N	ES60NDB
MONDEO II Estate 1.6 i 16V	(BNP)	05/98→11/00			MAG62DB	ETS60NDB	ETS60D4N	ES60NDB
MONDEO II Estate 1.8 i	(BNP)	09/96→11/00			MAG62DB	ETS60NDB	ETS60D4N	ES60NDB
MONDEO II Estate 2.0 i	(BNP)	09/96→11/00			MAG62DB	ETS60NDB	ETS60D4N	ES60NDB
MONDEO II Estate 2.5 24V	(BNP)	06/00→11/00			MAG72DB	ETS71NDB-ETS65NDB		ES70NDB
MONDEO II Estate 2.5 24V	(BNP)	09/96→11/00			MAG72DB	ETS71NDB-ETS65NDB		ES70NDB
MONDEO II Estate 2.5 ST 200	(BNP)	05/99→11/00			MAG72DB	ETS71NDB-ETS65NDB		ES70NDB

	Design		START	RUN	MAGIS	ETS	ETS alternative	ES
FORD								
MONDEO II Estate 1.8 TD	(BNP)	09/96→11/00			MAG62DB	ETS60NDB	ETS60D4N	ES60NDB
MONDEO III 1.8 16V	(B5Y)	11/00→08/07			MAG62DB	ETS60NDB	ETS60D4N	ES60NDB
MONDEO III 1.8 16V	(B5Y)	11/00→08/07			MAG62DB	ETS60NDB	ETS60D4N	ES60NDB
MONDEO III 1.8 SCi	(B5Y)	06/03→08/07			MAG62DB	ETS60NDB	ETS60D4N	ES60NDB
MONDEO III 2.0 16V	(B5Y)	11/00→08/07			MAG62DB	ETS60NDB	ETS60D4N	ES60NDB
MONDEO III 2.5 V6 24V	(B5Y)	11/00→08/07			MAG72DB	ETS71NDB-ETS65NDB		ES70NDB
MONDEO III 3.0 V6 24V	(B5Y)	09/04→08/07			MAG72DB	ETS71NDB-ETS65NDB		ES70NDB
MONDEO III ST220	(B5Y)	04/02→08/07			MAG72DB	ETS71NDB-ETS65NDB		ES70NDB
MONDEO III 2.0 16V DI / TDDi / TDCi	(B5Y)	11/00→08/07			MAG72DB	ETS71NDB		
MONDEO III 2.0 16V TDDi / TDCi	(B5Y)	11/00→08/07			MAG72DB	ETS71NDB		
MONDEO III 2.0 TDCi	(B5Y)	10/01→08/07			MAG72DB	ETS71NDB		
MONDEO III 2.2 TDCi	(B5Y)	09/04→08/07			MAG72DB	ETS71NDB		
MONDEO III Saloon 1.8 16V	(B4Y)	11/00→08/07			MAG62DB	ETS60NDB	ETS60D4N	ES60NDB
MONDEO III Saloon 1.8 16V	(B4Y)	11/00→08/07			MAG62DB	ETS60NDB	ETS60D4N	ES60NDB
MONDEO III Saloon 1.8 SCi	(B4Y)	06/03→08/07			MAG62DB	ETS60NDB	ETS60D4N	ES60NDB
MONDEO III Saloon 2.0 16V	(B4Y)	11/00→08/07			MAG62DB	ETS60NDB	ETS60D4N	ES60NDB
MONDEO III Saloon 2.5 V6 24V	(B4Y)	11/00→08/07			MAG72DB	ETS71NDB-ETS65NDB		ES70NDB
MONDEO III Saloon 3.0 V6 24V	(B4Y)	09/04→08/07			MAG72DB	ETS71NDB-ETS65NDB		ES70NDB
MONDEO III Saloon ST220	(B4Y)	04/02→08/07			MAG72DB	ETS71NDB-ETS65NDB		ES70NDB
MONDEO III Saloon 2.0 16V DI / TDDi / TDCi	(B4Y)	11/00→08/07			MAG72DB	ETS71NDB		
MONDEO III Saloon 2.0 16V TDDi / TDCi	(B4Y)	11/00→08/07			MAG72DB	ETS71NDB		
MONDEO III Saloon 2.0 TDCi	(B4Y)	10/01→08/07			MAG72DB	ETS71NDB		
MONDEO III Saloon 2.2 TDCi	(B4Y)	09/04→08/07			MAG72DB	ETS71NDB		
MONDEO III Estate 1.8 16V	(BWY)	11/00→08/07			MAG62DB	ETS60NDB	ETS60D4N	ES60NDB
MONDEO III Estate 1.8 16V	(BWY)	11/00→08/07			MAG62DB	ETS60NDB	ETS60D4N	ES60NDB
MONDEO III Estate 1.8 SCi	(BWY)	06/03→08/07			MAG62DB	ETS60NDB	ETS60D4N	ES60NDB
MONDEO III Estate 2.0 16V	(BWY)	11/00→08/07			MAG62DB	ETS60NDB	ETS60D4N	ES60NDB
MONDEO III Estate 2.5 V6 24V	(BWY)	11/00→08/07			MAG72DB	ETS71NDB-ETS65NDB		ES70NDB
MONDEO III Estate 3.0 V6 24V	(BWY)	09/04→08/07			MAG72DB	ETS71NDB-ETS65NDB		ES70NDB
MONDEO III Estate ST220	(BWY)	04/02→08/07			MAG72DB	ETS71NDB-ETS65NDB		ES70NDB
MONDEO III Estate 2.0 16V DI / TDDi / TDCi	(BWY)	11/00→08/07			MAG72DB	ETS71NDB		
MONDEO III Estate 2.0 16V TDDi / TDCi	(BWY)	11/00→08/07			MAG72DB	ETS71NDB		
MONDEO III Estate 2.0 TDCi	(BWY)	10/01→08/07			MAG72DB	ETS71NDB		
MONDEO III Estate 2.2 TDCi	(BWY)	09/04→08/07			MAG72DB	ETS71NDB		
MONDEO IV 1.6 Ti		03/07→			MAG62DB	ETS60NDB	ETS60D4N	ES60NDB
MONDEO IV 1.6 Ti		03/07→			MAG62DB	ETS60NDB	ETS60D4N	ES60NDB
MONDEO IV 2.0 SCTi		03/10→			MAG62DB	ETS60NDB	ETS60D4N	ES60NDB
MONDEO IV 2.0		03/07→			MAG62DB	ETS60NDB	ETS60D4N	ES60NDB
MONDEO IV 2.0 Flexifuel		03/07→			MAG62DB	ETS60NDB	ETS60D4N	ES60NDB
MONDEO IV 2.3		07/07→			MAG72DB	ETS71NDB		
MONDEO IV 2.5		03/07→			MAG72DB	ETS71NDB		
MONDEO IV 1.8 TDCi		03/07→			MAG72DB	ETS71NDB		
MONDEO IV 1.8 TDCi		06/07→			MAG72DB	ETS71NDB		
MONDEO IV 2.0 TDCi		11/07→			MAG72DB	ETS71NDB		
MONDEO IV 2.0 TDCi		03/07→			MAG72DB	ETS71NDB		

	Design		START	RUN	MAGIS	ETS	ETS alternative	ES
FORD								
MONDEO IV 2.0 TDCi		03/07→			MAG72DB	ETS71NDB		
MONDEO IV 2.0 TDCi		03/10→			MAG72DB	ETS71NDB		
MONDEO IV 2.2 TDCi		03/08→			MAG72DB	ETS71NDB		
MONDEO IV Saloon 1.6 Ti		03/07→			MAG62DB	ETS60NDB	ETS60D4N	ES60NDB
MONDEO IV Saloon 2.0		03/07→			MAG72DB	ETS71NDB		
MONDEO IV Saloon 2.0 Flexifuel		03/07→			MAG62DB	ETS60NDB	ETS60D4N	ES60NDB
MONDEO IV Saloon 2.3		07/07→			MAG72DB	ETS71NDB		
MONDEO IV Saloon 2.5		03/07→			MAG72DB	ETS71NDB		
MONDEO IV Saloon 1.8 TDCi		03/07→			MAG72DB	ETS71NDB		
MONDEO IV Saloon 1.8 TDCi		06/07→			MAG72DB	ETS71NDB		
MONDEO IV Saloon 2.0 TDCi		11/07→			MAG72DB	ETS71NDB		
MONDEO IV Saloon 2.0 TDCi		03/07→			MAG72DB	ETS71NDB		
MONDEO IV Saloon 2.0 TDCi		03/07→			MAG72DB	ETS71NDB		
MONDEO IV Saloon 2.2 TDCi		03/08→			MAG72DB	ETS71NDB		
MONDEO IV Turnier 1.6 Ti		03/07→			MAG62DB	ETS60NDB	ETS60D4N	ES60NDB
MONDEO IV Turnier 1.6 Ti		03/07→			MAG62DB	ETS60NDB	ETS60D4N	ES60NDB
MONDEO IV Turnier 2.0 SCTi		03/10→			MAG62DB	ETS60NDB	ETS60D4N	ES60NDB
MONDEO IV Turnier 2.0		03/07→			MAG62DB	ETS60NDB	ETS60D4N	ES60NDB
MONDEO IV Turnier 2.0 Flexifuel		03/07→			MAG62DB	ETS60NDB	ETS60D4N	ES60NDB
MONDEO IV Turnier 2.3		07/07→			MAG72DB	ETS71NDB		
MONDEO IV Turnier 2.5		03/07→			MAG72DB	ETS71NDB		
MONDEO IV Turnier 1.8 TDCi		03/07→			MAG72DB	ETS71NDB		
MONDEO IV Turnier 1.8 TDCi		06/07→			MAG72DB	ETS71NDB		
MONDEO IV Turnier 2.0 TDCi		11/07→			MAG72DB	ETS71NDB		
MONDEO IV Turnier 2.0 TDCi		03/07→			MAG72DB	ETS71NDB		
MONDEO IV Turnier 2.0 TDCi		03/07→			MAG72DB	ETS71NDB		
MONDEO IV Turnier 2.0 TDCi		03/10→			MAG72DB	ETS71NDB		
MONDEO IV Turnier 2.2 TDCi		03/08→			MAG72DB	ETS71NDB		
ORION III 1.6 i 16V	(GAL)	07/92→12/93			MAG62DB	ETS60NDB	ETS60D4N	ES60NDB
ORION III 1.6	(GAL)	07/90→12/92			MAG62DB	ETS60NDB	ETS60D4N	ES60NDB
ORION III 1.6 i	(GAL)	07/90→09/92			MAG62DB	ETS60NDB	ETS60D4N	ES60NDB
ORION III 1.8 i 16V	(GAL)	02/92→12/93			MAG62DB	ETS60NDB	ETS60D4N	ES60NDB
ORION III 1.8 i 16V	(GAL)	01/92→12/93			MAG62DB	ETS60NDB	ETS60D4N	ES60NDB
ORION III 1.8 D	(GAL)	11/90→12/93			MAG62DB	ETS60NDB-ETS50NDB		ES60NDB
ORION III 1.8 TD	(GAL)	03/92→12/93			MAG62DB	ETS60NDB-ETS50NDB		ES60NDB
PUMA 1.4 16V	(EC_)	11/97→10/00			MAG44DB	ETS44NDB		ES45NDB
PUMA 1.6 16V	(EC_)	08/00→			MAG62DB	ETS60NDB	ETS60D4N	ES60NDB
PUMA 1.7 16V	(EC_)	03/97→			MAG62DB	ETS60NDB	ETS60D4N	ES60NDB
PUMA ST 160	(EC_)	06/99→			MAG62DB	ETS60NDB	ETS60D4N	ES60NDB
SCORPIO I 2.0 i	(GAE, GGE)	02/92→09/94			MAG62DB	ETS60NDB	ETS60D4N	ES60NDB
SCORPIO I 2.9 i 24V	(GAE, GGE)	04/91→09/94			MAG72DB	ETS71NDB		
SCORPIO I 2.5 TD	(GAE, GGE)	08/93→09/94			MAG72DB	ETS71NDB		
SCORPIO I Saloon 1.9	(GGE)	11/92→09/93			MAG62DB	ETS60NDB	ETS60D4N	ES60NDB
SCORPIO I Saloon 2.0	(GGE)	03/90→08/92			MAG62DB	ETS60NDB	ETS60D4N	ES60NDB
SCORPIO I Saloon 2.0 i	(GGE)	02/92→09/94			MAG62DB	ETS60NDB	ETS60D4N	ES60NDB
SCORPIO I Saloon 2.9 i 24V	(GGE)	04/91→09/94			MAG72DB	ETS71NDB		
SCORPIO I Saloon 2.5 TD	(GGE)	08/93→09/94			MAG72DB	ETS71NDB		

	Design		START	RUN	MAGIS	ETS	ETS alternative	ES
FORD								
SCORPIO I Estate 2.0 i	(GGE)	09/91→09/94			MAG62DB	ETS60NDB	ETS60D4N	ES60NDB
SCORPIO I Estate 2.0 i	(GGE)	09/91→09/94			MAG62DB	ETS60NDB	ETS60D4N	ES60NDB
SCORPIO I Estate 2.4 i	(GGE)	09/91→09/94			MAG62DB	ETS60NDB	ETS60D4N	ES60NDB
SCORPIO I Estate 2.9 i	(GGE)	09/91→09/94			MAG72DB	ETS71NDB		
SCORPIO I Estate 2.9 24V	(GGE)	08/93→09/94			MAG72DB	ETS71NDB		
SCORPIO I Estate 2.5 TD	(GGE)	09/91→07/93			MAG72DB	ETS71NDB		
SCORPIO I Estate 2.5 D	(GGE)	10/90→08/92			MAG72DB	ETS71NDB		
SCORPIO I Estate 2.5 TD	(GGE)	08/93→09/94			MAG72DB	ETS71NDB		
SCORPIO II 2.0 i	(GFR, GGR)	10/94→08/98			MAG62DB	ETS60NDB	ETS60D4N	ES60NDB
SCORPIO II 2.0 i 16V	(GFR, GGR)	10/94→08/98			MAG62DB	ETS60NDB	ETS60D4N	ES60NDB
SCORPIO II 2.3 i 16V	(GFR, GGR)	06/96→08/98			MAG62DB	ETS60NDB	ETS60D4N	ES60NDB
SCORPIO II 2.9 i	(GFR, GGR)	02/95→08/98			MAG72DB	ETS71NDB		
SCORPIO II 2.9 i 24V	(GFR, GGR)	10/94→08/98			MAG72DB	ETS71NDB		
SCORPIO II 2.5 TD	(GFR, GGR)	10/94→08/98			MAG72DB	ETS71NDB		
SCORPIO II 2.5 TD	(GFR, GGR)	09/96→08/98			MAG72DB	ETS71NDB		
SCORPIO II Estate 2.0 i	(GNR, GGR)	10/94→08/98			MAG62DB	ETS60NDB	ETS60D4N	ES60NDB
SCORPIO II Estate 2.0 i 16V	(GNR, GGR)	10/94→08/98			MAG62DB	ETS60NDB	ETS60D4N	ES60NDB
SCORPIO II Estate 2.3 i 16V	(GNR, GGR)	06/96→08/98			MAG62DB	ETS60NDB	ETS60D4N	ES60NDB
SCORPIO II Estate 2.9 i	(GNR, GGR)	02/95→08/98			MAG72DB	ETS71NDB		
SCORPIO II Estate 2.9 i 24V	(GNR, GGR)	10/94→08/98			MAG72DB	ETS71NDB		
SCORPIO II Estate 2.5 TD	(GNR, GGR)	10/94→08/98			MAG72DB	ETS71NDB		
SCORPIO II Estate 2.5 TD	(GNR, GGR)	09/96→08/98			MAG72DB	ETS71NDB		
SIERRA Hatchback 2.0 i DOHC	(GBC, GBG)	12/91→02/93			MAG62DB	ETS60NDB	ETS60D4N	ES60NDB
SIERRA Hatchback 2.0 16V Cosworth 4x4	(GBC, GBG)	01/90→02/93			MAG62DB	ETS60NDB	ETS60D4N	ES60NDB
SIERRA Hatchback 2.0 4x4	(GBC, GBG)	10/91→03/93			MAG62DB	ETS60NDB	ETS60D4N	ES60NDB
SIERRA Hatchback 2.0 16V Cosworth 4x4 CAT	(GBC, GBG)	01/90→02/93			MAG62DB	ETS60NDB	ETS60D4N	ES60NDB
SIERRA 2.0 i DOHC	(GBG, GB4)	12/91→02/93			MAG62DB	ETS60NDB	ETS60D4N	ES60NDB
SIERRA 2.0 i	(GBG, GB4)	01/90→02/93			MAG62DB	ETS60NDB	ETS60D4N	ES60NDB
SIERRA 2.0 4x4	(GBG, GB4)	01/90→02/93			MAG62DB	ETS60NDB	ETS60D4N	ES60NDB
SIERRA 2.0 i	(GBG, GB4)	01/90→02/93			MAG62DB	ETS60NDB	ETS60D4N	ES60NDB
SIERRA 2.0 4x4	(GBG, GB4)	01/90→02/93			MAG62DB	ETS60NDB	ETS60D4N	ES60NDB
SIERRA 2.0 16V Cosworth 4x4	(GBG, GB4)	01/90→02/93			MAG62DB	ETS60NDB	ETS60D4N	ES60NDB
SIERRA Estate 2.0 i DOHC	(BNG)	12/91→02/93			MAG62DB	ETS60NDB	ETS60D4N	ES60NDB
SIERRA Estate 2.0 4x4	(BNG)	02/90→02/93			MAG62DB	ETS60NDB	ETS60D4N	ES60NDB
S-MAX 2.0		05/06→			MAG62DB	ETS60NDB	ETS60D4N	ES60NDB
S-MAX 2.0 Flexifuel		05/06→			MAG62DB	ETS60NDB	ETS60D4N	ES60NDB
S-MAX 2.0 SCTi		03/10→			MAG72DB	ETS71NDB		
S-MAX 2.3		07/07→			MAG72DB	ETS71NDB		
S-MAX 2.5 ST		05/06→			MAG72DB	ETS71NDB		
TOURNEO CONNECT 1.8 16V		06/02→			MAG72DB	ETS71NDB		
TOURNEO CONNECT 1.8 Di		06/02→			MAG72DB	ETS71NDB		
TOURNEO CONNECT 1.8 Turbo Di		06/02→			MAG72DB	ETS71NDB		
TOURNEO CONNECT 1.8 TDCi		08/06→			MAG72DB	ETS71NDB		
TRANSIT CONNECT 1.8 16V	(P65_, P70_, P80_)	06/02→			MAG72DB	ETS71NDB		
TRANSIT CONNECT 1.8 Di	(P65_, P70_, P80_)	06/02→			MAG72DB	ETS71NDB		

	Design		START	RUN	MAGIS	ETS	ETS alternative	ES
FORD								
TRANSIT CONNECT 1.8 TDCi	(P65_, P70_, P80_)	06/02→			MAG72DB	ETS71NDB		
TRANSIT CONNECT 1.8 TDCi	(P65_, P70_, P80_)	08/06→			MAG72DB	ETS71NDB		
TRANSIT Bus 2.0	(E_ _)	09/91→09/94			MAG62DB	ETS60NDB-ETS50NDB		ES60NDB
TRANSIT Bus 2.0 i (EBL, EDL, EGL, ESS, EUS)	(E_ _)	09/91→07/94			MAG62DB	ETS60NDB-ETS50NDB		ES60NDB
TRANSIT Bus 2.9 i	(E_ _)	01/91→			MAG72DB	ETS71NDB		
TRANSIT Bus 2.5 DI (EBS, EDS, EDL, ESS, EUS)	(E_ _)	08/91→07/94			MAG72DB	ETS71NDB		
TRANSIT Bus 2.5 DI (EBS, EDS, EGL, ESS, EUS)	(E_ _)	09/91→07/94			MAG72DB	ETS71NDB		
TRANSIT Bus 2.5 TD (EBS, EBL, ECL, EDS, EDL, ESS, EUS)	(E_ _)	10/92→07/94			MAG72DB	ETS71NDB		
TRANSIT Bus 2.5 TD (ECL, EDS, EDL, EGL, ESS, EUS)	(E_ _)	09/91→07/94			MAG72DB	ETS71NDB		
TRANSIT Box 2.0	(E_ _)	09/91→06/94			MAG62DB	ETS60NDB-ETS50NDB		ES60NDB
TRANSIT Box 2.0 i (EAL, EAS)	(E_ _)	09/91→06/94			MAG62DB	ETS60NDB-ETS50NDB		ES60NDB
TRANSIT Box 2.5 DI (EAL, EAS)	(E_ _)	05/91→06/94			MAG72DB	ETS71NDB		
TRANSIT Box 2.5 DI (EAS, EAL)	(E_ _)	05/91→06/94			MAG72DB	ETS71NDB		
TRANSIT Box 2.5 DI (EAL, EAS)	(E_ _)	10/92→06/94			MAG72DB	ETS71NDB		
TRANSIT Box 2.5 TD (EAS, EAL)	(E_ _)	05/91→06/94			MAG72DB	ETS71NDB		
TRANSIT Flatbed / Chassis 2.0 (EME/L/S, ENE/L/S)	(E_ _)	09/91→08/94			MAG62DB	ETS60NDB-ETS50NDB		ES60NDB
TRANSIT Flatbed / Chassis 2.5 DI (EML/S, ENL/S)	(E_ _)	09/91→08/94			MAG72DB	ETS71NDB		
TRANSIT Flatbed / Chassis 2.5 DI (EME/L/S, ENE/L/S)	(E_ _)	09/91→08/94			MAG72DB	ETS71NDB		
TRANSIT Flatbed / Chassis 2.5 TD (EME/L/S, ENE/L/S)	(E_ _)	11/92→08/94			MAG72DB	ETS71NDB		
TRANSIT Flatbed / Chassis 2.5 TD (EME/L/S, ENE/L)	(E_ _)	09/91→08/94			MAG72DB	ETS71NDB		
TRANSIT TOURNEO 2.0		11/94→12/00			MAG62DB	ETS60NDB-ETS50NDB		ES60NDB
TRANSIT TOURNEO 2.4 D		08/94→06/00			MAG72DB	ETS71NDB		
TRANSIT TOURNEO 2.5 DI		11/94→12/00			MAG72DB	ETS71NDB		
TRANSIT TOURNEO 2.5 DI		11/94→12/00			MAG72DB	ETS71NDB		
TRANSIT TOURNEO 2.5 TD		11/94→12/00			MAG72DB	ETS71NDB		
TRANSIT TOURNEO 2.5 TD		04/98→12/00			MAG72DB	ETS71NDB		
TRANSIT Bus 2.0 (EBL, EBS, ECL, EDS, EDL, EGL, ESS, ESL, EUS)	(E_ _)	09/95→03/00			MAG72DB	ETS71NDB		
TRANSIT Bus 2.0 CNG	(E_ _)	06/94→03/00			MAG72DB	ETS71NDB		
TRANSIT Bus 2.5 DI (EBL, EDS, ESL, ESS, EUS)	(E_ _)	08/94→03/00			MAG72DB	ETS71NDB		
TRANSIT Bus 2.5 TD (EB_, ED_, ES_)	(E_ _)	08/94→06/00			MAG72DB	ETS71NDB		
TRANSIT Bus 2.5 DI (EBL, ECL, EDS, EDL)	(E_ _)	07/94→03/00			MAG72DB	ETS71NDB		
TRANSIT Bus 2.5 TD (EBL, EDL, EDS, EGL, ESL, ESS, EUS)	(E_ _)	01/95→03/00			MAG72DB	ETS71NDB		
TRANSIT Bus 2.5 TD (ECL, EDL, EDS, ESL, ESS, EUS)	(E_ _)	07/94→03/00			MAG72DB	ETS71NDB		

	Design		START	RUN	MAGIS	ETS	ETS alternative	ES
FORD								
TRANSIT Bus 2.5 DI (EBL, EDL, EDS, ESL, ESS)	(E_ _)	08/97→03/00			MAG72DB	ETS71NDB		
TRANSIT Box 2.0 (EAL, EAS)	(E_ _)	06/94→03/00			MAG62DB	ETS60NDB-ETS50NDB		ES60NDB
TRANSIT Box 2.5 DI (EAL, EAS)	(E_ _)	06/94→03/00			MAG72DB	ETS71NDB		
TRANSIT Box 2.5 TD (EAS)	(E_ _)	10/98→03/00			MAG72DB	ETS71NDB		
TRANSIT Box 2.5 DI (EAL, EAS)	(E_ _)	06/94→03/00			MAG72DB	ETS71NDB		
TRANSIT Box 2.5 TD (EAL, EAS)	(E_ _)	06/94→03/00			MAG72DB	ETS71NDB		
TRANSIT Box 2.5 TDI (EAL, EAS)	(E_ _)	06/94→03/00			MAG72DB	ETS71NDB		
TRANSIT Box 2.5 DI (EAL, EAS)	(E_ _)	05/99→03/00			MAG72DB	ETS71NDB		
TRANSIT Flatbed / Chassis 2.0 (EME/L/S, ENE/L/S)	(E_ _)	08/94→03/00			MAG62DB	ETS60NDB-ETS50NDB		ES60NDB
TRANSIT Flatbed / Chassis 2.5 DI (EML/S, ENL/S)	(E_ _)	08/94→03/00			MAG72DB	ETS71NDB		
TRANSIT Flatbed / Chassis 2.5 TD (EME/L/S, ENE/L/S)	(E_ _)	10/98→			MAG72DB	ETS71NDB		
TRANSIT Flatbed / Chassis 2.5 DI (EME/L/S, ENE/L/S)	(E_ _)	08/94→03/00			MAG72DB	ETS71NDB		
TRANSIT Flatbed / Chassis 2.5 TD (EME/L/S, ENE/L/S)	(E_ _)	08/94→03/00			MAG72DB	ETS71NDB		
TRANSIT Flatbed / Chassis 2.5 TD (EME/L/S, ENE/L/S)	(E_ _)	08/94→03/00			MAG72DB	ETS71NDB		
TRANSIT Flatbed / Chassis 2.5 DI (EML, ENE/L)	(E_ _)	05/99→03/00			MAG72DB	ETS71NDB		
TRANSIT Bus 2.0 DI (F_E_, F_F_, F_G_)	(FD_ _, FB_ _, FS_ _, FZ_ _, FC_ _)	08/00→05/06			MAG72DB	ETS71NDB		
TRANSIT Bus 2.0 DI (F_E_, F_F_, F_G_)	(FD_ _, FB_ _, FS_ _, FZ_ _, FC_ _)	08/00→05/06			MAG72DB	ETS71NDB		
TRANSIT Bus 2.0 DI (F_E_, F_F_, F_G_)	(FD_ _, FB_ _, FS_ _, FZ_ _, FC_ _)	08/00→05/06			MAG72DB	ETS71NDB		
TRANSIT Bus 2.0	(FD_ _, FB_ _, FS_ _, FZ_ _, FC_ _)	09/00→03/06			MAG62DB	ETS60NDB-ETS50NDB		ES60NDB
TRANSIT Bus 2.0 [RWD]	(FD_ _, FB_ _, FS_ _, FZ_ _, FC_ _)	09/00→03/06			MAG62DB	ETS60NDB-ETS50NDB		ES60NDB
TRANSIT Bus 2.0 TDCi (F_F_, F_E_, F_G_)	(FD_ _, FB_ _, FS_ _, FZ_ _, FC_ _)	08/02→05/06			MAG72DB	ETS71NDB		
TRANSIT Bus 2.3	(FD_ _, FB_ _, FS_ _, FZ_ _, FC_ _)	08/00→03/06			MAG62DB	ETS60NDB-ETS50NDB		ES60NDB
TRANSIT Bus 2.3 16V [RWD] (F_B_, F_C_, F_A_)	(FD_ _, FB_ _, FS_ _, FZ_ _, FC_ _)	08/00→05/06			MAG72DB	ETS71NDB		
TRANSIT Box 2.0	(FA_ _)	09/00→03/06			MAG62DB	ETS60NDB-ETS50NDB		ES60NDB
TRANSIT Box 2.0 [RWD]	(FA_ _)	09/00→03/06			MAG62DB	ETS60NDB-ETS50NDB		ES60NDB
TRANSIT Box 2.3	(FA_ _)	03/01→03/06			MAG62DB	ETS60NDB-ETS50NDB		ES60NDB
TRANSIT Box 2.3 16V [RWD] (FAA_, FAB_, FAC_)	(FA_ _)	04/01→05/06			MAG72DB	ETS71NDB		
TRANSIT Box 2.3	(FA_ _)	03/01→03/06			MAG62DB	ETS60NDB-ETS50NDB		ES60NDB
TRANSIT Box 2.0 DI (FAE_, FAF_, FAG_)	(FA_ _)	08/00→05/06			MAG72DB	ETS71NDB		
TRANSIT Box 2.0 DI (FAE_, FAF_, FAG_)	(FA_ _)	08/00→05/06			MAG72DB	ETS71NDB		

	Design		START	RUN	MAGIS	ETS	ETS alternative	ES
FORD								
TRANSIT Box 2.0 DI (FAE_, FAF_, FAG_)	(FA_ _)	08/00→05/06			MAG72DB	ETS71NDB		
TRANSIT Box 2.0 TDCi	(FA_ _)	08/02→05/06			MAG72DB	ETS71NDB		
TRANSIT Flatbed / Chassis 2.3 16V (F_A_, F_B_, F_C_, F_D_)	(FM_ _, FN_ _)	04/01→05/06			MAG72DB	ETS71NDB		
TRANSIT Flatbed / Chassis 2.0 DI (F_E_, F_F_)	(FM_ _, FN_ _)	08/00→05/06			MAG72DB	ETS71NDB		
TRANSIT Flatbed / Chassis 2.0 DI (F_E_, F_F_)	(FM_ _, FN_ _)	08/00→05/06			MAG72DB	ETS71NDB		
TRANSIT Flatbed / Chassis 2.0 DI (F_E_, F_F_)	(FM_ _, FN_ _)	08/00→05/06			MAG72DB	ETS71NDB		
TRANSIT Flatbed / Chassis 2.3	(FM_ _, FN_ _)	03/01→03/06			MAG62DB	ETS60NDB-ETS50NDB		ES60NDB
TRANSIT Flatbed / Chassis 2.0 TDCi (F_E_, F_F_)	(FM_ _, FN_ _)	08/02→05/06			MAG72DB	ETS71NDB		
TRANSIT Box 2.3 16V		07/06→			MAG72DB	ETS71NDB		
TRANSIT Flatbed / Chassis 2.3 16V		07/06→			MAG72DB	ETS71NDB		
USA EXPLORER 4.0 V6 All-wheel Drive	(U2)	03/95→				ETS63NS		
USA EXPLORER 4.0 V6 All-wheel Drive	(U2)	01/93→				ETS63NS		
USA EXPLORER 4.0 V6 All-wheel Drive	(U2)	10/98→				ETS63NS		
USA EXPLORER 4.0 V6 All-wheel Drive	(U2)	05/98→				ETS63NS		
USA EXPLORER 4.9 V6 All-wheel Drive	(U2)	01/96→				ETS63NS		
USA MUSTANG 3.8	(C)	09/93→		RUN62D	MAG62D	ETS62ND	ETS60D3N	438320ES
USA MUSTANG 4.9	(C)	09/93→		RUN62D	MAG62D	ETS62ND	ETS60D3N	438320ES
USA MUSTANG Convertible 3.8	(C)	09/93→		RUN62D	MAG62D	ETS62ND	ETS60D3N	438320ES
USA MUSTANG Convertible 4.9	(C)	09/93→		RUN62D	MAG62D	ETS62ND	ETS60D3N	438320ES
USA PROBE II 2.0 16V	(ECP)	10/93→03/98			MAG62DB	ETS60NDB-ETS50NDB		ES60NDB
USA PROBE II 2.5 V6 24V	(ECP)	10/93→03/98			MAG62DB	ETS60NDB-ETS50NDB		ES60NDB
USA PROBE II 2.5 V6 24V	(ECP)	12/94→03/98			MAG62DB	ETS60NDB-ETS50NDB		ES60NDB
FSO								
FSO POLONEZ III 1.4 i 16V		09/92→				ETS40NS		
FSO POLONEZ III 1.6 i		09/92→				ETS55NS		
FSO POLONEZ III 1.9 D		09/92→				ETS55NS		
FSO POLONEZ III Saloon 1.6 i		09/92→				ETS55NS		
HONDA								
ACCORD VII 1.8 i	(CG, CK)	10/98→12/02		RUN62D	MAG62D	ETS62ND	ETS60D3N	438320ES
ACCORD VII 2.0 i	(CG, CK)	10/98→01/01		RUN62D	MAG62D	ETS62ND	ETS60D3N	438320ES
ACCORD VII 2.0 Turbo DI	(CG, CK)	02/99→12/02		RUN72D	MAG74D	ETS74ND	ETS70D1N-ETS74DI	476420ES
ACCORD VII Hatchback 1.8 i (CH6)	(CH)	12/99→12/02		RUN62D	MAG62D	ETS62ND	ETS60D3N	438320ES
ACCORD VII Hatchback 2.0 (CH7)	(CH)	12/99→12/02		RUN62D	MAG62D	ETS62ND	ETS60D3N	438320ES
ACCORD VII Hatchback 2.0 TDi	(CH)	12/99→10/00		RUN72D	MAG74D	ETS74ND	ETS70D1N-ETS74DI	476420ES
ACCORD VII Coupe 2.0 i 16V	(CG)	02/98→06/03		RUN62D	MAG62D	ETS62ND	ETS60D3N	438320ES
ACCORD VIII 2.0 (CL7)	(CL_, CM_)	02/03→						ES45300D
ACCORD VIII 2.0 All-wheel Drive (CL8)	(CL_, CM_)	02/03→						ES45300S
ACCORD VIII 2.2 i-CTDi	(CL_, CM_)	01/04→		RUN72D	MAG74D	ETS74ND	ETS70D1N-ETS74DI	476420ES
ACCORD VIII Tourer 2.0 (CM1)	(CM_)	04/03→						ES45300D
ACCORD VIII Tourer 2.4 (CM2)	(CM_)	04/03→						ES45300D

	Design		START	RUN	MAGIS	ETS	ETS alternative	ES
FORD								
ACCORD VIII Tourer 2.2 i-CTDi	(CM_)	01/04→		RUN72D	MAG74D	ETS74ND	ETS70D1N-ETS74DI	476420ES
ACCORD Coupe 2.4		07/03→03/06		RUN62D	MAG62D	ETS62ND	ETS60D3N	438320ES
ACCORD Coupe 2.4		04/06→07/08		RUN62D	MAG62D	ETS62ND	ETS60D3N	438320ES
ACCORD Coupe 3.0 VTi- Vtec		04/06→		RUN62D	MAG62D	ETS62ND	ETS60D3N	438320ES
ACCORD IX 2.0		07/08→						ES45300D
ACCORD IX 2.4		07/08→						ES45300D
ACCORD IX 2.2 i-DTEC		07/08→		RUN72D	MAG74D	ETS74ND	ETS70D1N-ETS74DI	476420ES
CIVIC IV Hatchback 1.3 16V (EG3)	(EG)	10/91→11/95						ES45300SJ
CIVIC IV Hatchback 1.5 i 16V (EG4)	(EG)	10/91→11/95						ES45300SJ
CIVIC IV Hatchback 1.5 i 16V (EG4)	(EG)	10/91→11/95						ES45300SJ
CIVIC IV Hatchback 1.6 16V Vtec (EG5)	(EG)	10/91→11/95						ES45300SJ
CIVIC IV Hatchback 1.6 VTi 16V (EG6)	(EG)	10/91→11/95						ES45300SJ
CIVIC IV Fastback 1.4 i (MA8)	(MA, MB)	09/95→01/97						ES45300SJ
CIVIC IV Fastback 1.4 i (MA8)	(MA, MB)	09/94→01/97						ES45300SJ
CIVIC IV Fastback 1.5 i Vtec-E (MA9)	(MA, MB)	09/94→01/97						ES45300SJ
CIVIC IV Fastback 1.6 i (MB1)	(MA, MB)	09/94→01/97						ES45300SJ
CIVIC IV Fastback 1.6 i Vtec (MB1)	(MA, MB)	09/94→01/97						ES45300SJ
CIVIC IV 1.3	(EG, EH)	01/92→12/92						ES45300SJ
CIVIC IV 1.5	(EG, EH)	01/92→12/92						ES45300SJ
CIVIC IV 1.5	(EG, EH)	10/93→12/95						ES45300SJ
CIVIC IV 1.5 i 16V (EG8)	(EG, EH)	10/91→11/95						ES45300SJ
CIVIC IV 1.5 (EG8)	(EG, EH)	10/93→12/95						ES45300SJ
CIVIC IV 1.5	(EG, EH)	06/93→09/95						ES45300SJ
CIVIC IV 1.6 EX	(EG, EH)	08/93→10/95						ES45300SJ
CIVIC IV 1.6 16V Vtec (EH9)	(EG, EH)	10/91→11/95						ES45300SJ
CIVIC IV 1.6 4x4	(EG, EH)	01/92→10/95						ES45300SJ
CIVIC IV 1.6 (EH9)	(EG, EH)	10/91→10/93						ES45300SJ
CIVIC IV 1.6 VTi (EG9)	(EG, EH)	10/91→11/95						ES45300SJ
CIVIC IV Coupe 1.5	(EJ)	08/93→12/95						ES45300SJ
CIVIC IV Coupe 1.5 i LSi (EJ2)	(EJ)	01/94→11/95						ES45300SJ
CIVIC IV Coupe 1.6 i (EJ6)	(EJ)	01/94→11/95						ES45300SJ
CIVIC IV Coupe 1.6 i Vtec (EJ1)	(EJ)	01/94→03/96						ES45300SJ
CIVIC IV Coupe 1.6 i Vtec	(EJ)	01/94→11/95						ES45300SJ
CIVIC V Hatchback 1.4 i (EJ9)	(EJ9, EK1/3/4)	11/95→02/01						ES45300S
CIVIC V Hatchback 1.4 i S (EJ9)	(EJ9, EK1/3/4)	11/95→02/01						ES45300S
CIVIC V Hatchback 1.5	(EJ9, EK1/3/4)	11/95→12/96						ES45300S
CIVIC V Hatchback 1.5 i (EK3)	(EJ9, EK1/3/4)	11/95→02/01						ES45300S
CIVIC V Hatchback 1.6 i (EK1)	(EJ9, EK1/3/4)	11/95→02/01						ES45300S
CIVIC V Hatchback 1.6	(EJ9, EK1/3/4)	10/95→09/00						ES45300S
CIVIC V Hatchback 1.6	(EJ9, EK1/3/4)	11/98→10/00						ES45300S
CIVIC V Hatchback 1.6	(EJ9, EK1/3/4)	10/95→09/00						ES45300S
CIVIC V Hatchback 1.6	(EJ9, EK1/3/4)	10/95→03/99						ES45300S
CIVIC V Hatchback 1.6 VTi (EK4)	(EJ9, EK1/3/4)	11/95→02/01						ES45300S
CIVIC V Fastback 1.4 16V (MB2)	(MB)	01/97→02/01						ES45300S
CIVIC V Fastback 1.4 16V (MB2)	(MB)	01/97→02/01						ES45300S
CIVIC V Fastback 1.5 16V (MB3)	(MB)	01/97→02/01						ES45300S
CIVIC V Fastback 1.6 16V (MB4)	(MB)	01/97→02/01						ES45300S

	Design		START	RUN	MAGIS	ETS	ETS alternative	ES
FORD								
CIVIC V Fastback 1.6	(MB)	11/98→10/00						ES45300S
CIVIC V Fastback 1.6 VTi	(MB)	01/97→02/01						ES45300S
CIVIC V Fastback 1.8 16V (MB6)	(MB)	01/97→02/01						ES45300S
CIVIC V 1.2	(EJ9, EK3/4)	11/97→03/01						ES45300S
CIVIC V 1.4	(EJ9, EK3/4)	11/95→10/98						ES45300S
CIVIC V 1.4 i (EJ9)	(EJ9, EK3/4)	11/95→02/01						ES45300S
CIVIC V 1.5 i (EK3)	(EJ9, EK3/4)	11/95→02/01						ES45300S
CIVIC V 1.6 i Vtec	(EJ9, EK3/4)	11/95→02/01						ES45300S
CIVIC V 1.6	(EJ9, EK3/4)	10/95→09/00						ES45300S
CIVIC V 1.6	(EJ9, EK3/4)	10/95→09/00						ES45300S
CIVIC V 1.6 VTi (EK4)	(EJ9, EK3/4)	11/95→02/01						ES45300S
CIVIC V 1.7	(EJ9, EK3/4)	11/97→03/01						ES45300S
CIVIC V Coupe 1.6 i	(EJ6, EJ8)	03/96→03/00						ES45300S
CIVIC V Coupe 1.6 i Vtec	(EJ6, EJ8)	03/96→03/00						ES45300S
CIVIC V Coupe 1.6 i Vtec	(EJ6, EJ8)	04/99→12/00						ES45300S
CIVIC V Aerodeck 1.4 16V (MB8)		04/98→02/01						ES45300S
CIVIC V Aerodeck 1.4 16V (MB8)		04/98→02/01						ES45300S
CIVIC V Aerodeck 1.5 16V (MB9)		04/98→02/01						ES45300S
CIVIC V Aerodeck 1.6 16V (MC1)		04/98→02/01						ES45300S
CIVIC V Aerodeck 1.8 16V (MC2)		04/98→02/01						ES45300S
CIVIC VI Hatchback 1.4 i	(EU, EP, ES)	02/01→09/05						ES45300S
CIVIC VI Hatchback 1.4 iS (EP1)	(EU, EP, ES)	02/01→09/05						ES45300S
CIVIC VI Hatchback 1.6 i	(EU, EP, ES)	02/01→09/05						ES45300S
CIVIC VI Hatchback 1.7 (ES1)	(EU, EP, ES)	01/00→08/05						ES45300S
CIVIC VI Hatchback 2.0 i Sport	(EU, EP, ES)	01/04→09/05						ES45300S
CIVIC VI Hatchback 2.0 Type-R	(EU, EP, ES)	09/01→09/05						ES45300S
CIVIC VI Hatchback 1.7 CTDi	(EU, EP, ES)	01/02→09/05		RUN72D	MAG74D	ETS74ND	ETS70D1N-ETS74DI	476420ES
CIVIC VI 1.3 IMA	(EU)	01/04→09/05						ES45300S
CIVIC VI 1.6	(EU)	09/05→09/05						ES45300S
CIVIC VI 1.4 (ES4)	(EU)	02/01→09/05						ES45300S
CIVIC VI 1.6	(EU)	02/01→09/05						ES45300S
CIVIC VI 1.7 (EU3)	(EU)	02/01→09/05						ES45300S
CIVIC VI 1.8	(EU)	07/03→08/05						ES45300S
CIVIC VI 1.8	(EU)	09/05→09/05						ES45300S
CIVIC VI Coupe 1.6 i	(EM)	02/01→12/05						ES45300S
CIVIC VI Coupe 1.7 i	(EM)	05/01→12/05						ES45300S
CIVIC VI Coupe 1.7 i VTEC	(EM)	05/01→12/05						ES45300S
CIVIC VII Hatchback 1.4	(FD_)	01/06→						ES45300D
CIVIC VII Hatchback 1.4	(FD_)	10/08→						ES45300D
CIVIC VII Hatchback 1.6	(FD_)	09/05→						ES45300D
CIVIC VII Hatchback 1.8	(FD_)	01/06→						ES45300D
CIVIC VII Hatchback 2.2 CTDi	(FD_)	01/06→		RUN72D	MAG74D	ETS74ND	ETS70D1N-ETS74DI	476420ES
CONCERTO 1.8 TD	(HW)	08/94→10/96		RUN72D	MAG74D	ETS74ND	ETS70D1N-ETS74DI	476420ES
CONCERTO 1.8 TD	(HW)	08/94→10/96		RUN72D	MAG74D	ETS74ND	ETS70D1N-ETS74DI	476420ES
CR-V I 2.0 16V (RD1, RD3)	(RD)	10/95→01/99						ES45300D
CR-V I 2.0 16V (RD1, RD3)	(RD)	01/99→02/02						ES45300D
CR-V II 2.0	(RD_)	07/02→09/06						ES45300D

	Design		START	RUN	MAGIS	ETS	ETS alternative	ES
FORD								
CR-V II 2.2 CTDi	(RD_)	02/05→09/06		RUN72D	MAG74D	ETS74ND	ETS70D1N-ETS74DI	476420ES
CR-V III 2.0 i-VTEC		01/07→		RUN50D	MAG50D	ETS50ND	ETS50D3N-ETS50D4N	
CR-V III 2.4 iVtec All-wheel Drive		10/06→		RUN62D	MAG62D	ETS62ND	ETS60D3N	438320ES
CR-V III 2.4		04/07→		RUN62D	MAG62D	ETS62ND	ETS60D3N	438320ES
CR-V III 2.2 i-CTDi		01/07→		RUN72D	MAG74D	ETS74ND	ETS70D1N-ETS74DI	476420ES
CRX III 1.6 ESi (EH6)	(EH, EG)	03/92→12/98						ES45300S
CRX III 1.6 i VTi (EG2)	(EH, EG)	03/92→12/98						ES45300S
FR-V 1.7	(BE)	02/05→						ES45300D
FR-V 1.8	(BE)	01/07→						ES45300D
FR-V 2.0	(BE)	02/05→						ES45300D
FR-V 2.2 i CTDi	(BE)	07/05→		RUN72D	MAG74D	ETS74ND	ETS70D1N-ETS74DI	476420ES
HR-V 1.6 16V	(GH)	03/99→						ES45300D
HR-V 1.6 16V 4WD	(GH)	03/99→						ES45300D
HR-V 1.6 16V 4WD	(GH)	10/99→						ES45300D
INTEGRA Coupe 1.8 Type-R	(DC2, DC4)	11/97→10/01						ES45300D
INTEGRA 2.0	(DC5)	10/04→						ES45300D
INTEGRA 2.0 16V Type-R	(DC5)	02/02→						ES45300D
JAZZ II 1.2	(GD)	03/02→						ES35240DJ
JAZZ II 1.4	(GD)	03/02→07/08						ES45300DJ
JAZZ III 1.2	(GE)	07/08→						ES35240DJ
JAZZ III 1.4	(GE)	07/08→						ES35240DJ
JAZZ III 1.5 i	(GE)	07/08→						ES35240DJ
LOGO 1.3	(GA3)	03/99→03/02						ES45300S
STREAM 1.7 16V	(RN)	05/01→						ES45300S
STREAM 2.0 16V	(RN)	05/01→						ES45300S
S2000 2.0 Vtec	(AP)	10/03→						ES45300D
HYUNDAI								
ACCENT 1.3	(X-3)	10/94→01/00						ES45300D
ACCENT 1.3	(X-3)	10/94→01/00						ES45300D
ACCENT 1.3 i 12V	(X-3)	10/94→01/00						ES45300D
ACCENT 1.5 i 12V	(X-3)	10/94→01/00						ES45300D
ACCENT 1.5 i 16V	(X-3)	12/95→01/00						ES45300D
ACCENT Saloon 1.3	(X-3)	10/94→01/00						ES45300D
ACCENT Saloon 1.3	(X-3)	10/94→01/00						ES45300D
ACCENT Saloon 1.3 i 12V	(X-3)	10/94→01/00						ES45300D
ACCENT Saloon 1.5 i 12V	(X-3)	10/94→01/00						ES45300D
ACCENT Saloon 1.5 i 16V	(X-3)	10/95→01/00						ES45300D
ACCENT 1.6	(LC)	12/02→		RUN50D	MAG50D-MAG45D	ETS50ND-ETS45ND	ETS50D3N-ETS50D4N	436210ES
ACCENT 1.4 GL	(MC)	11/05→		RUN50D	MAG50D-MAG45D	ETS50ND-ETS45ND	ETS50D3N-ETS50D4N	436210ES
ACCENT 1.6 GLS	(MC)	11/05→		RUN50D	MAG50D-MAG45D	ETS50ND-ETS45ND	ETS50D3N-ETS50D4N	436210ES
ACCENT Saloon 1.4 GL	(MC)	11/05→		RUN50D	MAG50D	ETS50ND	ETS50D3N-ETS50D4N	
ACCENT Saloon 1.6 GLS	(MC)	11/05→		RUN50D	MAG50D-MAG45D	ETS50ND-ETS45ND	ETS50D3N-ETS50D4N	436210ES
COUPE 2.0	(GK)	08/01→		RUN62D	MAG62D	ETS62ND	ETS60D3N	438320ES
COUPE 2.0	(GK)	03/02→		RUN62D	MAG62D	ETS62ND	ETS60D3N	438320ES
COUPE 2.0 GLS	(GK)	02/03→		RUN62D	MAG62D	ETS62ND	ETS60D3N	438320ES
COUPE 2.7 V6	(GK)	03/02→		RUN62D	MAG62D	ETS62ND	ETS60D3N	438320ES

	Design		START	RUN	MAGIS	ETS	ETS alternative	ES
HYUNDAI								
ELANTRA 1.6	(XD)	06/00→07/06		RUN50D	MAG50D	ETS50ND	ETS50D3N-ETS50D4N	
ELANTRA 1.6	(XD)	05/03→		RUN50D	MAG50D	ETS50ND	ETS50D3N-ETS50D4N	
ELANTRA 1.6	(XD)	06/00→		RUN50D	MAG50D	ETS50ND	ETS50D3N-ETS50D4N	
ELANTRA 1.6	(XD)	09/03→		RUN50D	MAG50D	ETS50ND	ETS50D3N-ETS50D4N	
ELANTRA 1.8	(XD)	06/00→07/03		RUN50D	MAG50D	ETS50ND	ETS50D3N-ETS50D4N	
ELANTRA 1.8	(XD)	06/00→		RUN50D	MAG50D	ETS50ND	ETS50D3N-ETS50D4N	
ELANTRA 1.8	(XD)	11/02→		RUN62D	MAG62D	ETS62ND	ETS60D3N	438320ES
ELANTRA 2.0	(XD)	06/00→		RUN62D	MAG62D	ETS62ND	ETS60D3N	438320ES
ELANTRA 2.0	(XD)	06/00→		RUN62D	MAG62D	ETS62ND	ETS60D3N	438320ES
ELANTRA 2.0	(XD)	10/03→		RUN62D	MAG62D	ETS62ND	ETS60D3N	438320ES
ELANTRA Saloon 1.6	(XD)	06/00→07/06		RUN50D	MAG50D	ETS50ND	ETS50D3N-ETS50D4N	
ELANTRA Saloon 1.6	(XD)	05/03→		RUN50D	MAG50D-MAG45D	ETS50ND-ETS45ND	ETS50D3N-ETS50D4N	436210ES
ELANTRA Saloon 1.6	(XD)	06/00→		RUN50D	MAG50D-MAG45D	ETS50ND-ETS45ND	ETS50D3N-ETS50D4N	436210ES
ELANTRA Saloon 1.8	(XD)	06/00→07/03		RUN62D	MAG62D	ETS62ND	ETS60D3N	438320ES
ELANTRA Saloon 1.8	(XD)	06/00→		RUN62D	MAG62D	ETS62ND	ETS60D3N	438320ES
ELANTRA Saloon 2.0	(XD)	06/00→		RUN62D	MAG62D	ETS62ND	ETS60D3N	438320ES
ELANTRA Saloon 2.0	(XD)	06/00→		RUN62D	MAG62D	ETS62ND	ETS60D3N	438320ES
ELANTRA Saloon 2.0	(XD)	10/03→		RUN62D	MAG62D	ETS62ND	ETS60D3N	438320ES
GALLOPER I 2.5 TDI		08-91→07-98			MAG100D	ETS100ND-ETS100KD	ETS100D2N-ETSD1N	
GALLOPER I 3.0 I V6 24V		08-91→07-98			MAG100D	ETS100ND-ETS100KD	ETS100D2N-ETSD1N	
GALLOPER II 2.5 TCi D		08-98→			MAG100D	ETS100ND-ETS100KD	ETS100D2N-ETSD1N	
H-1 Autobus 2.5 CRDi		06-06→			MAG100D	ETS100ND-ETS100KD	ETS100D2N-ETSD1N	
GETZ 1.1	(TB)	09/02→		RUN50D	MAG50D-MAG45D	ETS50ND-ETS45ND	ETS50D3N-ETS50D4N	436210ES
GETZ 1.1	(TB)	09/05→		RUN50D	MAG50D-MAG45D	ETS50ND-ETS45ND	ETS50D3N-ETS50D4N	436210ES
GETZ 1.3	(TB)	09/02→		RUN50D	MAG50D-MAG45D	ETS50ND-ETS45ND	ETS50D3N-ETS50D4N	436210ES
GETZ 1.3	(TB)	09/03→		RUN50D	MAG50D-MAG45D	ETS50ND-ETS45ND	ETS50D3N-ETS50D4N	436210ES
GETZ 1.4	(TB)	08/05→		RUN50D	MAG50D-MAG45D	ETS50ND-ETS45ND	ETS50D3N-ETS50D4N	436210ES
GETZ 1.5	(TB)	08/02→07/05		RUN50D	MAG50D-MAG45D	ETS50ND-ETS45ND	ETS50D3N-ETS50D4N	436210ES
GETZ 1.6	(TB)	09/02→		RUN50D	MAG50D-MAG45D	ETS50ND-ETS45ND	ETS50D3N-ETS50D4N	436210ES
GETZ 1.6	(TB)	08/05→		RUN50D	MAG50D-MAG45D	ETS50ND-ETS45ND	ETS50D3N-ETS50D4N	436210ES
GRANDEUR 2.7	(TG)	05/06→		RUN72D	MAG74D	ETS74ND	ETS70D1N-ETS74DI	476420ES
GRANDEUR 3.3	(TG)	04/05→		RUN72D	MAG74D	ETS74ND	ETS70D1N-ETS74DI	476420ES
GRANDEUR 3.8	(TG)	06/05→		RUN72D	MAG74D	ETS74ND	ETS70D1N-ETS74DI	476420ES
H-1 Box 2.4		03/00→				ETS63NS		
H-1 Cargo 2.5 CRDi		02/08→			MAG72DB	ETS71NDB		
H 100 D		07-93→						ES100720S
H 200 D		98-→						ES100720S
H-1 Autobus 2.5 TD		11-01→05-06						ES100720S
i20 1.2		09/08→		RUN50D	MAG50D	ETS50ND	ETS50D3N-ETS50D4N	
i20 1.4		09/08→		RUN50D	MAG50D	ETS50ND	ETS50D3N-ETS50D4N	
i20 1.6		09/08→		RUN50D	MAG50D	ETS50ND	ETS50D3N-ETS50D4N	
i30 1.4		10/07→		RUN50D	MAG50D	ETS50ND	ETS50D3N-ETS50D4N	
i30 1.4		10/07→		RUN50D	MAG50D	ETS50ND	ETS50D3N-ETS50D4N	
i30 1.4 ISG	Stop/Start , A	07/09→	SST63D					
i30 1.6		10/07→		RUN50D	MAG50D	ETS50ND	ETS50D3N-ETS50D4N	
i30 1.6		10/07→		RUN50D	MAG50D	ETS50ND	ETS50D3N-ETS50D4N	
i30 1.6		02/08→		RUN50D	MAG50D	ETS50ND	ETS50D3N-ETS50D4N	

	Design		START	RUN	MAGIS	ETS	ETS alternative	ES
HYUNDAI								
i30 1.6 ISG	Stop/Start , A	07/09→	SST63D					
i30 2.0		10/07→		RUN62D	MAG62D	ETS62ND	ETS60D3N	438320ES
i30 2.0 CRDi ISG	Stop/Start , A	07/09→	SST72D					
i30 CW Estate 1.6		02/08→		RUN50D	MAG50D	ETS50ND	ETS50D3N-ETS50D4N	
i30 CW Estate 1.6		02/08→		RUN50D	MAG50D	ETS50ND	ETS50D3N-ETS50D4N	
i30 CW Estate 1.6		02/08→		RUN50D	MAG50D	ETS50ND	ETS50D3N-ETS50D4N	
i30 CW Estate 2.0		02/08→		RUN62D	MAG62D	ETS62ND	ETS60D3N	438320ES
LANTRA I 1.5 i.e.	(J-1)	10/90→11/95						ES45300S
LANTRA I 1.6 i.e. 16V	(J-1)	10/90→11/95						ES45300S
LANTRA I 1.6 i.e. 16V	(J-1)	10/90→11/95						ES45300S
LANTRA I 1.8 i.e. 16V	(J-1)	10/90→11/95						ES45300S
LANTRA II 1.5 12V	(J-2)	12/96→09/00						ES45300S
LANTRA II 1.6 i	(J-2)	11/95→09/00		RUN50D	MAG50D	ETS50ND	ETS50D3N-ETS50D4N	
LANTRA II 1.6 16V	(J-2)	11/95→09/00						ES45300S
LANTRA II 1.8 16V	(J-2)	11/95→09/00		RUN62D	MAG62D	ETS62ND	ETS60D3N	438320ES
LANTRA II 2.0 16V	(J-2)	08/96→09/00		RUN62D	MAG62D	ETS62ND	ETS60D3N	438320ES
LANTRA II 2.0	(J-2)	04/97→05/00		RUN62D	MAG62D	ETS62ND	ETS60D3N	438320ES
LANTRA II Wagon 1.5 12V	(J2)	04/97→						ES45300S
LANTRA II Wagon 1.6 i	(J2)	02/96→						ES45300S
LANTRA II Wagon 1.6 16V	(J2)	02/96→						ES45300S
LANTRA II Wagon 1.8 16V	(J2)	02/96→						ES45300S
LANTRA II Wagon 2.0 16V	(J2)	12/96→		RUN62D	MAG62D	ETS62ND	ETS60D3N	438320ES
LANTRA II Wagon 2.0	(J2)	04/97→05/00		RUN62D	MAG62D	ETS62ND	ETS60D3N	438320ES
MATRIX 1.6	(FC)	01/02→12/05		RUN62D	MAG62D	ETS62ND	ETS60D3N	438320ES
MATRIX 1.6	(FC)	06/01→		RUN62D	MAG62D	ETS62ND	ETS60D3N	438320ES
PONY/EXCEL Saloon 1.3	(X-2)	12/92→09/94						ES45300S
PONY/EXCEL Saloon 1.3	(X-2)	01/90→01/95						ES45300S
PONY/EXCEL Saloon 1.5	(X-2)	01/90→01/95						ES45300S
PONY/EXCEL Saloon 1.5 i	(X-2)	01/90→01/95						ES45300S
PONY/EXCEL Saloon 1.5 i	(X-2)	01/90→01/95						ES45300S
SANTA FE 2.0 CRDI TD 4WD		02-01→			MAG100D	ETS100ND-ETS100KD	ETS100D2N-ETSD1N	
SANTA FÉ 2.2 CRDi, 2.2 CRDi 4x4, 2.2 CRDi GLS, 2.2 CRDi GLS 4x4		03-06→			MAG100D	ETS100ND-ETS100KD	ETS100D2N-ETSD1N	
SANTA FE 2.7	(SM)	10/05→		RUN62D	MAG62D	ETS62ND	ETS60D3N	438320ES
SANTA FE 2.7 4x4	(SM)	10/05→		RUN62D	MAG62D	ETS62ND	ETS60D3N	438320ES
SANTA FE 3.3 4x4	(SM)	03/06→		RUN72D	MAG74D	ETS74ND	ETS70D1N-ETS74DI	476420ES
SANTA FE 3.5	(SM)	09/03→02/06		RUN72D	MAG74D	ETS74ND	ETS70D1N-ETS74DI	476420ES
SANTA FE 3.5 4x4	(SM)	09/03→02/06		RUN72D	MAG74D	ETS74ND	ETS70D1N-ETS74DI	476420ES
SANTA FE 2.7	(CM)	03/06→		RUN62D	MAG62D	ETS62ND	ETS60D3N	438320ES
SANTA FE 2.7 4x4	(CM)	03/06→		RUN62D	MAG62D	ETS62ND	ETS60D3N	438320ES
SANTA FE 2.7 V6 GLS	(CM)	03/06→		RUN62D	MAG62D	ETS62ND	ETS60D3N	438320ES
SANTA FE 2.7 V6 GLS 4x4	(CM)	03/06→		RUN62D	MAG62D	ETS62ND	ETS60D3N	438320ES
SANTA FE 3.3 Dynamic 4x4	(CM)	03/06→		RUN72D	MAG74D	ETS74ND	ETS70D1N-ETS74DI	476420ES
S COUPE 1.5 i	(SLC)	02/90→05/96						ES45300S
S COUPE 1.5 i	(SLC)	04/92→05/96						ES45300S
S COUPE 1.5 i Turbo	(SLC)	04/91→05/96						ES45300S
SONATA II 1.8 i	(Y-3)	05/93→06/98				ETS55NS		

	Design		START	RUN	MAGIS	ETS	ETS alternative	ES
HYUNDAI								
SONATA II 2.0 i	(Y-3)	08/96→06/98				ETS55NS		
SONATA II 2.0 i	(Y-3)	06/94→08/96				ETS55NS		
SONATA II 2.0 i 16V	(Y-3)	06/96→06/98				ETS55NS		
SONATA II 2.0	(Y-3)	07/94→10/94				ETS55NS		
SONATA II 2.0 i 16V	(Y-3)	05/93→06/98				ETS55NS		
SONATA II 3.0 i V6	(Y-3)	05/93→06/98				ETS55NS		
SONATA III 2.0 16V	(EF)	06/98→10/01		RUN62D	MAG62D	ETS62ND	ETS60D3N	438320ES
SONATA III 2.5 V6 24V	(EF)	06/98→10/01		RUN62D	MAG62D	ETS62ND	ETS60D3N	438320ES
SONATA III 2.4 16V	(EF)	03/98→10/01		RUN62D	MAG62D	ETS62ND	ETS60D3N	438320ES
SONATA IV 2.0	(EU4)	10/01→11/04		RUN62D	MAG62D	ETS62ND	ETS60D3N	438320ES
SONATA IV 2.7 V6	(EU4)	10/01→11/04		RUN62D	MAG62D	ETS62ND	ETS60D3N	438320ES
SONATA IV 2.7 V6	(EU4)	11/02→11/04				ETS55NS		
SONATA V 2.0 CRDi		02-06→			MAG100D	ETS100ND-ETS100KD	ETS100D2N-ETSD1N	
STAREX 2.4	(H1)	06/97→				ETS63NS		
STAREX 2.4 4WD	(H1)	02/98→				ETS63NS		
STAREX, H1		06-97→						ES100720S
TRAJET 2.0	(FO)	01/04→		RUN62D	MAG62D	ETS62ND	ETS60D3N	438320ES
TRAJET 2.0	(FO)	03/00→		RUN62D	MAG62D	ETS62ND	ETS60D3N	438320ES
TRAJET 2.7 V6	(FO)	09/00→		RUN62D	MAG62D	ETS62ND	ETS60D3N	438320ES
XG 25	(XG)	12/98→		RUN62D	MAG62D	ETS62ND	ETS60D3N	438320ES
XG 30/300	(XG)	12/98→		RUN62D	MAG62D	ETS62ND	ETS60D3N	438320ES
XG 3.0	(XG)	09/99→09/03		RUN62D	MAG62D	ETS62ND	ETS60D3N	438320ES
XG 350	(XG)	04/03→		RUN62D	MAG62D	ETS62ND	ETS60D3N	438320ES
INNOCENTI								
ELBA 1.3 (146CW)	(146)	08/91→		RUN50D	MAG50D-MAG45D	ETS50ND-ETS45ND	ETS50D3N-ETS50D4N	436210ES
ELBA 1.4 i.e. (146EN, 146EQ)	(146)	09/94→12/96				ETS40NS		
ELBA 1.5 i.e. (146C9)	(146)	08/92→09/94		RUN50D	MAG50D-MAG45D	ETS50ND-ETS45ND	ETS50D3N-ETS50D4N	436210ES
ELBA 1.6 i.e. (146EO, 146ER)	(146)	09/94→12/96		RUN50D	MAG50D-MAG45D	ETS50ND-ETS45ND	ETS50D3N-ETS50D4N	436210ES
ELBA 1.7 D (146DI, 146EI)	(146)	08/91→12/96		RUN62D	MAG62D	ETS62ND	ETS60D3N	438320ES
KORAL 45		01/90→12/92		RUN44D			ETS44D2N	
KORAL 55		01/90→12/92		RUN44D			ETS44D2N	
MINI 0.65		01/90→01/95						ES45330S
IRMSCHER								
COUPE 1.6 16V		01/97→		RUN62D	MAG62D	ETS62ND	ETS60D3N	438320ES
SENATOR 4.0 24V		01/90→12/96		RUN72D	MAG74D	ETS74ND	ETS70D1N-ETS74DI	476420ES
OMEGA Caravan 4.0 i		01/90→12/96		RUN72D	MAG74D	ETS74ND	ETS70D1N-ETS74DI	476420ES
IVECO								
MASSIF Station Wagon 3.0 HPI		10/08→		RUN95D		ETS92ND-ETS95D1N		434440ES
MASSIF Station Wagon 3.0 HPT		10/08→		RUN95D		ETS92ND-ETS95D1N		434440ES
MASSIF Pickup 3.0 HPI		10/08→		RUN95D		ETS92ND-ETS95D1N		434440ES
MASSIF Pickup 3.0 HPT		10/08→		RUN95D		ETS92ND-ETS95D1N		434440ES
MASSIF Single Cab 3.0 HPI		10/08→		RUN95D		ETS92ND-ETS95D1N		434440ES
MASSIF Single Cab 3.0 HPT		10/08→		RUN95D		ETS92ND-ETS95D1N		434440ES

	Design		START	RUN	MAGIS	ETS	ETS alternative	ES
JAGUAR								
S-TYPE 2.5 V6	(CCX)	04/02→		RUN95D		ETS92ND-ETS95D1N		434440ES
S-TYPE 3.0 V6	(CCX)	01/99→		RUN95D		ETS92ND-ETS95D1N		434440ES
S-TYPE 4.0 V8	(CCX)	01/99→04/02		RUN95D		ETS92ND-ETS95D1N		434440ES
S-TYPE 4.2 V8	(CCX)	04/02→		RUN95D		ETS92ND-ETS95D1N		434440ES
S-TYPE R 4,2 V8	(CCX)	04/02→		RUN95D		ETS92ND-ETS95D1N		434440ES
S-TYPE 2.7 D	(CCX)	06/04→		RUN95D		ETS92ND-ETS95D1N		434440ES
XF 3.0		03/08→			MAG82D	ETS80ND		
XF 4.2		03/08→			MAG82D	ETS80ND		
XF 4.2 Kompressor		03/08→			MAG82D	ETS80ND		
XF 5.0		03/09→			MAG82D	ETS80ND		
XF 5.0 Kompressor		03/09→			MAG82D	ETS80ND		
XF 2.7 D		03/08→			MAG82D	ETS80ND		
XF 3.0 D		03/09→			MAG82D	ETS80ND		
XF 3.0 D		03/09→			MAG82D	ETS80ND		
X-TYPE 2.0 D	(CF1)	07/03→10/05		RUN95D		ETS92ND-ETS95D1N		434440ES
X-TYPE Estate 3.0		02/04→			MAG82D	ETS80ND		
X-TYPE Estate 2.0 D		02/04→10/05		RUN95D		ETS92ND-ETS95D1N		434440ES
XJ 6 3.2 24V	(XJ 40, 81)	09/90→11/94		RUN62D	MAG62D	ETS62ND	ETS60D3N	438320ES
XJ V12 6.0	(XJ 40, 81)	03/93→11/94		RUN72D	MAG74D	ETS74ND	ETS70D1N-ETS74DI	476420ES
XJ 6 3.2	(X300)	11/94→07/97		RUN62D	MAG62D	ETS62ND	ETS60D3N	438320ES
XJ 6 Sovereign 4.0	(X300)	11/94→07/97		RUN62D	MAG62D	ETS62ND	ETS60D3N	438320ES
XJ R Super Charged 4.0	(X300)	11/94→07/97		RUN62D	MAG62D	ETS62ND	ETS60D3N	438320ES
XJ 12 6.0	(X300)	11/94→07/97		RUN72D	MAG74D	ETS74ND	ETS70D1N-ETS74DI	476420ES
XJ 8 3.2	(NAW, NBW)	07/97→05/03		RUN72D	MAG74D	ETS74ND	ETS70D1N-ETS74DI	476420ES
XJ 8 4.0	(NAW, NBW)	07/97→05/03		RUN72D	MAG74D	ETS74ND	ETS70D1N-ETS74DI	476420ES
XJ R 4.0	(NAW, NBW)	07/97→05/03		RUN72D	MAG74D	ETS74ND	ETS70D1N-ETS74DI	476420ES
XJ 6 3.0	(X350, X358)	05/03→		RUN62D	MAG62D	ETS62ND	ETS60D3N	438320ES
XJ 8 3.5	(X350, X358)	05/03→		RUN62D	MAG62D	ETS62ND	ETS60D3N	438320ES
XJ 8 4.2	(X350, X358)	05/03→		RUN62D	MAG62D	ETS62ND	ETS60D3N	438320ES
XJ R 4.2	(X350, X358)	05/03→		RUN62D	MAG62D	ETS62ND	ETS60D3N	438320ES
XJ 6 2,7 D	(X350, X358)	10/05→		RUN95D		ETS92ND-ETS95D1N		434440ES
XJS Coupe 4.0		05/91→09/94			MAG72DB	ETS71NDB		
XJS Coupe 4.0		07/94→03/96		RUN95D		ETS92ND-ETS95D1N		434440ES
XJS Coupe 5.3		05/91→08/93			MAG72DB	ETS71NDB		
XJS Coupe 6.0		05/93→03/96		RUN95D		ETS92ND-ETS95D1N		434440ES
XJSC Convertible 4.0		05/91→09/94			MAG72DB	ETS71NDB		
XJSC Convertible 4.0		07/94→03/96		RUN95D		ETS92ND-ETS95D1N		434440ES
XJSC Convertible 5.3		05/91→08/93			MAG72DB	ETS71NDB		
XJSC Convertible 6.0		05/93→03/96		RUN95D		ETS92ND-ETS95D1N		434440ES
XK 8 Coupe 4.0	(QEV)	03/96→		RUN95D		ETS92ND-ETS95D1N		434440ES
XK 8 Coupe 4.0	(QEV)	05/96→07/99		RUN95D		ETS92ND-ETS95D1N		434440ES
XK 8 Coupe 4.0	(QEV)	02/98→		RUN95D		ETS92ND-ETS95D1N		434440ES
XK 8 Coupe 4.2	(QEV)	08/02→		RUN95D		ETS92ND-ETS95D1N		434440ES
XK 8 Coupe R 4,2	(QEV)	08/02→		RUN95D		ETS92ND-ETS95D1N		434440ES
XK Coupe 3.5 XK		07/07→		RUN95D		ETS92ND-ETS95D1N		434440ES
XK Coupe 4.2 XK8		03/06→		RUN95D		ETS92ND-ETS95D1N		434440ES
XK Coupe 4.2 XKR		03/06→		RUN95D		ETS92ND-ETS95D1N		434440ES

	Design		START	RUN	MAGIS	ETS	ETS alternative	ES
JAGUAR								
XK Coupe 4.2 XKR		03/06→		RUN95D		ETS92ND-ETS95D1N		434440ES
XK Coupe 5.0 XKR		01/09→		RUN95D				
XK Coupe 5.0 XKR		01/09→		RUN95D				
XK Convertible 3.6		10/07→		RUN95D		ETS92ND-ETS95D1N		434440ES
XK Convertible 4.2 XK8		03/06→		RUN95D		ETS92ND-ETS95D1N		434440ES
XK Convertible 4.2 XKR		03/06→		RUN95D		ETS92ND-ETS95D1N		434440ES
XK Convertible 5.0 XKR		01/09→		RUN95D		ETS92ND-ETS95D1N		434440ES
XK Convertible 5.0 XKR		01/09→		RUN95D				
JEEP								
CHEROKEE 2.5 SE	(XJ)	10/96→09/99				ETS63NS		
CHEROKEE 2.5 i	(XJ)	11/96→				ETS63NS		
CHEROKEE 2.5	(XJ)	10/90→09/96				ETS63NS		
CHEROKEE 2.5 i 4x4	(XJ)	12/91→				ETS63NS		
CHEROKEE 4.0 i	(XJ)	07/98→		RUN72D	MAG74D	ETS74ND	ETS70D1N-ETS74DI	476420ES
CHEROKEE 4.0 i	(XJ)	02/99→		RUN72D	MAG74D	ETS74ND	ETS70D1N-ETS74DI	476420ES
CHEROKEE 4.0 i	(XJ)	01/95→				ETS63NS		
CHEROKEE 4.0 i	(XJ)	12/91→				ETS63NS		
CHEROKEE 2.5	(XJ)	10/95→		RUN72D	MAG74D	ETS74ND	ETS70D1N-ETS74DI	476420ES
CHEROKEE 2.5 Tdi 4x4	(XJ)	10/96→09/01		RUN72D	MAG74D	ETS74ND	ETS70D1N-ETS74DI	476420ES
CHEROKEE 2.4 Laredo	(KJ)	10/01→09/04		RUN72D	MAG74D	ETS74ND	ETS70D1N-ETS74DI	476420ES
CHEROKEE 2.4	(KJ)	09/01→		RUN72D	MAG74D	ETS74ND	ETS70D1N-ETS74DI	476420ES
CHEROKEE 3.7 V6	(KJ)	08/03→		RUN95D		ETS92ND-ETS95D1N		434440ES
CHEROKEE 3.7 V6	(KJ)	09/01→		RUN72D	MAG74D	ETS74ND	ETS70D1N-ETS74DI	476420ES
CHEROKEE 3.7 Laredo	(KJ)	10/01→09/04		RUN72D	MAG74D	ETS74ND	ETS70D1N-ETS74DI	476420ES
CHEROKEE 2.5 CRD	(KJ)	09/01→		RUN72D	MAG74D	ETS74ND	ETS70D1N-ETS74DI	476420ES
CHEROKEE 2.8 CRD	(KJ)	11/02→		RUN72D	MAG74D	ETS74ND	ETS70D1N-ETS74DI	476420ES
CHEROKEE 2.8 CRD	(KK)	05/08→		RUN72D	MAG74D	ETS74ND	ETS70D1N-ETS74DI	476420ES
COMMANDER 3.7 V6		09/05→		RUN72D	MAG74D	ETS74ND	ETS70D1N-ETS74DI	476420ES
COMMANDER 4.7 V8		09/05→		RUN72D	MAG74D	ETS74ND	ETS70D1N-ETS74DI	476420ES
COMMANDER 5.7 V8		09/05→		RUN72D	MAG74D	ETS74ND	ETS70D1N-ETS74DI	476420ES
COMMANDER 3.0 CRD		04/06→			MAG88DB	ETS85NDB	ETS88D1N	ES90NDB
COMPASS 2.0 CRD		08/06→		RUN72D	MAG74D	ETS74ND	ETS70D1N-ETS74DI	476420ES
COMPASS 2.0 CRD 4x4		09/06→		RUN72D	MAG74D	ETS74ND	ETS70D1N-ETS74DI	476420ES
GRAND CHEROKEE I 4.0 i (Z)	(Z)	10/95→04/99		RUN72D	MAG74D	ETS74ND	ETS70D1N-ETS74DI	476420ES
GRAND CHEROKEE I 4.0 i (ZJ)	(Z)	09/91→04/99		RUN72D	MAG74D	ETS74ND	ETS70D1N-ETS74DI	476420ES
GRAND CHEROKEE I 4.0 i (ZJ)	(Z)	09/91→04/99		RUN72D	MAG74D	ETS74ND	ETS70D1N-ETS74DI	476420ES
GRAND CHEROKEE I 5.9 i	(Z)	08/97→04/99						ES70540S
GRAND CHEROKEE I 2.5 TD (Z)	(Z)	10/95→04/99						ES70540S
GRAND CHEROKEE II 3.7 Laredo	(WJ, WG)	10/04→09/05		RUN72D	MAG74D	ETS74ND	ETS70D1N-ETS74DI	476420ES
GRAND CHEROKEE II 4.0	(WJ, WG)	10/98→09/04		RUN72D	MAG74D	ETS74ND	ETS70D1N-ETS74DI	476420ES
GRAND CHEROKEE II 4.0 4x4	(WJ, WG)	04/99→		RUN72D	MAG74D	ETS74ND	ETS70D1N-ETS74DI	476420ES
GRAND CHEROKEE II 4.7 V8	(WJ, WG)	04/99→08/00		RUN72D	MAG74D	ETS74ND	ETS70D1N-ETS74DI	476420ES
GRAND CHEROKEE II 4.7 V8	(WJ, WG)	08/00→		RUN72D	MAG74D	ETS74ND	ETS70D1N-ETS74DI	476420ES
GRAND CHEROKEE II 4.7	(WJ, WG)	10/04→		RUN72D	MAG74D	ETS74ND	ETS70D1N-ETS74DI	476420ES
GRAND CHEROKEE II 4.7 V8 4x4	(WJ, WG)	06/03→		RUN72D	MAG74D	ETS74ND	ETS70D1N-ETS74DI	476420ES
GRAND CHEROKEE II 4.7 V8	(WJ, WG)	10/01→		RUN72D	MAG74D	ETS74ND	ETS70D1N-ETS74DI	476420ES

	Design		START	RUN	MAGIS	ETS	ETS alternative	ES
JEEP								
GRAND CHEROKEE II 2.7 CRD 4x4	(WJ, WG)	10/01→		RUN95D		ETS92ND-ETS95D1N		434440ES
GRAND CHEROKEE II 2.7 CRD Laredo	(WJ, WG)	10/04→09/05		RUN95D		ETS92ND-ETS95D1N		434440ES
GRAND CHEROKEE II 2.7 CRD 4x4	(WJ, WG)	10/04→09/05		RUN95D		ETS92ND-ETS95D1N		434440ES
GRAND CHEROKEE II 3.1 TD	(WJ, WG)	04/99→		RUN95D		ETS92ND-ETS95D1N		434440ES
GRAND CHEROKEE III 3.7 V6		06/05→		RUN72D	MAG74D	ETS74ND	ETS70D1N-ETS74DI	476420ES
GRAND CHEROKEE III 4.7 V8		06/05→		RUN72D	MAG74D	ETS74ND	ETS70D1N-ETS74DI	476420ES
GRAND CHEROKEE III 5.7 V8		06/05→		RUN72D	MAG74D	ETS74ND	ETS70D1N-ETS74DI	476420ES
GRAND CHEROKEE III 6.1 V8		03/06→		RUN72D	MAG74D	ETS74ND	ETS70D1N-ETS74DI	476420ES
GRAND CHEROKEE III 3.0 CRD		06/05→		RUN95D		ETS92ND-ETS95D1N		434440ES
WRANGLER II 2.4	(TJ)	11/02→				ETS55NS		
WRANGLER II 2.5	(TJ)	08/96→				ETS55NS		
KIA								
BESTA 2.2 D					MAG100D	ETS100ND-ETS100KD	ETS100D2N-ETSD1N	
CARENS I 1.8 i	(FC)	11/00→07/02		RUN62D	MAG62D	ETS62ND	ETS60D3N	438320ES
CARENS II 1.6	(FJ)	07/02→		RUN62D	MAG62D	ETS62ND	ETS60D3N	438320ES
CARENS II 1.8	(FJ)	07/02→		RUN62D	MAG62D	ETS62ND	ETS60D3N	438320ES
CARENS II 2.0 CVVT	(FJ)	08/04→		RUN62D	MAG62D	ETS62ND	ETS60D3N	438320ES
CARENS III 2.0 CVVT	(UN)	09/06→		RUN62D	MAG62D	ETS62ND	ETS60D3N	438320ES
CARENS III 2.0 CRDi	(UN)	08/09→		RUN72D				
CARNIVAL 2.9 TD		03-99→10-01						ES100720S
CERES D								ES100720S
PRO CEE'D 1.4	(ED)	02/08→			MAG62DB	ETS60NDB-ETS50NDB		ES60NDB
PRO CEE'D 1.4 ISG	Stop/Start , A	01/09→	SST63D					
PRO CEE'D 1.6 CRDi 90	(ED)	02/08→		RUN62D	MAG62D	ETS62ND	ETS60D3N	438320ES
PRO CEE'D 1.6 CRDi 115	(ED)	02/08→		RUN62D	MAG62D	ETS62ND	ETS60D3N	438320ES
PRO CEE'D 1.6 ISG	Stop/Start , A	01/09→	SST63D					
PRO CEE'D 2.0 CRDi ISG	Stop/Start , A	01/09→	SST72D					
CERATO Saloon 1.6	(LD)	05/06→		RUN62D	MAG62D	ETS62ND	ETS60D3N	438320ES
CERATO Saloon 1.8 CVVT	(LD)	05/05→		RUN62D	MAG62D	ETS62ND	ETS60D3N	438320ES
CERATO 2.0	(LD)	04/04→		RUN62D	MAG62D	ETS62ND	ETS60D3N	438320ES
H 3500								ES100720S
MAGENTIS 2.0 CRDi		04-06→			MAG100D	ETS100ND-ETS100KD	ETS100D2N-ETSD1N	
MAGENTIS 2.0	(GD)	05/01→		RUN62D	MAG62D	ETS62ND	ETS60D3N	438320ES
MAGENTIS 2.5 V6	(GD)	05/01→		RUN62D	MAG62D	ETS62ND	ETS60D3N	438320ES
MAGENTIS 2.0	(MG)	11/05→		RUN62D	MAG62D	ETS62ND	ETS60D3N	438320ES
MAGENTIS 2.0	(MG)	07/09→		RUN62D				
MAGENTIS 2.7	(MG)	11/05→		RUN62D	MAG62D	ETS62ND	ETS60D3N	438320ES
MAGENTIS 2.7 V6	(MG)	07/09→		RUN62D				
PREGIO		10-97→						ES100720S
ROADSTER 1.8		08/99→				ETS55NS		
ROCSTA D	01-93				MAG100D	ETS100ND-ETS100KD	ETS100D2N-ETSD1N	
SHUMA 1.5 i 16V	(FB)	10/97→03/01		RUN50D	MAG50D	ETS50ND	ETS50D3N-ETS50D4N	
SHUMA 1.6	(FB)	01/01→12/01		RUN62D	MAG62D	ETS62ND	ETS60D3N	438320ES
SHUMA 1.8 i 16V	(FB)	10/97→03/01		RUN62D	MAG62D	ETS62ND	ETS60D3N	438320ES
SHUMA Saloon 1.5	(FB)	03/96→12/98		RUN50D	MAG50D	ETS50ND	ETS50D3N-ETS50D4N	
SHUMA Saloon 1.5 i 16V	(FB)	10/97→10/01		RUN50D	MAG50D	ETS50ND	ETS50D3N-ETS50D4N	

	Design		START	RUN	MAGIS	ETS	ETS alternative	ES
KIA								
SHUMA II 1.6	(FB)	05/01→08/04		RUN62D	MAG62D	ETS62ND	ETS60D3N	438320ES
SHUMA II 1.8	(FB)	04/03→08/04		RUN62D	MAG62D	ETS62ND	ETS60D3N	438320ES
SHUMA II Saloon 1.6	(FB)	05/01→05/04		RUN62D	MAG62D	ETS62ND	ETS60D3N	438320ES
SORENTO 2.5 D		06-02→						ES100720S
SORENTO 2.4	08-02				MAG100D	ETS100ND-ETS100KD	ETS100D2N-ETSD1N	
SOUL 1.6	(AM)	02/09→			MAG62DB	ETS60NDB-ETS50NDB		ES60NDB
SOUL 1.6 CRDi	(AM)	02/09→		RUN62D	MAG62D	ETS62ND	ETS60D3N	438320ES
SPORTAGE 2.0 TDI		01-94→08-03						ES100720S
SPORTAGE 2.0 i 4WD	(K00)	04/94→08/99				ETS55NS		
SPORTAGE 2.0 4WD	(K00)	10/00→08/03				ETS55NS		
SPORTAGE 2.0 i 16V 4WD	(K00)	04/94→08/03		RUN62D	MAG62D	ETS62ND	ETS60D3N	438320ES
SPORTAGE 2.0 i 16V	(JE_)	09/04→		RUN62D	MAG62D	ETS62ND	ETS60D3N	438320ES
SPORTAGE 2.0 16V 4WD	(JE_)	09/04→		RUN62D	MAG62D	ETS62ND	ETS60D3N	438320ES
VENGA 1.4 16 V ISG	Stop/Start , A	02/10→	SST63D					
VENGA 1.6 16 V ISG	Stop/Start , A	02/10→	SST63D					
VENGA 1.4 CRDi ISG	Stop/Start , A	02/10→	SST72D					
VENGA 1.6 CRDi ISG	Stop/Start , A	02/10→	SST72D					
LADA								
110 1.5		01/95→				ETS55NS		
110 1.5		10/00→				ETS55NS		
110 1.5		01/95→				ETS55NS		
110 1.5 16V		10/00→				ETS55NS		
110 1.5 16V		01/95→				ETS55NS		
110 1.6		01/00→				ETS55NS		
110 1.6		01/00→				ETS55NS		
110 2.0 i		08/96→				ETS55NS		
110 Wankel		06/97→				ETS55NS		
111 1.5		10/00→				ETS55NS		
111 1.5		01/96→				ETS55NS		
111 1.5 16V		10/00→				ETS55NS		
111 1.5 16V		01/95→				ETS55NS		
111 1.6		01/05→				ETS55NS		
111 1.6		03/06→				ETS55NS		
112 1.5		01/95→				ETS55NS		
112 1.5		10/00→				ETS55NS		
112 1.5		01/95→				ETS55NS		
112 1.5 16V		10/00→				ETS55NS		
112 1.5 16V		01/95→				ETS55NS		
112 1.6		01/05→				ETS55NS		
112 1.6		03/06→				ETS55NS		
KALINA Hatchback 1.4 16V	(1119)	11/08→				ETS55NS		
KALINA Hatchback 1.6	(1119)	10/04→				ETS55NS		
KALINA Hatchback 1.6 16V	(1119)	10/04→				ETS55NS		
KALINA Saloon 1.4 16V	(1118)	11/08→				ETS55NS		
KALINA Saloon 1.6	(1118)	10/04→				ETS55NS		
KALINA Saloon 1.6 16V	(1118)	10/04→				ETS55NS		

	Design		START	RUN	MAGIS	ETS	ETS alternative	ES
LADA								
KALINA Estate 1.4 16V	(1117)	11/08→				ETS55NS		
KALINA Estate 1.6	(1117)	10/04→				ETS55NS		
NADESCHDA 1.7	(2120)	12/97→				ETS55NS		
NADESCHDA 1.7 i	(2120)	12/97→				ETS55NS		
NADESCHDA 1.8	(2120)	12/97→				ETS55NS		
NADESCHDA 1.8 i	(2120)	12/97→				ETS55NS		
NIVA 1700 i	(2121)	06/96→				ETS55NS		
NIVA 1700 i 4x4	(2121)	10/00→				ETS55NS		
NIVA 1900 Diesel	(2121)	01/93→				ETS55NS		
NIVA 1900 Diesel	(2121)	01/99→				ETS55NS		
NIVA II 1.7	(2123)	09/02→				ETS55NS		
NOVA 1700 i Classic (VAZ2107)	(2105, 2108, 2109)	06/96→				ETS55NS		
NOVA Estate 1500	(2104)	08/94→				ETS55NS		
NOVA Estate 1700	(2104)	08/94→				ETS55NS		
SAMARA 1100	(2108, 2109)	02/96→				ETS55NS		
SAMARA 1300	(2108, 2109)	09/91→				ETS55NS		
SAMARA 1300	(2108, 2109)	02/96→				ETS55NS		
SAMARA 1500	(2108, 2109)	09/91→				ETS55NS		
SAMARA 1500	(2108, 2109)	02/95→				ETS55NS		
SAMARA 1.5	(2108, 2109)	01/00→				ETS55NS		
SAMARA FORMA 1100	(21099)	07/91→				ETS55NS		
SAMARA FORMA 1300	(21099)	07/91→				ETS55NS		
SAMARA FORMA 1300	(21099)	05/90→				ETS55NS		
SAMARA FORMA 1300	(21099)	02/96→				ETS55NS		
SAMARA FORMA 1500	(21099)	07/91→				ETS55NS		
SAMARA FORMA 1.5	(21099)	01/00→				ETS55NS		
SAMARA FORMA 1500	(21099)	11/94→				ETS55NS		
SAMARA FORMA 1500	(21099)	09/91→				ETS55NS		
LAMBORGHINI								
DIABLO 5.7		03/90→06/98		RUN72D	MAG74D	ETS74ND	ETS70D1N-ETS74DI	476420ES
DIABLO VT		01/90→08/98		RUN72D	MAG74D	ETS74ND	ETS70D1N-ETS74DI	476420ES
DIABLO SE		01/94→12/96		RUN72D	MAG74D	ETS74ND	ETS70D1N-ETS74DI	476420ES
DIABLO SV		01/98→		RUN72D	MAG74D	ETS74ND	ETS70D1N-ETS74DI	476420ES
DIABLO VT		08/98→		RUN72D	MAG74D	ETS74ND	ETS70D1N-ETS74DI	476420ES
DIABLO GT 2		01/98→		RUN72D	MAG74D	ETS74ND	ETS70D1N-ETS74DI	476420ES
DIABLO GT 5.9		10/99→		RUN72D	MAG74D	ETS74ND	ETS70D1N-ETS74DI	476420ES
DIABLO 6.0		04/00→08/03		RUN72D	MAG74D	ETS74ND	ETS70D1N-ETS74DI	476420ES
DIABLO Roadster 5.7		01/98→		RUN72D	MAG74D	ETS74ND	ETS70D1N-ETS74DI	476420ES
MURCIELAGO 6.2		11/01→		RUN72D	MAG74D	ETS74ND	ETS70D1N-ETS74DI	476420ES
MURCIELAGO LP 640		04/06→		RUN72D	MAG74D	ETS74ND	ETS70D1N-ETS74DI	476420ES
MURCIELAGO Roadster 6.2		08/04→		RUN72D	MAG74D	ETS74ND	ETS70D1N-ETS74DI	476420ES
LANCIA								
DEDRA 1.6 i.e. (835AN)	(835)	04/93→07/99		RUN50D	MAG50D-MAG45D	ETS50ND-ETS45ND	ETS50D3N-ETS50D4N	436210ES
DEDRA 1.6 LE (835EB) CAT	(835)	07/94→07/99		RUN50D	MAG50D-MAG45D	ETS50ND-ETS45ND	ETS50D3N-ETS50D4N	436210ES
DEDRA 1.6 16V (835EI)	(835)	01/96→07/99		RUN50D	MAG50D	ETS50ND	ETS50D3N-ETS50D4N	

	Design		START	RUN	MAGIS	ETS	ETS alternative	ES
LANCIA								
DEDRA 1.8 16V LE (835FG)	(835)	03/96→07/99		RUN50D	MAG50D	ETS50ND	ETS50D3N-ETS50D4N	
DEDRA 1.8 GT 16V (835EH)	(835)	03/96→07/99		RUN50D	MAG50D	ETS50ND	ETS50D3N-ETS50D4N	
DEDRA 1.8 i.e. (835AT)	(835)	08/93→07/99		RUN50D	MAG50D	ETS50ND	ETS50D3N-ETS50D4N	
DEDRA 1.8 i.e. (835FA)	(835)	07/94→07/99		RUN50D	MAG50D	ETS50ND	ETS50D3N-ETS50D4N	
DEDRA 2.0 16V (835ED)	(835)	07/94→07/99		RUN62D	MAG62D	ETS62ND	ETS60D3N	438320ES
DEDRA 2.0 i.e. Turbo (835AR)	(835)	04/91→07/99		RUN62D	MAG62D	ETS62ND	ETS60D3N	438320ES
DEDRA 2.0 i.e. Turbo Integrale (835AO)	(835)	05/90→07/94		RUN62D	MAG62D	ETS62ND	ETS60D3N	438320ES
DEDRA 2.0 HF Integrale (835AP)	(835)	11/90→07/94		RUN62D	MAG62D	ETS62ND	ETS60D3N	438320ES
DEDRA 2.0 Turbo (835AQ)	(835)	11/90→06/94		RUN62D	MAG62D	ETS62ND	ETS60D3N	438320ES
DEDRA SW 1.6 (835EB)	(835)	10/94→07/99		RUN50D	MAG50D	ETS50ND	ETS50D3N-ETS50D4N	
DEDRA SW 1.6 16V (835EI)	(835)	01/96→07/99		RUN50D				
DEDRA SW 1.8 16V LE (835FG)	(835)	03/96→07/99		RUN50D	MAG50D	ETS50ND	ETS50D3N-ETS50D4N	
DEDRA SW 1.8 GT 16V (835EH)	(835)	03/96→07/99		RUN50D	MAG50D	ETS50ND	ETS50D3N-ETS50D4N	
DEDRA SW 1.8 i.e. (835FA)	(835)	07/94→07/99		RUN50D	MAG50D	ETS50ND	ETS50D3N-ETS50D4N	
DEDRA SW 2.0 16V (835ED)	(835)	07/94→07/99		RUN62D	MAG62D	ETS62ND	ETS60D3N	438320ES
DEDRA SW 2.0 Integrale (835ED)	(835)	07/94→07/99		RUN62D	MAG62D	ETS62ND	ETS60D3N	438320ES
DEDRA SW 1.9 TDS (835EE, 835EF)	(835)	07/94→07/99		RUN72D	MAG74D	ETS74ND	ETS70D1N-ETS74DI	476420ES
DELTA I 2.0 16V HF Evo Integrale (831AB.027)	(831AB0)	06/93→01/94		RUN50D	MAG50D	ETS50ND	ETS50D3N-ETS50D4N	
DELTA II 1.4 i.e. (836AF, 836AH)	(836)	10/94→08/99		RUN50D	MAG50D-MAG45D	ETS50ND-ETS45ND	ETS50D3N-ETS50D4N	436210ES
DELTA II 1.6 i.e. (836AD)	(836)	06/93→08/99		RUN50D	MAG50D-MAG45D	ETS50ND-ETS45ND	ETS50D3N-ETS50D4N	436210ES
DELTA II 1.6 i.e. (836AP)	(836)	03/96→08/99		RUN50D	MAG50D-MAG45D	ETS50ND-ETS45ND	ETS50D3N-ETS50D4N	436210ES
DELTA II 1.6 i.e. 16V (836AO)	(836)	01/96→08/99		RUN50D	MAG50D-MAG45D	ETS50ND-ETS45ND	ETS50D3N-ETS50D4N	436210ES
DELTA II 1.8	(836)	02/96→09/99		RUN62D	MAG62D	ETS62ND	ETS60D3N	438320ES
DELTA II 1.8 i.e. 16V (836AQ)	(836)	03/96→08/99		RUN62D	MAG62D	ETS62ND	ETS60D3N	438320ES
DELTA II 1.8 i.e. 16V GT (836AR)	(836)	03/96→08/99		RUN62D	MAG62D	ETS62ND	ETS60D3N	438320ES
DELTA II 1.8 i.e. (836AG, 836AL)	(836)	07/94→08/99		RUN50D	MAG50D	ETS50ND	ETS50D3N-ETS50D4N	
DELTA II 1.8 i.e. (836AE)	(836)	06/93→08/99		RUN50D	MAG50D	ETS50ND	ETS50D3N-ETS50D4N	
DELTA II 2.0 16V (836AA, 836CA)	(836)	06/93→08/99		RUN62D	MAG62D	ETS62ND	ETS60D3N	438320ES
DELTA II 2.0 16V Turbo (836AB)	(836)	06/93→08/99		RUN62D	MAG62D	ETS62ND	ETS60D3N	438320ES
DELTA II 2.0 16V Turbo (836AS)	(836)	07/96→08/99		RUN62D	MAG62D	ETS62ND	ETS60D3N	438320ES
DELTA II 1.9 TD (836AM, 836AN)	(836)	10/94→08/99		RUN72D	MAG74D	ETS74ND	ETS70D1N-ETS74DI	476420ES
DELTA III 1.4		09/08→		RUN50D	MAG50D	ETS50ND	ETS50D3N-ETS50D4N	
DELTA III 1.4		09/08→		RUN50D	MAG50D	ETS50ND	ETS50D3N-ETS50D4N	
DELTA III 1.8		01/09→		RUN62D	MAG62D	ETS62ND	ETS60D3N	438320ES
DELTA III 1.6 D Multijet		09/08→		RUN62D	MAG62D	ETS62ND	ETS60D3N	438320ES
DELTA III 1.9 D Multijet		01/09→		RUN72D	MAG74D	ETS74ND	ETS70D1N-ETS74DI	476420ES
DELTA III 2.0 D Multijet		09/08→		RUN72D	MAG74D	ETS74ND	ETS70D1N-ETS74DI	476420ES
KAPPA 2.0 16V Turbo (838AB1AA)	(838A)	02/95→10/01		RUN62D	MAG62D	ETS62ND	ETS60D3N	438320ES
KAPPA 2.0 20V (838AA1AA)	(838A)	10/94→10/01		RUN62D	MAG62D	ETS62ND	ETS60D3N	438320ES
KAPPA 2.0 20V (838AG1AA, 838AG11A)	(838A)	07/96→10/01		RUN62D	MAG62D	ETS62ND	ETS60D3N	438320ES
KAPPA 2.0 20V Turbo (838AM1AA)	(838A)	06/98→10/01		RUN62D	MAG62D	ETS62ND	ETS60D3N	438320ES
KAPPA 2.4 20V (838AC1AA, 838AC11A)	(838A)	08/94→10/01		RUN62D	MAG62D	ETS62ND	ETS60D3N	438320ES
KAPPA 3.0 24V (838AD1AA, 838AD11A, 838XD1AA, 838ZD1AA)	(838A)	08/94→10/01		RUN62D	MAG62D	ETS62ND	ETS60D3N	438320ES
KAPPA 2.4 T.DS (838AE1AA, 838AH1AA)	(838A)	08/94→10/01		RUN72D	MAG74D	ETS74ND	ETS70D1N-ETS74DI	476420ES
KAPPA 2.4 JTD (838AL1AA)	(838A)	06/98→10/01		RUN72D	MAG74D	ETS74ND	ETS70D1N-ETS74DI	476420ES

	Design		START	RUN	MAGIS	ETS	ETS alternative	ES
LANCIA								
KAPPA SW 2.0 16V Turbo (838BB1AA)	(838B)	07/96→10/01		RUN62D	MAG62D	ETS62ND	ETS60D3N	438320ES
KAPPA SW 2.0 20V (838BG1AA)	(838B)	07/96→10/01		RUN62D	MAG62D	ETS62ND	ETS60D3N	438320ES
KAPPA SW 2.0 20V Turbo (838BM1AA)	(838B)	06/98→10/01		RUN62D	MAG62D	ETS62ND	ETS60D3N	438320ES
KAPPA SW 2.4 20V (838BC1AA, 838BC11A)	(838B)	07/96→10/01		RUN62D	MAG62D	ETS62ND	ETS60D3N	438320ES
KAPPA SW 3.0 24V (838BD11A)	(838B)	07/96→10/01		RUN62D	MAG62D	ETS62ND	ETS60D3N	438320ES
KAPPA SW 2.4 T.DS (838BH1AA)	(838B)	07/96→10/01		RUN72D	MAG74D	ETS74ND	ETS70D1N-ETS74DI	476420ES
KAPPA SW 2.4 JTD (838BL1AA)	(838B)	06/98→10/01		RUN72D	MAG74D	ETS74ND	ETS70D1N-ETS74DI	476420ES
KAPPA Coupe 2.0 16V Turbo (838CB)	(838)	11/96→03/01		RUN62D	MAG62D	ETS62ND	ETS60D3N	438320ES
KAPPA Coupe 2.0 20V	(838)	07/96→03/01		RUN62D	MAG62D	ETS62ND	ETS60D3N	438320ES
KAPPA Coupe 2.0 20V Turbo (838CM)	(838)	06/98→03/01		RUN62D	MAG62D	ETS62ND	ETS60D3N	438320ES
KAPPA Coupe 2.4 20V (838CC)	(838)	11/96→03/01		RUN62D	MAG62D	ETS62ND	ETS60D3N	438320ES
KAPPA Coupe 3.0 24V (838CD, 838CD11A)	(838)	11/96→03/01		RUN62D	MAG62D	ETS62ND	ETS60D3N	438320ES
LYBRA 1.6 16V (839AXA1A)	(839AX)	07/99→		RUN50D	MAG50D	ETS50ND	ETS50D3N-ETS50D4N	
LYBRA 1.6	(839AX)	10/00→10/05		RUN50D	MAG50D	ETS50ND	ETS50D3N-ETS50D4N	
LYBRA 1.8 16V (839AXB1A, 839AXG1A)	(839AX)	07/99→		RUN50D	MAG50D	ETS50ND	ETS50D3N-ETS50D4N	
LYBRA 2.0 20V (839AXH1A)	(839AX)	09/00→		RUN62D	MAG62D	ETS62ND	ETS60D3N	438320ES
LYBRA 2.0 20V (839AXC11, 839AXC1A)	(839AX)	07/99→09/00		RUN62D	MAG62D	ETS62ND	ETS60D3N	438320ES
LYBRA 1.9 JTD (839AXD1A)	(839AX)	07/99→09/00		RUN72D	MAG74D	ETS74ND	ETS70D1N-ETS74DI	476420ES
LYBRA 1.9 JTD (839AXI1A)	(839AX)	09/00→05/01		RUN72D	MAG74D	ETS74ND	ETS70D1N-ETS74DI	476420ES
LYBRA 1.9 JTD	(839AX)	05/01→		RUN72D	MAG74D	ETS74ND	ETS70D1N-ETS74DI	476420ES
LYBRA 2.4 JTD (839AXE1A)	(839AX)	07/99→09/00		RUN72D	MAG74D	ETS74ND	ETS70D1N-ETS74DI	476420ES
LYBRA 2.4 JTD (839AXL1A)	(839AX)	09/00→05/02		RUN72D	MAG74D	ETS74ND	ETS70D1N-ETS74DI	476420ES
LYBRA 2.4 JTD	(839AX)	05/02→		RUN72D	MAG74D	ETS74ND	ETS70D1N-ETS74DI	476420ES
LYBRA SW 1.6 16V (839BXA1A)	(839BX)	07/99→		RUN50D	MAG50D	ETS50ND	ETS50D3N-ETS50D4N	
LYBRA SW 1.6	(839BX)	10/00→10/05		RUN50D	MAG50D	ETS50ND	ETS50D3N-ETS50D4N	
LYBRA SW 1.8 16V (839BXB1A, 839BXG1A)	(839BX)	07/99→		RUN62D	MAG62D	ETS62ND	ETS60D3N	438320ES
LYBRA SW 2.0 20V (839BXH1A)	(839BX)	09/00→		RUN62D	MAG62D	ETS62ND	ETS60D3N	438320ES
LYBRA SW 2.0 20V (839BXC11, 839BXC1A)	(839BX)	07/99→09/00		RUN62D	MAG62D	ETS62ND	ETS60D3N	438320ES
LYBRA SW 1.9 JTD (839BXD1A)	(839BX)	07/99→09/00		RUN72D	MAG74D	ETS74ND	ETS70D1N-ETS74DI	476420ES
LYBRA SW 1.9 JTD (839BXI1A)	(839BX)	09/00→05/01		RUN72D	MAG74D	ETS74ND	ETS70D1N-ETS74DI	476420ES
LYBRA SW 1.9 JTD	(839BX)	05/01→		RUN72D	MAG74D	ETS74ND	ETS70D1N-ETS74DI	476420ES
LYBRA SW 2.4 JTD (839BXE1A)	(839BX)	10/99→09/00		RUN72D	MAG74D	ETS74ND	ETS70D1N-ETS74DI	476420ES
LYBRA SW 2.4 JTD (839BXL1A)	(839BX)	09/00→		RUN72D	MAG74D	ETS74ND	ETS70D1N-ETS74DI	476420ES
LYBRA SW 2.4 JTD	(839BX)	05/02→		RUN72D	MAG74D	ETS74ND	ETS70D1N-ETS74DI	476420ES
MUSA 1.4		09/05→		RUN44D			ETS44D2N	
MUSA 1.4	Stop/Start , A	09/09→	SST63D					
MUSA 1.4		10/04→		RUN44D			ETS44D2N	
MUSA 1.3 D Multijet		10/04→		RUN50D	MAG50D	ETS50ND	ETS50D3N-ETS50D4N	
MUSA 1.3 D Multijet		09/06→		RUN50D	MAG50D	ETS50ND	ETS50D3N-ETS50D4N	
MUSA 1.3 D Multijet		08/09→		RUN50D				
MUSA 1.6 D Multijet		07/08→		RUN62D	MAG62D	ETS62ND	ETS60D3N	438320ES
MUSA 1.9 D Multijet		10/04→		RUN62D	MAG62D	ETS62ND	ETS60D3N	438320ES
PHEDRA 2.0 (179AXA11)	(179)	09/02→	AGM70D	RUN62D	MAG62D	ETS62ND	ETS60D3N	438320ES

	Design		START	RUN	MAGIS	ETS	ETS alternative	ES
LANCIA								
PHEDRA 3.0 V6	(179)	09/02→		RUN62D	MAG62D	ETS62ND	ETS60D3N	438320ES
PHEDRA 2.0 JTD	(179)	07/03→		RUN72D	MAG74D	ETS74ND	ETS70D1N-ETS74DI	476420ES
PHEDRA 2.0 JTD (179AXB1A)	(179)	09/02→		RUN72D	MAG74D	ETS74ND	ETS70D1N-ETS74DI	476420ES
PHEDRA 2.0 JTD	(179)	06/06→		RUN72D	MAG74D	ETS74ND	ETS70D1N-ETS74DI	476420ES
PHEDRA 2.0 D Multijet	(179)	07/06→		RUN72D	MAG74D	ETS74ND	ETS70D1N-ETS74DI	476420ES
PHEDRA 2.2 JTD (179AXC1A)	(179)	09/02→	AGM70D	RUN72D	MAG74D	ETS74ND	ETS70D1N-ETS74DI	476420ES
PHEDRA 2.2 D Multijet	(179)	03/08→		RUN72D				
THEMA 2000 16V (834FA)	(834)	08/92→12/93		RUN62D	MAG62D	ETS62ND	ETS60D3N	438320ES
THEMA 2000 16V Turbo (834GC, 834FC)	(834)	10/92→07/94		RUN62D	MAG62D	ETS62ND	ETS60D3N	438320ES
THEMA 3000 V6 (834GD, 834FD)	(834)	08/92→07/94		RUN62D	MAG62D	ETS62ND	ETS60D3N	438320ES
THEMA 2500 Turbo DS (834FE, 834LE)	(834)	05/92→07/94		RUN72D	MAG74D	ETS74ND	ETS70D1N-ETS74DI	476420ES
THEMA SW 2000 16V (834FA)	(834)	05/92→07/94		RUN62D	MAG62D	ETS62ND	ETS60D3N	438320ES
THEMA SW 2000 Turbo 16V (834GC, 834FC)	(834)	11/92→07/94		RUN62D	MAG62D	ETS62ND	ETS60D3N	438320ES
THEMA SW 3000 V6 (834GD, 834FD)	(834)	09/92→07/94		RUN62D	MAG62D	ETS62ND	ETS60D3N	438320ES
THEMA SW 2500 Turbo DS (834FE, 834LE)	(834)	09/92→07/94		RUN72D	MAG74D	ETS74ND	ETS70D1N-ETS74DI	476420ES
THESIS 2.0 Turbo (841AXA1B03)	(841AX)	07/02→		RUN95D		ETS92ND-ETS95D1N		434440ES
THESIS 2.4 (841AXB1B00)	(841AX)	07/02→		RUN95D		ETS92ND-ETS95D1N		434440ES
THESIS 3.0 V6 (841AXC1101)	(841AX)	07/02→		RUN95D		ETS92ND-ETS95D1N		434440ES
THESIS 3.2 V6	(841AX)	05/03→		RUN95D		ETS92ND-ETS95D1N		434440ES
THESIS 2.4 JTD (841AXD1B02)	(841AX)	07/02→		RUN95D		ETS92ND-ETS95D1N		434440ES
THESIS 2.4 JTD	(841AX)	05/03→		RUN95D		ETS92ND-ETS95D1N		434440ES
THESIS 2.4 D Multijet	(841AX)	04/06→		RUN95D		ETS92ND-ETS95D1N		434440ES
Y10 1.1 i.e. Fire 4WD (156AG)	(156)	09/92→12/95		RUN50D	MAG50D-MAG45D	ETS50ND-ETS45ND	ETS50D3N-ETS50D4N	436210ES
Y10 1.1 Avenue (156AG)	(156)	01/95→12/95		RUN50D	MAG50D-MAG45D	ETS50ND-ETS45ND	ETS50D3N-ETS50D4N	436210ES
Y10 1.1 Avenue 4WD (156AG)	(156)	01/95→12/95		RUN50D	MAG50D-MAG45D	ETS50ND-ETS45ND	ETS50D3N-ETS50D4N	436210ES
Y 1.1 (840AE)	(840A)	11/95→09/03		RUN50D	MAG50D-MAG45D	ETS50ND-ETS45ND	ETS50D3N-ETS50D4N	436210ES
Y 1.2 (840AA, 840AF1A)	(840A)	03/96→09/03		RUN50D	MAG50D-MAG45D	ETS50ND-ETS45ND	ETS50D3N-ETS50D4N	436210ES
Y 1.2 16V (840AG1A)	(840A)	10/00→09/03		RUN50D	MAG50D	ETS50ND	ETS50D3N-ETS50D4N	
Y 1.2 16V (840AD)	(840A)	04/97→09/03		RUN50D	MAG50D	ETS50ND	ETS50D3N-ETS50D4N	
Y 1.4 12V (840AC)	(840A)	03/96→09/03		RUN50D	MAG50D	ETS50ND	ETS50D3N-ETS50D4N	
Y 1.4 12V (840AB)	(840A)	10/96→09/03		RUN50D	MAG50D	ETS50ND	ETS50D3N-ETS50D4N	
YPSILON 1.2		10/03→		RUN44D			ETS44D2N	
YPSILON 1.2		10/03→		RUN44D			ETS44D2N	
YPSILON 1.4		02/06→		RUN44D			ETS44D2N	
YPSILON 1.4 16V		10/03→		RUN44D			ETS44D2N	
YPSILON 1.3 JTD		10/03→		RUN50D	MAG50D	ETS50ND	ETS50D3N-ETS50D4N	
YPSILON 1.3 D Multijet		09/06→		RUN50D	MAG50D	ETS50ND	ETS50D3N-ETS50D4N	
YPSILON 1.3 D Multijet		09/06→		RUN50D	MAG50D	ETS50ND	ETS50D3N-ETS50D4N	
YPSILON 1.3 D Multijet		05/07→		RUN50D	MAG50D	ETS50ND	ETS50D3N-ETS50D4N	
ZETA 2.0 16V (220AL5)	(220)	05/98→07/00		RUN62D	MAG62D	ETS62ND	ETS60D3N	438320ES
ZETA 2.0 16V (220AQ5)	(220)	07/00→09/02		RUN62D	MAG62D	ETS62ND	ETS60D3N	438320ES
ZETA 2.0 Turbo (220AD5, 220CD5)	(220)	05/95→09/02		RUN62D	MAG62D	ETS62ND	ETS60D3N	438320ES
ZETA 2.0 JTD	(220)	04/00→09/02		RUN72D	MAG74D	ETS74ND	ETS70D1N-ETS74DI	476420ES
ZETA 2.0 JTD (220AN5)	(220)	09/99→09/02		RUN72D	MAG74D	ETS74ND	ETS70D1N-ETS74DI	476420ES
ZETA 2.1 TD (220AJ5)	(220)	05/96→09/99		RUN72D	MAG74D	ETS74ND	ETS70D1N-ETS74DI	476420ES

	Design		START	RUN	MAGIS	ETS	ETS alternative	ES
LANDROVER								
DEFENDER Station Wagon 3.9 V8	(LD)	11/98→		RUN62D	MAG62D	ETS62ND	ETS60D3N	438320ES
DISCOVERY I 2.0 16 V	(LJ, LG)	09/93→10/98		RUN62D	MAG62D	ETS62ND	ETS60D3N	438320ES
DISCOVERY I 2.5 TD		01-90→06-94						ES100720S
DISCOVERY I 3.9 V8	(LJ, LG)	09/93→10/98						ES70540S
DISCOVERY II 2.5 Td5, 2.5 TDI		10-95→						ES100720S
DISCOVERY III 4.4	(TAA)	07/04→		RUN95D		ETS92ND-ETS95D1N		434440ES
DISCOVERY III 5.0 V8	(TAA)	09/09→		RUN95D				
DISCOVERY III 5.0 V8	(TAA)	09/09→		RUN95D		ETS92ND-ETS95D1N		434440ES
DISCOVERY III 2.7 TD	(TAA)	07/04→		RUN95D		ETS92ND-ETS95D1N		434440ES
DISCOVERY III 3.0 TD	(TAA)	09/09→		RUN95D		ETS92ND-ETS95D1N		434440ES
FREELANDER 1.8 16V	(LN)	11/00→		RUN62D	MAG62D	ETS62ND	ETS60D3N	438320ES
FREELANDER 1.8 i 16V	(LN)	02/98→11/00		RUN62D	MAG62D	ETS62ND	ETS60D3N	438320ES
FREELANDER 2.5 V6	(LN)	11/00→		RUN62D	MAG62D	ETS62ND	ETS60D3N	438320ES
FREELANDER 2.0 DI	(LN)	02/98→11/00		RUN72D	MAG74D	ETS74ND	ETS70D1N-ETS74DI	476420ES
FREELANDER 2.0 Td4	(LN)	11/01→		RUN72D	MAG74D	ETS74ND	ETS70D1N-ETS74DI	476420ES
FREELANDER 2.0 Td4	(LN)	11/00→		RUN72D	MAG74D	ETS74ND	ETS70D1N-ETS74DI	476420ES
FREELANDER Soft Top 1.8 i 16V		02/98→		RUN62D	MAG62D	ETS62ND	ETS60D3N	438320ES
FREELANDER Soft Top 2.0 DI		02/98→		RUN72D	MAG74D	ETS74ND	ETS70D1N-ETS74DI	476420ES
FREELANDER 2 3.2 i6 HSE 4x4	(FA_)	10/06→		RUN72D	MAG74D	ETS74ND	ETS70D1N-ETS74DI	476420ES
FREELANDER 2 3.2	(FA_)	10/06→		RUN72D	MAG74D	ETS74ND	ETS70D1N-ETS74DI	476420ES
FREELANDER 2 2.2 TD4	Stop/Start , A	01/07→	AGM70D					
FREELANDER 2 2.2 TD4 4x4	(FA_)	10/06→		RUN72D	MAG74D	ETS74ND	ETS70D1N-ETS74DI	476420ES
FREELANDER 2 2.2 TD4	(FA_)	10/06→		RUN72D	MAG74D	ETS74ND	ETS70D1N-ETS74DI	476420ES
RANGE ROVER II 3.9-4.0	(LP)	06/98→03/02		RUN95D				
RANGE ROVER II 4.6		07/94→03/02		RUN95D				
RANGE ROVER III 4.2	(LM)	05/05→		RUN95D		ETS92ND-ETS95D1N		434440ES
RANGE ROVER III 4.4	(LM)	03/02→		RUN95D		ETS92ND-ETS95D1N		434440ES
RANGE ROVER III 4.4	(LM)	05/05→		RUN95D		ETS92ND-ETS95D1N		434440ES
RANGE ROVER III 5.0 V8	(LM)	09/09→		RUN95D				
RANGE ROVER III 3.0 TD 6	(LM)	03/02→		RUN95D		ETS92ND-ETS95D1N		434440ES
RANGE ROVER III 3.6 TD 8	(LM)	04/06→		RUN95D		ETS92ND-ETS95D1N		434440ES
RANGE ROVER SPORT 4.2	(LS)	02/05→		RUN95D		ETS92ND-ETS95D1N		434440ES
RANGE ROVER SPORT 4.4	(LS)	02/05→		RUN95D		ETS92ND-ETS95D1N		434440ES
RANGE ROVER SPORT 5.0 V8	(LS)	09/09→		RUN95D				
RANGE ROVER SPORT 2.7 TDVM	(LS)	02/05→		RUN95D		ETS92ND-ETS95D1N		434440ES
RANGE ROVER SPORT 3.0 TD	(LS)	09/09→		RUN95D				
RANGE ROVER SPORT 3.6 TD 8	(LS)	04/06→		RUN95D		ETS92ND-ETS95D1N		434440ES
LDV								
CONVOY Bus 2.5 D		10/97→			MAG62DB	ETS60NDB-ETS50NDB		ES60NDB
CONVOY Bus 2.5 D		10/97→			MAG62DB	ETS60NDB-ETS50NDB		ES60NDB
CONVOY Bus 2.5 D		04/96→02/02			MAG62DB	ETS60NDB-ETS50NDB		ES60NDB
CONVOY Bus 2.5 D		04/96→02/02			MAG62DB	ETS60NDB-ETS50NDB		ES60NDB
CONVOY Box 2.4 D		03/02→			MAG62DB	ETS60NDB-ETS50NDB		ES60NDB
CONVOY Box 2.4 D		03/02→			MAG62DB	ETS60NDB-ETS50NDB		ES60NDB
CONVOY Box 2.5 D		04/96→09/97			MAG62DB	ETS60NDB-ETS50NDB		ES60NDB
CONVOY Box 2.5 DI		10/98→			MAG62DB	ETS60NDB-ETS50NDB		ES60NDB

	Design		START	RUN	MAGIS	ETS	ETS alternative	ES
LDV								
CONVOY Box 2.5 D		04/96→09/97			MAG62DB	ETS60NDB-ETS50NDB		ES60NDB
CONVOY Box 2.5 TDI		10/98→			MAG62DB	ETS60NDB-ETS50NDB		ES60NDB
CONVOY Flatbed / Chassis 2.5 D		04/96→09/97			MAG62DB	ETS60NDB-ETS50NDB		ES60NDB
CONVOY Flatbed / Chassis 2.5 D		04/96→09/97			MAG62DB	ETS60NDB-ETS50NDB		ES60NDB
CONVOY Flatbed / Chassis 2.5 DI		10/98→			MAG62DB	ETS60NDB-ETS50NDB		ES60NDB
CONVOY Flatbed / Chassis 2.5 TDI		10/98→			MAG62DB	ETS60NDB-ETS50NDB		ES60NDB
MAXUS Bus 2.5 CDi		02/05→			MAG72DB	ETS71NDB		
MAXUS Bus 2.5 CDi		02/05→			MAG72DB	ETS71NDB		
MAXUS Bus 2.5 CRD		02/06→			MAG72DB	ETS71NDB		
MAXUS Box 2.5 CDi		02/05→			MAG72DB	ETS71NDB		
MAXUS Box 2.5 DTiC		10/05→07/07			MAG72DB	ETS71NDB		
MAXUS Box 2.5 CRD		02/06→			MAG72DB	ETS71NDB		
MAXUS Flatbed / Chassis 2.5 CRD		02/05→			MAG72DB	ETS71NDB		
MAXUS Flatbed / Chassis 2.5 CRD		10/05→07/07			MAG72DB	ETS71NDB		
MAXUS Flatbed / Chassis 2.5 CRD		02/06→			MAG72DB	ETS71NDB		
400 Bus 2.5 TD		11/95→			MAG62DB	ETS60NDB-ETS50NDB		ES60NDB
400 Box 2.5 TD		11/95→			MAG62DB	ETS60NDB-ETS50NDB		ES60NDB
400 Flatbed / Chassis 2.5 TD		11/95→			MAG62DB	ETS60NDB-ETS50NDB		ES60NDB
LEXUS								
LS 400 I V8		01-91→10-00			MAG100D	ETS100ND-ETS100KD	ETS100D2N-ETSD1N	
LEXUS SC 430		08/01→		RUN72D	MAG74D	ETS74ND	ETS70D1N-ETS74DI	476420ES
LIGIER								
AMBRA 0.5		12/96→		RUN44D			ETS44D2N	
BE UP 0.5		08/02→		RUN44D			ETS44D2N	
NOVA 400		08/02→		RUN44D			ETS44D2N	
NOVA 500		08/02→		RUN44D			ETS44D2N	
NOVA 650		08/02→		RUN44D			ETS44D2N	
LOTUS								
ELAN 1.6 i 16V Turbo		09/91→11/95			MAG62DB	ETS60NDB-ETS50NDB		ES60NDB
ELISE 1.8 16V		08/95→11/00			MAG62DB	ETS60NDB	ETS60D4N	ES60NDB
ELISE 111 S		03/99→11/00			MAG62DB	ETS60NDB	ETS60D4N	ES60NDB
ELISE 1.8		11/00→			MAG62DB	ETS60NDB	ETS60D4N	ES60NDB
ELISE 1.8		10/03→			MAG62DB	ETS60NDB	ETS60D4N	ES60NDB
ELISE 1.8		05/02→			MAG62DB	ETS60NDB	ETS60D4N	ES60NDB
ELISE 1.8		11/02→			MAG62DB	ETS60NDB	ETS60D4N	ES60NDB
ELISE 1.8		01/04→			MAG62DB	ETS60NDB	ETS60D4N	ES60NDB
ELISE 340 R 1.8		03/00→			MAG62DB	ETS60NDB	ETS60D4N	ES60NDB
ESPRIT S4 2.0 GT3	(082)	09/96→06/00			MAG72DB	ETS71NDB		
ESPRIT S4 2.2	(082)	09/90→01/92			MAG72DB	ETS71NDB		
ESPRIT S4 2.2	(082)	09/90→10/91			MAG72DB	ETS71NDB		
ESPRIT S4 2.2	(082)	10/94→08/96			MAG72DB	ETS71NDB		
ESPRIT S4 2.2	(082)	05/93→07/96			MAG72DB	ETS71NDB		
ESPRIT S4 2.2	(082)	11/94→07/96			MAG72DB	ETS71NDB		
ESPRIT S4 3.5 V8 32V Turbo	(082)	02/96→			MAG72DB	ETS71NDB		
EUROPA S 2.0 Turbo		07/06→			MAG62DB	ETS60NDB-ETS50NDB		ES60NDB

	Design		START	RUN	MAGIS	ETS	ETS alternative	ES
LOTUS								
EXIGE 1.8 16V	(SCC_)	09/01→			MAG62DB	ETS60NDB-ETS50NDB		ES60NDB
EXIGE 1.8 16V	(SCC_)	09/01→			MAG62DB	ETS60NDB-ETS50NDB		ES60NDB
EXIGE 1.8 16V	(SCC_)	04/06→			MAG62DB	ETS60NDB-ETS50NDB		ES60NDB
EXIGE 1.8 265 E	(SCC_)	08/06→			MAG62DB	ETS60NDB-ETS50NDB		ES60NDB
MARUTI SUZUKI								
800 0.8		01/91→						ES45300SJ
MASERATI								
3200 GT 3.2 Biturbo V8 32V		10/98→03/02		RUN72D	MAG74D	ETS74ND	ETS70D1N-ETS74DI	476420ES
3200 GT 3.2 Biturbo V8 32V		10/98→03/02		RUN72D	MAG74D	ETS74ND	ETS70D1N-ETS74DI	476420ES
GHIBLI II 2.0 24V Biturbo		05/92→		RUN72D	MAG74D	ETS74ND	ETS70D1N-ETS74DI	476420ES
GHIBLI II 2.0		05/92→09/94		RUN72D	MAG74D	ETS74ND	ETS70D1N-ETS74DI	476420ES
GHIBLI II 2.8 24V Biturbo		06/92→		RUN72D	MAG74D	ETS74ND	ETS70D1N-ETS74DI	476420ES
GRANSPORT Coupe 4.3		06/03→		RUN72D	MAG74D	ETS74ND	ETS70D1N-ETS74DI	476420ES
GRANSPORT Convertible 4.3		10/04→		RUN72D	MAG74D	ETS74ND	ETS70D1N-ETS74DI	476420ES
MC 12 6.0		08/04→		RUN72D	MAG74D	ETS74ND	ETS70D1N-ETS74DI	476420ES
QUATTROPORTE II 2.0 Biturbo		03/94→		RUN72D	MAG74D	ETS74ND	ETS70D1N-ETS74DI	476420ES
QUATTROPORTE II 2.8		10/98→10/99		RUN72D	MAG74D	ETS74ND	ETS70D1N-ETS74DI	476420ES
QUATTROPORTE II 2.8 Biturbo		03/94→		RUN72D	MAG74D	ETS74ND	ETS70D1N-ETS74DI	476420ES
QUATTROPORTE II 3.2 V8 32V		12/95→		RUN95D		ETS92ND-ETS95D1N		434440ES
QUATTROPORTE III 4.2		03/04→		RUN95D		ETS92ND-ETS95D1N		434440ES
SPYDER Coupe 4.2		03/02→		RUN72D	MAG74D	ETS74ND	ETS70D1N-ETS74DI	476420ES
SPYDER Coupe 4.2 Grand Sport		06/05→		RUN72D	MAG74D	ETS74ND	ETS70D1N-ETS74DI	476420ES
SPYDER GT Convertible 4.2		10/01→						ES70540S
MAZDA								
121 II 1.1	(DB)	11/90→10/93						ES45300D
121 II 1.3 16V	(DB)	11/90→03/96						ES45300D
121 II 1.3 i 16V	(DB)	11/90→03/96						ES45300D
121 III 1.8 D	(JASM, JBSM)	03/96→		RUN62D	MAG62D	ETS62ND	ETS60D3N	438320ES
626 2.0 D		01-92→04-97			MAG100D	ETS100ND-ETS100KD	ETS100D2N-ETSD1N	
626 2.5 I V6		01-92→10-02			MAG100D	ETS100ND-ETS100KD	ETS100D2N-ETSD1N	
2 1.25	(DY)	04/03→			MAG44DB	ETS44NDB		ES45NDB
2 1.4	(DY)	04/03→			MAG44DB	ETS44NDB		ES45NDB
2 1.6	(DY)	04/03→			MAG44DB	ETS44NDB		ES45NDB
2 1.4 CD	(DY)	04/03→			MAG44DB	ETS44NDB		ES45NDB
2 1.3	(DE)	10/07→		RUN50D	MAG50D	ETS50ND	ETS50D3N-ETS50D4N	
2 1.3	(DE)	10/07→		RUN50D	MAG50D	ETS50ND	ETS50D3N-ETS50D4N	
2 1.5	(DE)	10/07→		RUN62D	MAG62D	ETS62ND	ETS60D3N	438320ES
2 1.4 MZR-CD	(DE)	01/08→		RUN62D	MAG62D	ETS62ND	ETS60D3N	438320ES
2 1.6 MZ-CD	(DE)	10/08→		RUN62D	MAG62D	ETS62ND	ETS60D3N	438320ES
6 ATENZA 2.0 CDVI		03-02→			MAG100D	ETS100ND-ETS100KD	ETS100D2N-ETSD1N	
B - 2500 D		02-96→06-99						ES100720S
CX-7 2.3 MZR DISI Turbo	(ER)	10/07→		RUN72D	MAG74D	ETS74ND	ETS70D1N-ETS74DI	476420ES
CX-7 2.3 MZR DISI Turbo	(ER)	09/09→		RUN72D	MAG74D	ETS74ND	ETS70D1N-ETS74DI	476420ES
DEMIO 1.3 16V	(DW)	08/98→						ES45300D

	Design		START	RUN	MAGIS	ETS	ETS alternative	ES
MAZDA								
DEMIO 1.3 i 16V	(DW)	08/98→04/00						ES45300D
DEMIO 1.5 16V	(DW)	04/00→						ES45300D
MPV 2.0 CDVI		08-99→			MAG100D	ETS100ND-ETS100KD	ETS100D2N-ETSD1N	
MPV 2.5 TD		01-96→09-99			MAG100D	ETS100ND-ETS100KD	ETS100D2N-ETSD1N	
MX-5 I 1.6	(NA)	01/95→04/98						ES45300D
MX-5 I 1.6	(NA)	05/90→01/94						ES45300D
MX-5 I 1.8	(NA)	02/94→04/98						ES45300D
MX-5 II 1.6 16V	(NB)	05/98→10/05						ES45300D
MX-5 II 1.8	(NB)	01/98→07/02						ES45300D
MX-5 II 1.9 16V	(NB)	11/00→10/05		RUN50D				
MX-5 II 1.9 16V	(NB)	05/98→10/05						ES45300D
MX-5 II 1.8	(NB)	08/02→10/05						ES45300D
MX-5 II 1.9 16V	(NB)	11/00→10/05						ES45300D
MX-5 III 1.8	(NC)	03/05→						ES45300D
MX-5 III 2.0	(NC)	03/05→						ES45300D
TRIBUTE 2.0	(EP)	03/00→		RUN62D	MAG62D	ETS62ND	ETS60D3N	438320ES
TRIBUTE 2.0 4WD	(EP)	03/00→		RUN72D	MAG74D	ETS74ND	ETS70D1N-ETS74DI	476420ES
TRIBUTE 2.3 AWD	(EP)	04/04→		RUN72D	MAG74D	ETS74ND	ETS70D1N-ETS74DI	476420ES
TRIBUTE 3.0 V6 24V 4WD	(EP)	03/00→		RUN72D	MAG74D	ETS74ND	ETS70D1N-ETS74DI	476420ES
TRIBUTE 3.0 V6 AWD	(EP)	04/04→		RUN72D	MAG74D	ETS74ND	ETS70D1N-ETS74DI	476420ES
MERCEDES								
MERCEDES 408 D					MAG100D	ETS100ND-ETS100KD	ETS100D2N-ETSD1N	
MERCEDES 609					MAG100D	ETS100ND-ETS100KD	ETS100D2N-ETSD1N	
MERCEDES 610					MAG100D	ETS100ND-ETS100KD	ETS100D2N-ETSD1N	
MERCEDES 709 LL					MAG100D	ETS100ND-ETS100KD	ETS100D2N-ETSD1N	
MERCEDES 808, 810					MAG100D	ETS100ND-ETS100KD	ETS100D2N-ETSD1N	
A-CLASS A 140 (168.031, 168.131)	(W168)	07/97→08/04		RUN50D				
A-CLASS A 140 (168.031, 168.131)	(W168)	01/01→08/04		RUN50D				
A-CLASS A 160 (168.033, 168.133)	(W168)	07/97→08/04		RUN62D	MAG62D	ETS62ND	ETS60D3N	438320ES
A-CLASS A 160	Stop/Start , H	04/09→	AGM70D					
A-CLASS A 190 (168.032, 168.132)	(W168)	03/99→08/04		RUN72D	MAG74D	ETS74ND	ETS70D1N-ETS74DI	476420ES
A-CLASS 1.9 A 190 Twin Engine	(W168)	04/99→02/01		RUN72D	MAG74D	ETS74ND	ETS70D1N-ETS74DI	476420ES
A-CLASS A 210 (168.035, 168.135)	(W168)	03/02→08/04		RUN72D	MAG74D	ETS74ND	ETS70D1N-ETS74DI	476420ES
A-CLASS A 160 CDI (168.007)	(W168)	07/98→02/01	AGM70D	RUN72D	MAG74D	ETS74ND	ETS70D1N-ETS74DI	476420ES
A-CLASS A 160 CDI (168.006)	(W168)	02/01→08/04		RUN72D	MAG74D	ETS74ND	ETS70D1N-ETS74DI	476420ES
A-CLASS A 160 CDI	Stop/Start , H	04/09→	AGM70D					
A-CLASS A 170 CDI (168.008)	(W168)	07/98→02/01		RUN72D	MAG74D	ETS74ND	ETS70D1N-ETS74DI	476420ES
A-CLASS A 170 CDI (168.009, 168.109)	(W168)	02/01→08/04		RUN72D	MAG74D	ETS74ND	ETS70D1N-ETS74DI	476420ES
A-CLASS A 150 (169.031, 169.331)	(W169)	09/04→		RUN62D	MAG62D	ETS62ND	ETS60D3N	438320ES
A-CLASS A 170 (169.032, 169.332)	(W169)	09/04→		RUN62D	MAG62D	ETS62ND	ETS60D3N	438320ES
A-CLASS A 200 (169.033, 169.333)	(W169)	09/04→		RUN62D	MAG62D	ETS62ND	ETS60D3N	438320ES
A-CLASS A 200 TURBO (169.034, 169.334)	(W169)	09/05→		RUN62D	MAG62D	ETS62ND	ETS60D3N	438320ES
A-CLASS A 160 CDI (169.006, 169.306)	(W169)	09/04→		RUN72D	MAG74D	ETS74ND	ETS70D1N-ETS74DI	476420ES
A-CLASS A 180 CDI (169.007, 169.307)	(W169)	09/04→	AGM70D	RUN72D	MAG74D	ETS74ND	ETS70D1N-ETS74DI	476420ES
A-CLASS A 180	Stop/Start , H	04/09→	AGM70D					

	Design		START	RUN	MAGIS	ETS	ETS alternative	ES
MERCEDES								
A-CLASS A 200 CDI (169.008, 169.308)	(W169)	09/04→		RUN72D	MAG74D	ETS74ND	ETS70D1N-ETS74DI	476420ES
B-CLASS B 150 (245.231)	(W245)	03/05→	AGM70D	RUN72D	MAG74D	ETS74ND	ETS70D1N-ETS74DI	476420ES
B-CLASS B 160		04/09→						
B-CLASS B 170 (245.232)	(W245)	03/05→		RUN72D	MAG74D	ETS74ND	ETS70D1N-ETS74DI	476420ES
B-CLASS B 200 (245.233)	(W245)	03/05→		RUN72D	MAG74D	ETS74ND	ETS70D1N-ETS74DI	476420ES
B-CLASS B 200 TURBO (245.234)	(W245)	03/05→	AGM70D	RUN72D	MAG74D	ETS74ND	ETS70D1N-ETS74DI	476420ES
B-CLASS B 180 CDI (245.207)	(W245)	03/05→		RUN72D	MAG74D	ETS74ND	ETS70D1N-ETS74DI	476420ES
B-CLASS B 200 CDI (245.208) Turbo	(W245)	03/05→		RUN72D	MAG74D	ETS74ND	ETS70D1N-ETS74DI	476420ES
B-CLASS B 170 NGT (245.233)	(W245)	04/08→		RUN72D	MAG74D	ETS74ND	ETS70D1N-ETS74DI	476420ES
B-CLASS B 180	Stop/Start , H	04/08→	AGM70D	RUN72D	MAG74D	ETS74ND	ETS70D1N-ETS74DI	476420ES
VANEO 1.6 (414.700)	(414)	02/02→	AGM70D	RUN72D	MAG74D	ETS74ND	ETS70D1N-ETS74DI	476420ES
VANEO 1.6 (414.700)	(414)	02/02→		RUN72D	MAG74D	ETS74ND	ETS70D1N-ETS74DI	476420ES
VANEO 1.9 (414.700)	(414)	02/02→	AGM70D	RUN72D	MAG74D	ETS74ND	ETS70D1N-ETS74DI	476420ES
VANEO 1.7 CDI (414.700)	(414)	02/02→	AGM70D	RUN72D	MAG74D	ETS74ND	ETS70D1N-ETS74DI	476420ES
VANEO 1.7 CDI (414.700)	(414)	02/02→		RUN72D	MAG74D	ETS74ND	ETS70D1N-ETS74DI	476420ES
190 E 1.8 (201.018)	(W201)	04/90→08/93		RUN62D	MAG62D	ETS62ND	ETS60D3N	438320ES
190 E Evolution II 2.5	(W201)	05/90→08/93		RUN62D	MAG62D	ETS62ND	ETS60D3N	438320ES
C-CLASS C 180 (202.018)	(W202)	11/94→05/00		RUN62D	MAG62D	ETS62ND	ETS60D3N	438320ES
C-CLASS C 180 (202.018)	(W202)	03/93→05/00		RUN62D	MAG62D	ETS62ND	ETS60D3N	438320ES
C-CLASS C 200 (202.020)	(W202)	01/94→05/00		RUN62D	MAG62D	ETS62ND	ETS60D3N	438320ES
C-CLASS C 200 Kompressor (202.025)	(W202)	10/95→05/00		RUN72D	MAG74D	ETS74ND	ETS70D1N-ETS74DI	476420ES
C-CLASS C 200 Kompressor (202.025)	(W202)	11/96→05/00		RUN72D	MAG74D	ETS74ND	ETS70D1N-ETS74DI	476420ES
C-CLASS C 220 (202.022)	(W202)	03/93→05/00		RUN72D	MAG74D	ETS74ND	ETS70D1N-ETS74DI	476420ES
C-CLASS C 230 (202.023)	(W202)	06/96→06/97		RUN72D	MAG74D	ETS74ND	ETS70D1N-ETS74DI	476420ES
C-CLASS C 230 Kompressor (202.024)	(W202)	10/95→05/00		RUN72D	MAG74D	ETS74ND	ETS70D1N-ETS74DI	476420ES
C-CLASS C 240 (202.026)	(W202)	06/97→05/00		RUN72D	MAG74D	ETS74ND	ETS70D1N-ETS74DI	476420ES
C-CLASS C 280 (202.028)	(W202)	05/93→05/00		RUN72D	MAG74D	ETS74ND	ETS70D1N-ETS74DI	476420ES
C-CLASS C 280 (202.029)	(W202)	06/97→05/00		RUN72D	MAG74D	ETS74ND	ETS70D1N-ETS74DI	476420ES
C-CLASS C 36 AMG (202.028)	(W202)	05/94→05/00		RUN72D	MAG74D	ETS74ND	ETS70D1N-ETS74DI	476420ES
C-CLASS C 43 AMG (202.033)	(W202)	08/97→05/00		RUN72D	MAG74D	ETS74ND	ETS70D1N-ETS74DI	476420ES
C-CLASS C 200 D (202.120)	(W202)	03/93→05/00		RUN72D	MAG74D	ETS74ND	ETS70D1N-ETS74DI	476420ES
C-CLASS C 200 D (202.122)	(W202)	10/96→05/00		RUN72D	MAG74D	ETS74ND	ETS70D1N-ETS74DI	476420ES
C-CLASS C 200 CDI (202.134)	(W202)	03/98→05/00		RUN72D	MAG74D	ETS74ND	ETS70D1N-ETS74DI	476420ES
C-CLASS C 220 CDI (202.133)	(W202)	09/97→05/00		RUN72D	MAG74D	ETS74ND	ETS70D1N-ETS74DI	476420ES
C-CLASS C 220 D	(W202)	07/96→05/00		RUN72D	MAG74D	ETS74ND	ETS70D1N-ETS74DI	476420ES
C-CLASS C 220 D (202.121)	(W202)	08/93→05/00		RUN72D	MAG74D	ETS74ND	ETS70D1N-ETS74DI	476420ES
C-CLASS C 250 D (202.125)	(W202)	05/93→05/00		RUN72D	MAG74D	ETS74ND	ETS70D1N-ETS74DI	476420ES
C-CLASS C 250 Turbo-D (202.128)	(W202)	10/95→05/00		RUN72D	MAG74D	ETS74ND	ETS70D1N-ETS74DI	476420ES
C-CLASS Estate C 180 T (202.078)	(S202)	06/96→09/00		RUN72D	MAG74D	ETS74ND	ETS70D1N-ETS74DI	476420ES
C-CLASS Estate C 180 T (202.081)	(S202)	09/00→03/01		RUN72D	MAG74D	ETS74ND	ETS70D1N-ETS74DI	476420ES
C-CLASS Estate C 200 T (202.080)	(S202)	06/96→03/01		RUN72D	MAG74D	ETS74ND	ETS70D1N-ETS74DI	476420ES
C-CLASS Estate C 200 T Kompressor (202.082)	(S202)	11/96→03/01		RUN72D	MAG74D	ETS74ND	ETS70D1N-ETS74DI	476420ES
C-CLASS Estate C 200 T Kompressor (202.087)	(S202)	09/00→03/01		RUN72D	MAG74D	ETS74ND	ETS70D1N-ETS74DI	476420ES
C-CLASS Estate C 230 T (202.083)	(S202)	06/96→06/98		RUN72D	MAG74D	ETS74ND	ETS70D1N-ETS74DI	476420ES

	Design		START	RUN	MAGIS	ETS	ETS alternative	ES
MERCEDES								
C-CLASS Estate C 230 T Kompressor (202.085)	(S202)	06/97→09/00		RUN72D	MAG74D	ETS74ND	ETS70D1N-ETS74DI	476420ES
C-CLASS Estate C 240 T (202.086)	(S202)	06/97→09/00		RUN72D	MAG74D	ETS74ND	ETS70D1N-ETS74DI	476420ES
C-CLASS Estate C 240 T (202.088)	(S202)	09/00→03/01		RUN72D	MAG74D	ETS74ND	ETS70D1N-ETS74DI	476420ES
C-CLASS Estate C 280 T (202.089)	(S202)	06/97→03/01		RUN95D		ETS92ND-ETS95D1N		434440ES
C-CLASS Estate C 43 AMG (202.093)	(S202)	08/97→03/01		RUN95D		ETS92ND-ETS95D1N		434440ES
C-CLASS Estate C 200 T D (202.180)	(S202)	10/96→03/01		RUN95D		ETS92ND-ETS95D1N		434440ES
C-CLASS Estate C 200 T CDI (202.194)	(S202)	03/98→03/01		RUN95D		ETS92ND-ETS95D1N		434440ES
C-CLASS Estate C 220 T CDI (202.193)	(S202)	09/97→03/01		RUN95D		ETS92ND-ETS95D1N		434440ES
C-CLASS Estate C 220 T D	(S202)	06/96→03/01		RUN95D		ETS92ND-ETS95D1N		434440ES
C-CLASS Estate C 220 T D (202.182)	(S202)	06/96→09/98		RUN95D		ETS92ND-ETS95D1N		434440ES
C-CLASS Estate C 250 T Turbo-D (202.188)	(S202)	06/96→03/01		RUN95D		ETS92ND-ETS95D1N		434440ES
C-CLASS C 180 Kompressor (203.046)	(W203)	05/02→		RUN72D	MAG74D	ETS74ND	ETS70D1N-ETS74DI	476420ES
C-CLASS C 180 (203.035)	(W203)	10/00→05/02		RUN62D	MAG62D	ETS62ND	ETS60D3N	438320ES
C-CLASS C 200 Kompressor (203.042)	(W203)	05/02→		RUN72D	MAG74D	ETS74ND	ETS70D1N-ETS74DI	476420ES
C-CLASS C 200 Kompressor (203.045)	(W203)	05/00→05/02		RUN72D	MAG74D	ETS74ND	ETS70D1N-ETS74DI	476420ES
C-CLASS C 200 CGI Kompressor (203.043)	(W203)	07/03→		RUN72D	MAG74D	ETS74ND	ETS70D1N-ETS74DI	476420ES
C-CLASS C 230 Kompressor (203.040)	(W203)	02/04→		RUN72D	MAG74D	ETS74ND	ETS70D1N-ETS74DI	476420ES
C-CLASS C 230 (203.052)	(W203)	01/05→		RUN72D	MAG74D	ETS74ND	ETS70D1N-ETS74DI	476420ES
C-CLASS C 240 (203.061)	(W203)	05/00→		RUN72D	MAG74D	ETS74ND	ETS70D1N-ETS74DI	476420ES
C-CLASS C 240 4-matic (203.081)	(W203)	07/02→		RUN72D	MAG74D	ETS74ND	ETS70D1N-ETS74DI	476420ES
C-CLASS C 280 (203.054)	(W203)	01/05→		RUN72D	MAG74D	ETS74ND	ETS70D1N-ETS74DI	476420ES
C-CLASS C 280 4-matic (203.092)	(W203)	01/05→		RUN72D	MAG74D	ETS74ND	ETS70D1N-ETS74DI	476420ES
C-CLASS C 320 (203.064)	(W203)	05/00→		RUN72D	MAG74D	ETS74ND	ETS70D1N-ETS74DI	476420ES
C-CLASS C 320 4-matic (203.084)	(W203)	07/02→		RUN72D	MAG74D	ETS74ND	ETS70D1N-ETS74DI	476420ES
C-CLASS 3.5	(W203)	01/05→02/07		RUN72D	MAG74D	ETS74ND	ETS70D1N-ETS74DI	476420ES
C-CLASS C 350 (203.056)	(W203)	01/05→		RUN72D	MAG74D	ETS74ND	ETS70D1N-ETS74DI	476420ES
C-CLASS C 350 4-matic (203.087)	(W203)	01/05→		RUN72D	MAG74D	ETS74ND	ETS70D1N-ETS74DI	476420ES
C-CLASS C 32 AMG Kompressor (203.065)	(W203)	02/01→			MAG82D	ETS80ND		
C-CLASS C 55 AMG (203.076)	(W203)	02/04→			MAG82D	ETS80ND		
C-CLASS C 200 CDI	(W203)	02/01→		RUN72D	MAG74D	ETS74ND	ETS70D1N-ETS74DI	476420ES
C-CLASS C 200 CDI (203.004)	(W203)	09/00→		RUN72D	MAG74D	ETS74ND	ETS70D1N-ETS74DI	476420ES
C-CLASS C 200 CDI (203.007)	(W203)	04/03→		RUN72D	MAG74D	ETS74ND	ETS70D1N-ETS74DI	476420ES
C-CLASS C 220 CDI (203.006)	(W203)	05/00→		RUN72D	MAG74D	ETS74ND	ETS70D1N-ETS74DI	476420ES
C-CLASS C 220 CDI (203.008)	(W203)	02/04→		RUN72D	MAG74D	ETS74ND	ETS70D1N-ETS74DI	476420ES
C-CLASS C 270 CDI (203.016)	(W203)	12/00→		RUN72D	MAG74D	ETS74ND	ETS70D1N-ETS74DI	476420ES
C-CLASS C 30 CDI AMG (203.018)	(W203)	01/03→		RUN72D	MAG74D	ETS74ND	ETS70D1N-ETS74DI	476420ES
C-CLASS C 320 CDI (203.020)	(W203)	01/05→		RUN95D		ETS92ND-ETS95D1N		434440ES
C-CLASS T-Model C 180 Kompressor (203.246)	(S203)	05/02→		RUN72D	MAG74D	ETS74ND	ETS70D1N-ETS74DI	476420ES
C-CLASS T-Model C 180 (203.235)	(S203)	03/01→05/02		RUN72D	MAG74D	ETS74ND	ETS70D1N-ETS74DI	476420ES
C-CLASS T-Model C 200 Kompressor (203.242)	(S203)	05/02→		RUN72D	MAG74D	ETS74ND	ETS70D1N-ETS74DI	476420ES

	Design		START	RUN	MAGIS	ETS	ETS alternative	ES
MERCEDES								
C-CLASS T-Model C 200 Kompressor (203.245)	(S203)	03/01→05/02		RUN72D	MAG74D	ETS74ND	ETS70D1N-ETS74DI	476420ES
C-CLASS T-Model C 200 CGI Kompressor (203.243)	(S203)	07/03→		RUN72D	MAG74D	ETS74ND	ETS70D1N-ETS74DI	476420ES
C-CLASS T-Model C 230 Kompressor (203.240)	(S203)	02/04→		RUN72D	MAG74D	ETS74ND	ETS70D1N-ETS74DI	476420ES
C-CLASS T-Model C 230 (203.252)	(S203)	01/05→		RUN72D	MAG74D	ETS74ND	ETS70D1N-ETS74DI	476420ES
C-CLASS T-Model C 240 (203.261)	(S203)	03/01→		RUN72D	MAG74D	ETS74ND	ETS70D1N-ETS74DI	476420ES
C-CLASS T-Model C 240 4-matic (203.281)	(S203)	07/02→		RUN72D	MAG74D	ETS74ND	ETS70D1N-ETS74DI	476420ES
C-CLASS T-Model C 280 (203.254)	(S203)	01/05→		RUN72D	MAG74D	ETS74ND	ETS70D1N-ETS74DI	476420ES
C-CLASS T-Model C 280 4-matic (203.292)	(S203)	01/05→		RUN72D	MAG74D	ETS74ND	ETS70D1N-ETS74DI	476420ES
C-CLASS T-Model C 320 (203.264)	(S203)	03/01→		RUN72D	MAG74D	ETS74ND	ETS70D1N-ETS74DI	476420ES
C-CLASS T-Model C 320 4-matic (203.284)	(S203)	07/02→		RUN95D		ETS92ND-ETS95D1N		434440ES
C-CLASS T-Model C 350 (203.256)	(S203)	01/05→		RUN72D	MAG74D	ETS74ND	ETS70D1N-ETS74DI	476420ES
C-CLASS T-Model C 350 4-matic (203.287)	(S203)	01/05→		RUN72D	MAG74D	ETS74ND	ETS70D1N-ETS74DI	476420ES
C-CLASS T-Model C 32 AMG Kompressor (203.265)	(S203)	03/01→			MAG82D	ETS80ND		
C-CLASS T-Model C 55 AMG (203.276)	(S203)	02/04→			MAG82D	ETS80ND		
C-CLASS T-Model C 200 CDI	(S203)	03/01→		RUN72D	MAG74D	ETS74ND	ETS70D1N-ETS74DI	476420ES
C-CLASS T-Model C 200 CDI (203.204)	(S203)	03/01→		RUN72D	MAG74D	ETS74ND	ETS70D1N-ETS74DI	476420ES
C-CLASS T-Model C 200 CDI (203.207)	(S203)	04/03→		RUN72D	MAG74D	ETS74ND	ETS70D1N-ETS74DI	476420ES
C-CLASS T-Model C 220 CDI (203.206)	(S203)	03/01→			MAG82D	ETS80ND		
C-CLASS T-Model C 220 CDI (203.208)	(S203)	02/04→			MAG82D	ETS80ND		
C-CLASS T-Model C 270 CDI (203.216)	(S203)	03/01→			MAG82D	ETS80ND		
C-CLASS T-Model C 320 CDI (203.220)	(S203)	06/05→		RUN95D		ETS92ND-ETS95D1N		434440ES
C-CLASS T-Model C 30 CDI AMG (203.218)	(S203)	01/03→		RUN95D		ETS92ND-ETS95D1N		434440ES
C-CLASS Coupe C 160 Kompressor (203.730)	(CL203)	05/02→		RUN72D	MAG74D	ETS74ND	ETS70D1N-ETS74DI	476420ES
C-CLASS Coupe C 180 Kompressor (203.746)	(CL203)	05/02→		RUN72D	MAG74D	ETS74ND	ETS70D1N-ETS74DI	476420ES
C-CLASS Coupe C 180 (203.735)	(CL203)	03/01→05/02		RUN72D	MAG74D	ETS74ND	ETS70D1N-ETS74DI	476420ES
C-CLASS Coupe C 220	(CL203)	05/02→		RUN62D	MAG62D	ETS62ND	ETS60D3N	438320ES
C-CLASS Coupe C 200 Kompressor (203.742)	(CL203)	05/02→		RUN72D	MAG74D	ETS74ND	ETS70D1N-ETS74DI	476420ES
C-CLASS Coupe C 200 Kompressor (203.745)	(CL203)	03/01→05/02		RUN72D	MAG74D	ETS74ND	ETS70D1N-ETS74DI	476420ES
C-CLASS Coupe C 200 CGI Kompressor (203.743)	(CL203)	07/03→		RUN72D	MAG74D	ETS74ND	ETS70D1N-ETS74DI	476420ES
C-CLASS Coupe C 230 Kompressor (203.740)	(CL203)	05/02→		RUN72D	MAG74D	ETS74ND	ETS70D1N-ETS74DI	476420ES
C-CLASS Coupe C 230 Kompressor (203.747)	(CL203)	03/01→05/02		RUN72D	MAG74D	ETS74ND	ETS70D1N-ETS74DI	476420ES

	Design		START	RUN	MAGIS	ETS	ETS alternative	ES
MERCEDES								
C-CLASS Coupe C 230 (203.752)	(CL203)	01/05→		RUN72D	MAG74D	ETS74ND	ETS70D1N-ETS74DI	476420ES
C-CLASS Coupe C 320 (203.764)	(CL203)	09/02→		RUN95D		ETS92ND-ETS95D1N		434440ES
C-CLASS Coupe C 32 AMG Kompressor (203.765)	(CL203)	05/02→		RUN95D		ETS92ND-ETS95D1N		434440ES
C-CLASS Coupe C 350 (203.756)	(CL203)	01/05→		RUN95D		ETS92ND-ETS95D1N		434440ES
C-CLASS Coupe C 200 CDI (203.707)	(CL203)	07/03→		RUN95D		ETS92ND-ETS95D1N		434440ES
C-CLASS Coupe C 220 CDI (203.706)	(CL203)	03/01→		RUN95D		ETS92ND-ETS95D1N		434440ES
C-CLASS Coupe C 220 CDI (203.708)	(CL203)	02/04→		RUN95D		ETS92ND-ETS95D1N		434440ES
C-CLASS Coupe C 30 CDI AMG (203.718)	(CL203)	09/02→		RUN95D		ETS92ND-ETS95D1N		434440ES
C CLASS C 180 Kompressor (204.046)	(W204)	01/07→		RUN72D				
C CLASS C 200 Kompressor (204.041)	(W204)	01/07→		RUN72D				
C CLASS C 230 (204.052)	(W204)	01/07→		RUN72D				
C CLASS C 230 4-matic (204.085)	(W204)	07/07→		RUN72D				
C CLASS C 280 (204.054)	(W204)	01/07→			MAG82D	ETS80ND		
C CLASS C 280 4-matic (204.081)	(W204)	07/07→			MAG82D	ETS80ND		
C CLASS C 300 (204.054)	(W204)	07/09→			MAG82D	ETS80ND		
C CLASS C 300 4-matic (204.081)	(W204)	07/07→			MAG82D	ETS80ND		
C CLASS C 350 (204.056)	(W204)	01/07→			MAG82D	ETS80ND		
C CLASS C 350 4-matic (204.087)	(W204)	07/07→			MAG82D	ETS80ND		
C CLASS C 350 CGI	(W204)	09/08→		RUN95D				
C CLASS C 63 AMG (204.077)	(W204)	02/08→		RUN95D				
C CLASS C 200 CDI (204.007)	(W204)	01/07→			MAG82D	ETS80ND		
C CLASS C 220 CDI (204.008)	(W204)	01/07→			MAG82D	ETS80ND		
C CLASS C 320 CDI (204.022)	(W204)	01/07→			MAG82D	ETS80ND		
C CLASS C 320 CDI 4-matic (204.089)	(W204)	07/07→			MAG82D	ETS80ND		
C CLASS C 350 CDI (204.022)	(W204)	07/09→		RUN95D				
C CLASS C 350 CDI 4-matic (204.089)	(W204)	07/09→		RUN95D				
C CLASS C 350 CDI (204.025)	(W204)	10/09→		RUN95D				
C CLASS C 350 CDI 4-matic (204.092)	(W204)	10/09→		RUN95D				
C CLASS T-Model C 180 Kompressor	(S204)	01/08→		RUN72D				
C CLASS T-Model C 180 Kompressor	(S204)	08/07→		RUN72D				
C CLASS T-Model C 200 Kompressor	(S204)	08/07→		RUN72D				
C CLASS T-Model C 230	(S204)	08/07→		RUN72D				
C CLASS T-Model C 280	(S204)	08/07→		RUN72D				
C CLASS T-Model C 350	(S204)	08/07→			MAG82D	ETS80ND		
C CLASS T-Model C 63 AMG	(S204)	02/08→		RUN95D				
C CLASS T-Model C 200 CDI	(S204)	08/07→			MAG82D	ETS80ND		
C CLASS T-Model C 220 CDI (204.202)	(S204)	12/08→			MAG82D	ETS80ND		
C CLASS T-Model C 220 CDI	(S204)	08/07→			MAG82D	ETS80ND		
C CLASS T-Model C 320 CDI	(S204)	08/07→		RUN95D		ETS92ND-ETS95D1N		434440ES
C CLASS T-Model C 320 CDI 4-matic	(S204)	08/07→		RUN95D		ETS92ND-ETS95D1N		434440ES
C CLASS T-Model C 350 CDI (204.225)	(S204)	10/09→		RUN95D				
C CLASS T-Model C 350 CDI 4-matic (204.292)	(S204)	10/09→		RUN95D				
CLC-CLASS CLC 180 Kompressor (203.746)		05/08→	AGM70D	RUN72D				

	Design		START	RUN	MAGIS	ETS	ETS alternative	ES
MERCEDES								
CLC-CLASS CLC 200 Kompressor (203.741)		05/08→	AGM70D	RUN72D				
CLC-CLASS CLC 230 (203.752)		05/08→	AGM70D	RUN72D				
CLC-CLASS CLC 350 (203.756)		05/08→	AGM90D	RUN95D				
CLC-CLASS CLC 200 CDI (203.707)		05/08→	AGM90D	RUN95D				
CLC-CLASS CLC 220 CDI (203.708)		05/08→	AGM90D	RUN95D				
CLK 200 (208.335)	(C208)	06/97→06/02		RUN72D	MAG74D	ETS74ND	ETS70D1N-ETS74DI	476420ES
CLK 200 Kompressor (208.344)	(C208)	06/00→06/02		RUN72D	MAG74D	ETS74ND	ETS70D1N-ETS74DI	476420ES
CLK 200 Kompressor (208.345)	(C208)	06/97→06/00		RUN72D	MAG74D	ETS74ND	ETS70D1N-ETS74DI	476420ES
CLK 230 Kompressor (208.347)	(C208)	06/97→06/00		RUN72D	MAG74D	ETS74ND	ETS70D1N-ETS74DI	476420ES
CLK 230 Kompressor (208.348)	(C208)	06/00→06/02		RUN72D	MAG74D	ETS74ND	ETS70D1N-ETS74DI	476420ES
CLK 320 (208.365)	(C208)	06/97→06/02	AGM70D	RUN95D		ETS92ND-ETS95D1N		434440ES
CLK 430 (208.370)	(C208)	07/98→06/02	AGM70D	RUN95D		ETS92ND-ETS95D1N		434440ES
CLK 55 AMG (208.374)	(C208)	08/99→06/02	AGM70D	RUN95D		ETS92ND-ETS95D1N		434440ES
CLK 5.4	(C208)	10/98→07/02	AGM70D	RUN95D		ETS92ND-ETS95D1N		434440ES
CLK Convertible 200 (208.435)	(A208)	03/98→03/02		RUN72D	MAG74D	ETS74ND	ETS70D1N-ETS74DI	476420ES
CLK Convertible 200 Kompressor (208.444)	(A208)	06/00→03/02		RUN72D	MAG74D	ETS74ND	ETS70D1N-ETS74DI	476420ES
CLK Convertible 200 Kompressor (208.445)	(A208)	03/98→06/00		RUN72D	MAG74D	ETS74ND	ETS70D1N-ETS74DI	476420ES
CLK Convertible 230 Kompressor (208.447)	(A208)	03/98→06/00		RUN72D	MAG74D	ETS74ND	ETS70D1N-ETS74DI	476420ES
CLK Convertible 230 Kompressor (208.448)	(A208)	06/00→03/02		RUN72D	MAG74D	ETS74ND	ETS70D1N-ETS74DI	476420ES
CLK Convertible 320 (208.465)	(A208)	03/98→03/02	AGM70D	RUN95D		ETS92ND-ETS95D1N		434440ES
CLK Convertible 430 (208.470)	(A208)	09/98→03/02	AGM70D	RUN95D		ETS92ND-ETS95D1N		434440ES
CLK Convertible 55 AMG (208.474)	(A208)	01/00→03/02	AGM70D	RUN95D		ETS92ND-ETS95D1N		434440ES
CLK 200 Kompressor (209.342)	(C209)	09/02→		RUN72D	MAG74D	ETS74ND	ETS70D1N-ETS74DI	476420ES
CLK 200 Kompressor (209.341)	(C209)	10/06→		RUN62D	MAG62D	ETS62ND	ETS60D3N	438320ES
CLK 200 CGI (209.343)	(C209)	07/03→		RUN72D	MAG74D	ETS74ND	ETS70D1N-ETS74DI	476420ES
CLK 240 (209.361)	(C209)	06/02→		RUN95D		ETS92ND-ETS95D1N		434440ES
CLK 280 (209.354)	(C209)	01/05→		RUN62D	MAG62D	ETS62ND	ETS60D3N	438320ES
CLK 320 (209.365)	(C209)	06/02→		RUN95D		ETS92ND-ETS95D1N		434440ES
CLK 350 (209.356)	(C209)	01/05→		RUN95D		ETS92ND-ETS95D1N		434440ES
CLK 500 (209.375)	(C209)	06/02→		RUN95D		ETS92ND-ETS95D1N		434440ES
CLK 55 AMG (209.376)	(C209)	09/02→		RUN95D		ETS92ND-ETS95D1N		434440ES
CLK CLK DTM AMG	(C209)	06/04→		RUN95D		ETS92ND-ETS95D1N		434440ES
CLK 500 (209.372)	(C209)	06/06→		RUN95D		ETS92ND-ETS95D1N		434440ES
CLK 63 AMG (209.377)	(C209)	04/06→		RUN95D		ETS92ND-ETS95D1N		434440ES
CLK 63 AMG (209.377)	(C209)	05/07→		RUN95D		ETS92ND-ETS95D1N		434440ES
CLK 220 CDI (209.308)	(C209)	01/05→		RUN95D		ETS92ND-ETS95D1N		434440ES
CLK 270 CDI (209.316)	(C209)	10/02→		RUN95D		ETS92ND-ETS95D1N		434440ES
CLK 320 CDI (209.320)	(C209)	01/05→		RUN95D		ETS92ND-ETS95D1N		434440ES
CLK Convertible 200 Kompressor (209.442)	(A209)	02/03→		RUN72D	MAG74D	ETS74ND	ETS70D1N-ETS74DI	476420ES
CLK Convertible 200 Kompressor (209.441)	(A209)	10/06→		RUN62D	MAG62D	ETS62ND	ETS60D3N	438320ES

	Design		START	RUN	MAGIS	ETS	ETS alternative	ES
MERCEDES								
CLK Convertible 200 CGI (209.443)	(A209)	07/03→		RUN72D	MAG74D	ETS74ND	ETS70D1N-ETS74DI	476420ES
CLK Convertible 240 (209.461)	(A209)	02/03→		RUN95D		ETS92ND-ETS95D1N		434440ES
CLK Convertible 280 (209.454)	(A209)	01/05→		RUN62D	MAG62D	ETS62ND	ETS60D3N	438320ES
CLK Convertible 320 (209.465)	(A209)	02/03→	AGM70D	RUN95D		ETS92ND-ETS95D1N		434440ES
CLK Convertible 350 (209.456)	(A209)	01/05→	AGM70D	RUN95D		ETS92ND-ETS95D1N		434440ES
CLK Convertible 500 (209.475)	(A209)	02/03→	AGM80D	RUN95D		ETS92ND-ETS95D1N		434440ES
CLK Convertible 55 AMG (209.476)	(A209)	02/03→	AGM80D	RUN95D		ETS92ND-ETS95D1N		434440ES
CLK Convertible 500 (209.472)	(A209)	06/06→		RUN95D		ETS92ND-ETS95D1N		434440ES
CLK Convertible 63 AMG (209.477)	(A209)	04/06→	AGM90D	RUN95D		ETS92ND-ETS95D1N		434440ES
CLK Convertible 320 CDI (209.420)	(A209)	03/05→	AGM80D	RUN95D		ETS92ND-ETS95D1N		434440ES
Saloon 200 E (124.019)	(W124)	10/92→06/93		RUN62D	MAG62D	ETS62ND	ETS60D3N	438320ES
Saloon 220 E (124.022)	(W124)	10/92→06/93		RUN62D	MAG62D	ETS62ND	ETS60D3N	438320ES
Saloon 280 E (124.028)	(W124)	10/92→06/93		RUN72D	MAG74D	ETS74ND	ETS70D1N-ETS74DI	476420ES
Saloon 320 E (124.032)	(W124)	10/92→06/93		RUN72D	MAG74D	ETS74ND	ETS70D1N-ETS74DI	476420ES
Saloon 400 E 4.2 (124.034)	(W124)	10/92→06/93		RUN72D	MAG74D	ETS74ND	ETS70D1N-ETS74DI	476420ES
Saloon 500 E (124.036)	(W124)	01/91→06/93		RUN72D	MAG74D	ETS74ND	ETS70D1N-ETS74DI	476420ES
Saloon 500 E AMG 6.0	(W124)	01/92→06/93		RUN72D	MAG74D	ETS74ND	ETS70D1N-ETS74DI	476420ES
Saloon 300 D (124.130)	(W124)	06/90→06/93		RUN72D	MAG74D	ETS74ND	ETS70D1N-ETS74DI	476420ES
KOMBI Estate 200 TE (124.079)	(S124)	10/92→06/93		RUN72D	MAG74D	ETS74ND	ETS70D1N-ETS74DI	476420ES
KOMBI Estate 220 TE (124.082)	(S124)	10/92→05/93		RUN72D	MAG74D	ETS74ND	ETS70D1N-ETS74DI	476420ES
KOMBI Estate 280 TE (124.088)	(S124)	10/92→06/93		RUN72D	MAG74D	ETS74ND	ETS70D1N-ETS74DI	476420ES
KOMBI Estate 320 TE (124.092)	(S124)	10/92→06/93		RUN72D	MAG74D	ETS74ND	ETS70D1N-ETS74DI	476420ES
COUPE 220 CE (124.042)	(C124)	10/92→05/93		RUN72D	MAG74D	ETS74ND	ETS70D1N-ETS74DI	476420ES
COUPE 320 CE (124.052)	(C124)	10/92→05/93		RUN72D	MAG74D	ETS74ND	ETS70D1N-ETS74DI	476420ES
CABRIOLET 300 CE-24 (124.061)	(A124)	04/92→06/93		RUN72D	MAG74D	ETS74ND	ETS70D1N-ETS74DI	476420ES
E-CLASS E 200 (124.019)	(W124)	06/93→06/95		RUN72D	MAG74D	ETS74ND	ETS70D1N-ETS74DI	476420ES
E-CLASS E 220 (124.022)	(W124)	06/93→06/95		RUN72D	MAG74D	ETS74ND	ETS70D1N-ETS74DI	476420ES
E-CLASS E 280 (124.028)	(W124)	06/93→06/95		RUN72D	MAG74D	ETS74ND	ETS70D1N-ETS74DI	476420ES
E-CLASS E 280 long (124.029)	(W124)	06/93→06/95		RUN72D	MAG74D	ETS74ND	ETS70D1N-ETS74DI	476420ES
E-CLASS E 300 4-matic (124.230)	(W124)	06/93→06/95		RUN72D	MAG74D	ETS74ND	ETS70D1N-ETS74DI	476420ES
E-CLASS E 320 (124.032)	(W124)	06/93→06/95		RUN72D	MAG74D	ETS74ND	ETS70D1N-ETS74DI	476420ES
E-CLASS E 36 AMG	(W124)	07/94→01/95		RUN72D	MAG74D	ETS74ND	ETS70D1N-ETS74DI	476420ES
E-CLASS E 420 (124.034)	(W124)	06/93→06/95		RUN72D	MAG74D	ETS74ND	ETS70D1N-ETS74DI	476420ES
E-CLASS E 500 (124.036)	(W124)	06/93→06/95		RUN72D	MAG74D	ETS74ND	ETS70D1N-ETS74DI	476420ES
E-CLASS E 60 AMG (124.036)	(W124)	05/94→06/95		RUN72D	MAG74D	ETS74ND	ETS70D1N-ETS74DI	476420ES
E-CLASS E 200 D (124.120)	(W124)	06/93→06/95		RUN72D	MAG74D	ETS74ND	ETS70D1N-ETS74DI	476420ES
E-CLASS E 250 D (124.126, 124.129)	(W124)	07/93→06/95		RUN72D	MAG74D	ETS74ND	ETS70D1N-ETS74DI	476420ES
E-CLASS E 250 Turbo-D (124.128)	(W124)	06/93→06/95		RUN72D	MAG74D	ETS74ND	ETS70D1N-ETS74DI	476420ES
E-CLASS E 300 D (124.131)	(W124)	07/93→06/95		RUN72D	MAG74D	ETS74ND	ETS70D1N-ETS74DI	476420ES
E-CLASS E 300 Turbo-D (124.133)	(W124)	06/93→06/95		RUN72D	MAG74D	ETS74ND	ETS70D1N-ETS74DI	476420ES
E-CLASS E 300 Turbo-D 4-matic (124.333)	(W124)	06/93→06/95		RUN72D	MAG74D	ETS74ND	ETS70D1N-ETS74DI	476420ES
E-CLASS Estate E 200 T (124.079)	(S124)	06/93→06/96		RUN72D	MAG74D	ETS74ND	ETS70D1N-ETS74DI	476420ES
E-CLASS Estate E 220 T (124.082)	(S124)	06/93→06/96		RUN72D	MAG74D	ETS74ND	ETS70D1N-ETS74DI	476420ES
E-CLASS Estate E 280 T (124.088)	(S124)	06/93→06/96		RUN72D	MAG74D	ETS74ND	ETS70D1N-ETS74DI	476420ES
E-CLASS Estate E 280 T (124.088)	(S124)	06/93→06/96		RUN72D	MAG74D	ETS74ND	ETS70D1N-ETS74DI	476420ES

	Design		START	RUN	MAGIS	ETS	ETS alternative	ES
MERCEDES								
E-CLASS Estate E 300 T 4-matic (124.290)	(S124)	06/93→06/96		RUN72D	MAG74D	ETS74ND	ETS70D1N-ETS74DI	476420ES
E-CLASS Estate E 300 TE-24 AMG (124.091)	(S124)	06/93→06/96		RUN72D	MAG74D	ETS74ND	ETS70D1N-ETS74DI	476420ES
E-CLASS Estate E 320 T (124.092)	(S124)	06/93→06/96		RUN72D	MAG74D	ETS74ND	ETS70D1N-ETS74DI	476420ES
E-CLASS Estate E 36 T AMG (124.092)	(S124)	05/94→06/96		RUN72D	MAG74D	ETS74ND	ETS70D1N-ETS74DI	476420ES
E-CLASS Estate E 250 T D (124.186)	(S124)	06/93→06/96		RUN72D	MAG74D	ETS74ND	ETS70D1N-ETS74DI	476420ES
E-CLASS Estate E 250 Turbo D	(S124)	06/93→06/96		RUN72D	MAG74D	ETS74ND	ETS70D1N-ETS74DI	476420ES
E-CLASS Estate E 300 T D (124.191)	(S124)	06/93→06/96		RUN72D	MAG74D	ETS74ND	ETS70D1N-ETS74DI	476420ES
E-CLASS Estate E 300 T Turbo-D (124.193)	(S124)	06/93→06/96		RUN72D	MAG74D	ETS74ND	ETS70D1N-ETS74DI	476420ES
E-CLASS Estate E 300 T Turbo-D 4-matic (124.393)	(S124)	06/93→06/96		RUN72D	MAG74D	ETS74ND	ETS70D1N-ETS74DI	476420ES
E-CLASS Coupe E 200 (124.040)	(C124)	06/93→06/97		RUN72D	MAG74D	ETS74ND	ETS70D1N-ETS74DI	476420ES
E-CLASS Coupe E 220 (124.042)	(C124)	06/93→06/97		RUN72D	MAG74D	ETS74ND	ETS70D1N-ETS74DI	476420ES
E-CLASS Coupe E 320 (124.052)	(C124)	06/93→06/97		RUN72D	MAG74D	ETS74ND	ETS70D1N-ETS74DI	476420ES
E-CLASS Coupe E 36 AMG (124.052)	(C124)	06/93→04/95		RUN72D	MAG74D	ETS74ND	ETS70D1N-ETS74DI	476420ES
E-CLASS Coupe E 36 AMG (124.052)	(C124)	05/94→06/97		RUN72D	MAG74D	ETS74ND	ETS70D1N-ETS74DI	476420ES
E-CLASS Convertible E 200 (124.060)	(A124)	06/93→03/98		RUN72D	MAG74D	ETS74ND	ETS70D1N-ETS74DI	476420ES
E-CLASS Convertible E 220 (124.062)	(A124)	06/93→03/98		RUN72D	MAG74D	ETS74ND	ETS70D1N-ETS74DI	476420ES
E-CLASS Convertible E 320 (124.066)	(A124)	06/93→03/98		RUN95D		ETS92ND-ETS95D1N		434440ES
E-CLASS Convertible E 36 AMG (124.066)	(A124)	05/94→03/98		RUN72D	MAG74D	ETS74ND	ETS70D1N-ETS74DI	476420ES
E-CLASS E 200 (210.035)	(W210)	06/95→08/00		RUN72D	MAG74D	ETS74ND	ETS70D1N-ETS74DI	476420ES
E-CLASS E 200 Kompressor (210.048)	(W210)	08/00→03/02		RUN72D	MAG74D	ETS74ND	ETS70D1N-ETS74DI	476420ES
E-CLASS E 200 Kompressor (210.045)	(W210)	06/97→03/02		RUN72D	MAG74D	ETS74ND	ETS70D1N-ETS74DI	476420ES
E-CLASS E 230 (210.037)	(W210)	06/95→06/97		RUN72D	MAG74D	ETS74ND	ETS70D1N-ETS74DI	476420ES
E-CLASS E 240 (210.061)	(W210)	06/97→08/00		RUN72D	MAG74D	ETS74ND	ETS70D1N-ETS74DI	476420ES
E-CLASS E 240 (210.062)	(W210)	08/00→03/02		RUN72D	MAG74D	ETS74ND	ETS70D1N-ETS74DI	476420ES
E-CLASS E 280 (210.053)	(W210)	01/96→06/97		RUN95D		ETS92ND-ETS95D1N		434440ES
E-CLASS E 280 (210.063)	(W210)	12/96→03/02		RUN72D	MAG74D	ETS74ND	ETS70D1N-ETS74DI	476420ES
E-CLASS E 280 4-matic (210.081)	(W210)	12/96→03/02		RUN72D	MAG74D	ETS74ND	ETS70D1N-ETS74DI	476420ES
E-CLASS E 320 (210.055)	(W210)	06/95→06/97		RUN95D		ETS92ND-ETS95D1N		434440ES
E-CLASS E 320 (210.065)	(W210)	06/97→03/02		RUN72D	MAG74D	ETS74ND	ETS70D1N-ETS74DI	476420ES
E-CLASS E 320 4-matic (210.082)	(W210)	06/97→03/02		RUN72D	MAG74D	ETS74ND	ETS70D1N-ETS74DI	476420ES
E-CLASS E 36 AMG	(W210)	04/96→01/98		RUN72D	MAG74D	ETS74ND	ETS70D1N-ETS74DI	476420ES
E-CLASS E 420 (210.072)	(W210)	01/96→06/97		RUN72D	MAG74D	ETS74ND	ETS70D1N-ETS74DI	476420ES
E-CLASS E 430 (210.070)	(W210)	06/97→03/02		RUN72D	MAG74D	ETS74ND	ETS70D1N-ETS74DI	476420ES
E-CLASS E 430 4-matic (210.083)	(W210)	05/99→03/02		RUN72D	MAG74D	ETS74ND	ETS70D1N-ETS74DI	476420ES
E-CLASS E 50 AMG (210.072)	(W210)	02/96→08/97		RUN72D	MAG74D	ETS74ND	ETS70D1N-ETS74DI	476420ES
E-CLASS E 55 AMG (210.074)	(W210)	08/97→03/02		RUN72D	MAG74D	ETS74ND	ETS70D1N-ETS74DI	476420ES
E-CLASS E 55 AMG 4-matic (210.083)	(W210)	03/01→03/02		RUN72D	MAG74D	ETS74ND	ETS70D1N-ETS74DI	476420ES
E-CLASS E 200 D (210.003)	(W210)	01/96→03/02		RUN72D	MAG74D	ETS74ND	ETS70D1N-ETS74DI	476420ES
E-CLASS E 200 CDI (210.007)	(W210)	06/98→03/02		RUN72D	MAG74D	ETS74ND	ETS70D1N-ETS74DI	476420ES
E-CLASS E 200 CDI (210.007)	(W210)	07/99→03/02		RUN72D	MAG74D	ETS74ND	ETS70D1N-ETS74DI	476420ES
E-CLASS E 220 CDI (210.006)	(W210)	06/98→07/99		RUN72D	MAG74D	ETS74ND	ETS70D1N-ETS74DI	476420ES
E-CLASS E 220 CDI (210.006)	(W210)	07/99→03/02		RUN72D	MAG74D	ETS74ND	ETS70D1N-ETS74DI	476420ES

	Design		START	RUN	MAGIS	ETS	ETS alternative	ES
MERCEDES								
E-CLASS E 220 D	(W210)	05/96→03/02		RUN72D	MAG74D	ETS74ND	ETS70D1N-ETS74DI	476420ES
E-CLASS E 220 D (210.004)	(W210)	06/95→07/99		RUN72D	MAG74D	ETS74ND	ETS70D1N-ETS74DI	476420ES
E-CLASS E 250 D (210.010)	(W210)	06/95→07/99		RUN72D	MAG74D	ETS74ND	ETS70D1N-ETS74DI	476420ES
E-CLASS E 250 Turbo-D (210.015)	(W210)	06/97→07/99		RUN72D	MAG74D	ETS74ND	ETS70D1N-ETS74DI	476420ES
E-CLASS E 270 CDI (210.016)	(W210)	07/99→03/02		RUN72D	MAG74D	ETS74ND	ETS70D1N-ETS74DI	476420ES
E-CLASS E 290 Turbo-D (210.017)	(W210)	03/96→07/99		RUN72D	MAG74D	ETS74ND	ETS70D1N-ETS74DI	476420ES
E-CLASS E 300 D (210.020)	(W210)	06/95→06/97		RUN72D	MAG74D	ETS74ND	ETS70D1N-ETS74DI	476420ES
E-CLASS E 300 Turbo-D (210.025)	(W210)	12/96→07/99		RUN72D	MAG74D	ETS74ND	ETS70D1N-ETS74DI	476420ES
E-CLASS E 320 CDI (210.026)	(W210)	07/99→03/02		RUN72D	MAG74D	ETS74ND	ETS70D1N-ETS74DI	476420ES
E-CLASS Estate E 200 T (210.235)	(S210)	06/96→08/00		RUN72D	MAG74D	ETS74ND	ETS70D1N-ETS74DI	476420ES
E-CLASS Estate E 200 T Kompressor (210.248)	(S210)	08/00→03/03		RUN72D	MAG74D	ETS74ND	ETS70D1N-ETS74DI	476420ES
E-CLASS Estate E 200 T Kompressor (210.245)	(S210)	06/97→03/03		RUN72D	MAG74D	ETS74ND	ETS70D1N-ETS74DI	476420ES
E-CLASS Estate E 230 T (210.237)	(S210)	06/96→06/97		RUN72D	MAG74D	ETS74ND	ETS70D1N-ETS74DI	476420ES
E-CLASS Estate E 240 T (210.261)	(S210)	06/97→03/03		RUN72D	MAG74D	ETS74ND	ETS70D1N-ETS74DI	476420ES
E-CLASS Estate E 240 T (210.262)	(S210)	08/00→03/03		RUN72D	MAG74D	ETS74ND	ETS70D1N-ETS74DI	476420ES
E-CLASS Estate E 280 T (210.263)	(S210)	12/96→03/03		RUN95D		ETS92ND-ETS95D1N		434440ES
E-CLASS Estate E 280 T 4-matic (210.281)	(S210)	12/96→03/03		RUN95D		ETS92ND-ETS95D1N		434440ES
E-CLASS Estate E 320 T (210.265)	(S210)	12/96→03/03		RUN95D		ETS92ND-ETS95D1N		434440ES
E-CLASS Estate E 320 T 4-matic (210.282)	(S210)	12/96→03/03		RUN95D		ETS92ND-ETS95D1N		434440ES
E-CLASS Estate E 420 T (210.272)	(S210)	06/96→06/97		RUN95D		ETS92ND-ETS95D1N		434440ES
E-CLASS Estate E 430 T (210.270)	(S210)	06/97→03/03		RUN95D		ETS92ND-ETS95D1N		434440ES
E-CLASS Estate E 430 T 4-matic (210.283)	(S210)	05/99→03/03		RUN95D		ETS92ND-ETS95D1N		434440ES
E-CLASS Estate E 55 T AMG (210.274)	(S210)	08/97→03/03		RUN95D		ETS92ND-ETS95D1N		434440ES
E-CLASS Estate E 55 T AMG 4-matic (210.283)	(S210)	03/01→03/03		RUN95D		ETS92ND-ETS95D1N		434440ES
E-CLASS Estate E 220 T CDI (210.206)	(S210)	06/98→07/99		RUN95D		ETS92ND-ETS95D1N		434440ES
E-CLASS Estate E 220 T CDI (210.206)	(S210)	07/99→03/03		RUN95D		ETS92ND-ETS95D1N		434440ES
E-CLASS Estate E 250 T D (210.210)	(S210)	06/96→07/99		RUN95D		ETS92ND-ETS95D1N		434440ES
E-CLASS Estate E 250 T Turbo-D (210.215)	(S210)	06/97→07/99		RUN95D		ETS92ND-ETS95D1N		434440ES
E-CLASS Estate E 270 T CDI (210.216)	(S210)	07/99→03/03		RUN95D		ETS92ND-ETS95D1N		434440ES
E-CLASS Estate E 290 T Turbo-D (210.217)	(S210)	06/96→07/99		RUN95D		ETS92ND-ETS95D1N		434440ES
E-CLASS Estate E 300 T Turbo-D (210.225)	(S210)	12/96→07/99		RUN95D		ETS92ND-ETS95D1N		434440ES
E-CLASS Estate E 320 T CDI (210.226)	(S210)	07/99→03/03		RUN95D		ETS92ND-ETS95D1N		434440ES
E-CLASS E 320 4-matic (211.082)	(W211)	03/03→		RUN95D		ETS92ND-ETS95D1N		434440ES
E-CLASS E 270 CDI (211.016)	(W211)	03/02→		RUN95D		ETS92ND-ETS95D1N		434440ES
S-CLASS S 280 (140.028)	(W140)	02/93→10/98		RUN95D		ETS92ND-ETS95D1N		434440ES
S-CLASS 300 SE 2.8 (140.028)	(W140)	01/93→10/98		RUN95D		ETS92ND-ETS95D1N		434440ES
S-CLASS 300 SE,SEL/S320 (140.032, 140.033)	(W140)	03/91→10/98		RUN95D		ETS92ND-ETS95D1N		434440ES

	Design		START	RUN	MAGIS	ETS	ETS alternative	ES
MERCEDES								
S-CLASS S 420 (140.042)	(W140)	01/93→10/98		RUN95D		ETS92ND-ETS95D1N		434440ES
S-CLASS 400 SE,SEL/S420 (140.042, 140.043)	(W140)	02/91→10/98		RUN95D		ETS92ND-ETS95D1N		434440ES
S-CLASS S 500 (140.050, 140.051)	(W140)	01/93→10/98		RUN95D		ETS92ND-ETS95D1N		434440ES
S-CLASS 500 SE,SEL (140.050, 140.051)	(W140)	02/91→10/98		RUN95D		ETS92ND-ETS95D1N		434440ES
S-CLASS S 600 (140.056, 140.057)	(W140)	01/93→10/98		RUN95D		ETS92ND-ETS95D1N		434440ES
S-CLASS 600 SE,SEL (140.056, 140.057)	(W140)	04/91→12/92		RUN95D		ETS92ND-ETS95D1N		434440ES
S-CLASS S 300 Turbo-D (140.135)	(W140)	05/96→10/98		RUN95D		ETS92ND-ETS95D1N		434440ES
S-CLASS S 350 Turbo-D (140.134)	(W140)	01/93→10/98		RUN95D		ETS92ND-ETS95D1N		434440ES
S-CLASS Coupe SEC/CL 420 (140.063)	(C140)	10/94→02/99		RUN95D		ETS92ND-ETS95D1N		434440ES
S-CLASS Coupe SEC/CL 500 (140.070)	(C140)	10/92→02/99		RUN95D		ETS92ND-ETS95D1N		434440ES
S-CLASS Coupe SEC/CL 600 (140.076)	(C140)	09/92→02/99		RUN95D		ETS92ND-ETS95D1N		434440ES
S-CLASS S 280 (220.063, 220.163)	(W220)	10/98→08/05	AGM90D	RUN95D		ETS92ND-ETS95D1N		434440ES
S-CLASS S 320 (220.065, 220.165)	(W220)	10/98→08/05	AGM90D	RUN95D		ETS92ND-ETS95D1N		434440ES
S-CLASS S 350 (220.067, 220.167)	(W220)	09/02→08/05		RUN95D		ETS92ND-ETS95D1N		434440ES
S-CLASS S 350 4-matic (220.087, 220.187)	(W220)	06/03→08/05	AGM90D	RUN95D		ETS92ND-ETS95D1N		434440ES
S-CLASS S 430 (220.070, 220.170)	(W220)	10/98→08/05		RUN95D		ETS92ND-ETS95D1N		434440ES
S-CLASS S 430 4-matic (220.083, 220.183)	(W220)	09/02→08/05	AGM90D	RUN95D		ETS92ND-ETS95D1N		434440ES
S-CLASS S 500 (220.075, 220.175, 220.875)	(W220)	10/98→08/05		RUN95D		ETS92ND-ETS95D1N		434440ES
S-CLASS S 500 4-matic (220.084, 220.184)	(W220)	09/02→08/05	AGM90D	RUN95D		ETS92ND-ETS95D1N		434440ES
S-CLASS S 55 AMG (220.073, 220.173)	(W220)	04/99→08/05		RUN95D		ETS92ND-ETS95D1N		434440ES
S-CLASS S 55 AMG Kompressor (220.074, 220.174)	(W220)	06/02→08/05	AGM90D	RUN95D		ETS92ND-ETS95D1N		434440ES
S-CLASS S 600 (220.176)	(W220)	09/02→08/05		RUN95D		ETS92ND-ETS95D1N		434440ES
S-CLASS S 600 (220.878, 220.178)	(W220)	01/00→08/05	AGM90D	RUN95D		ETS92ND-ETS95D1N		434440ES
S-CLASS S 63 AMG	(W220)	09/01→08/05		RUN95D		ETS92ND-ETS95D1N		434440ES
S-CLASS S 65 AMG (220.179)	(W220)	03/04→08/05		RUN95D		ETS92ND-ETS95D1N		434440ES
S-CLASS S 320 CDI (220.026, 220.126)	(W220)	08/99→09/02		RUN95D		ETS92ND-ETS95D1N		434440ES
S-CLASS S 320 CDI (220.025, 220.125)	(W220)	09/02→08/05		RUN95D		ETS92ND-ETS95D1N		434440ES
S-CLASS S 400 CDI (220.028, 220.128)	(W220)	06/00→08/05		RUN95D		ETS92ND-ETS95D1N		434440ES
S-CLASS S 400 CDI (220.028, 220.128)	(W220)	06/03→08/05		RUN95D		ETS92ND-ETS95D1N		434440ES
S-CLASS S 350 (221.056, 221.156)	(W221)	10/05→		RUN95D		ETS92ND-ETS95D1N		434440ES
S-CLASS Coupe CL 500 (215.375)	(C215)	03/99→03/06		RUN95D		ETS92ND-ETS95D1N		434440ES
S-CLASS Coupe CL 55 AMG (215.373)	(C215)	10/99→03/06		RUN95D		ETS92ND-ETS95D1N		434440ES
S-CLASS Coupe CL 55 AMG Kompressor (215.374)	(C215)	06/02→03/06		RUN95D		ETS92ND-ETS95D1N		434440ES
S-CLASS Coupe CL 600 (215.376)	(C215)	09/02→03/06		RUN95D		ETS92ND-ETS95D1N		434440ES
S-CLASS Coupe CL 600 (215.378)	(C215)	03/99→03/06	AGM90D	RUN95D		ETS92ND-ETS95D1N		434440ES
S-CLASS Coupe CL 63 AMG (215.378)	(C215)	09/01→03/06		RUN95D		ETS92ND-ETS95D1N		434440ES
S-CLASS Coupe CL 65 AMG (215.379)	(C215)	09/03→03/06		RUN95D		ETS92ND-ETS95D1N		434440ES
S-CLASS Coupe CL 500 (216.371)	(C216)	06/06→		RUN95D		ETS92ND-ETS95D1N		434440ES

	Design		START	RUN	MAGIS	ETS	ETS alternative	ES
MERCEDES								
S-CLASS Coupe CL 500 4-matic		06/06→	AGM90D					
S-CLASS Coupe CL 600 (216.376)	(C216)	05/06→	AGM90D	RUN95D		ETS92ND-ETS95D1N		434440ES
S-CLASS Coupe CL 65 AMG (216.379)	(C216)	10/06→	AGM90D	RUN95D		ETS92ND-ETS95D1N		434440ES
S-CLASS Coupe CL 63 AMG (216.377)	(C216)	10/06→	AGM90D	RUN95D		ETS92ND-ETS95D1N		434440ES
SL 280 (129.058)	(R129)	08/93→10/01		RUN95D		ETS92ND-ETS95D1N		434440ES
SL 280 (129.059)	(R129)	05/98→10/01		RUN95D		ETS92ND-ETS95D1N		434440ES
SL 320 (129.064)	(R129)	05/98→10/01		RUN95D		ETS92ND-ETS95D1N		434440ES
SL 320 (129.063)	(R129)	09/93→10/01		RUN95D		ETS92ND-ETS95D1N		434440ES
SL 500 (129.068)	(R129)	05/98→10/01		RUN95D		ETS92ND-ETS95D1N		434440ES
SL 500 (129.067)	(R129)	09/92→10/01		RUN95D		ETS92ND-ETS95D1N		434440ES
SL 55 AMG (129.068)	(R129)	03/00→10/01		RUN95D		ETS92ND-ETS95D1N		434440ES
SL 55 AMG	(R129)	08/99→07/01		RUN72D	MAG74D	ETS74ND	ETS70D1N-ETS74DI	476420ES
SL 60 AMG (129.067)	(R129)	05/97→10/01		RUN95D		ETS92ND-ETS95D1N		434440ES
SL 600 (129.076)	(R129)	07/92→10/01		RUN95D		ETS92ND-ETS95D1N		434440ES
SL 600 SL	(R129)	02/92→05/93		RUN72D	MAG74D	ETS74ND	ETS70D1N-ETS74DI	476420ES
SL 55 AMG (230.474)	(R230)	10/01→06/02		RUN95D		ETS92ND-ETS95D1N		434440ES
SLK 200 (170.435)	(R170)	09/96→03/00		RUN72D	MAG74D	ETS74ND	ETS70D1N-ETS74DI	476420ES
SLK 200 Kompressor (170.444)	(R170)	03/00→04/04		RUN72D	MAG74D	ETS74ND	ETS70D1N-ETS74DI	476420ES
SLK 200 Kompressor (170.445)	(R170)	10/96→03/00		RUN72D	MAG74D	ETS74ND	ETS70D1N-ETS74DI	476420ES
SLK 230 Kompressor (170.447)	(R170)	09/96→03/00		RUN72D	MAG74D	ETS74ND	ETS70D1N-ETS74DI	476420ES
SLK 230 Kompressor (170.449)	(R170)	03/00→04/04		RUN72D	MAG74D	ETS74ND	ETS70D1N-ETS74DI	476420ES
SLK 320 (170.465)	(R170)	03/00→04/04		RUN72D	MAG74D	ETS74ND	ETS70D1N-ETS74DI	476420ES
SLK 32 AMG Kompressor (170.466)	(R170)	03/01→04/04		RUN72D	MAG74D	ETS74ND	ETS70D1N-ETS74DI	476420ES
SLK 200 Kompressor (171.442)	(R171)	03/04→		RUN72D	MAG74D	ETS74ND	ETS70D1N-ETS74DI	476420ES
SLK 200 Kompressor (171.445)	(R171)	01/08→		RUN72D	MAG74D	ETS74ND	ETS70D1N-ETS74DI	476420ES
SLK 280 (171.454)	(R171)	01/05→		RUN72D	MAG74D	ETS74ND	ETS70D1N-ETS74DI	476420ES
SLK 350 (171.456)	(R171)	06/04→		RUN72D	MAG74D	ETS74ND	ETS70D1N-ETS74DI	476420ES
SLK 350 (171.458)	(R171)	01/08→		RUN72D	MAG74D	ETS74ND	ETS70D1N-ETS74DI	476420ES
SLK 55 AMG (171.473)	(R171)	06/04→		RUN72D	MAG74D	ETS74ND	ETS70D1N-ETS74DI	476420ES
M-CLASS ML 230 (163.136)	(W163)	02/98→06/05		RUN95D		ETS92ND-ETS95D1N		434440ES
M-CLASS ML 320 (163.154)	(W163)	02/98→08/02		RUN95D		ETS92ND-ETS95D1N		434440ES
M-CLASS ML 350 (163.157)	(W163)	08/02→06/05		RUN95D		ETS92ND-ETS95D1N		434440ES
M-CLASS ML 350	(W163)	02/03→06/05		RUN95D		ETS92ND-ETS95D1N		434440ES
M-CLASS ML 430 (163.172)	(W163)	02/98→06/05		RUN95D		ETS92ND-ETS95D1N		434440ES
M-CLASS ML 500 (163.175)	(W163)	09/01→06/05		RUN95D		ETS92ND-ETS95D1N		434440ES
M-CLASS ML 55 AMG (163.174)	(W163)	02/00→06/05		RUN95D		ETS92ND-ETS95D1N		434440ES
M-CLASS ML 270 CDI (163.113)	(W163)	12/99→06/05		RUN95D		ETS92ND-ETS95D1N		434440ES
M-CLASS ML 400 CDI (163.128)	(W163)	09/01→06/05		RUN95D		ETS92ND-ETS95D1N		434440ES
G-CLASS 230 GE (461.238, 461.239)	(W461)	02/93→		RUN72D	MAG74D	ETS74ND	ETS70D1N-ETS74DI	476420ES
G-CLASS 230 GE (461)	(W461)	06/93→		RUN72D	MAG74D	ETS74ND	ETS70D1N-ETS74DI	476420ES
G-CLASS 250 GD (461)	(W461)	02/90→		RUN95D		ETS92ND-ETS95D1N		434440ES
G-CLASS 290 GD/G 290 D (461.337, 461.338)	(W461)	04/92→		RUN95D		ETS92ND-ETS95D1N		434440ES
G-CLASS G 290 TD (461.335, 461.336)	(W461)	07/97→		RUN95D		ETS92ND-ETS95D1N		434440ES
G-CLASS 230 GE (463.224, 463.225)	(W463)	06/90→06/93		RUN72D	MAG74D	ETS74ND	ETS70D1N-ETS74DI	476420ES
G-CLASS 300 GE (463.227, 463.228)	(W463)	06/90→		RUN95D		ETS92ND-ETS95D1N		434440ES
G-CLASS 300 GE (463)	(W463)	06/90→		RUN95D		ETS92ND-ETS95D1N		434440ES

	Design		START	RUN	MAGIS	ETS	ETS alternative	ES
MERCEDES								
G-CLASS G 320 (463.230, 463.231)	(W463)	09/94→12/97		RUN95D		ETS92ND-ETS95D1N		434440ES
G-CLASS G 320 (463.232, 463.233)	(W463)	07/97→		RUN95D		ETS92ND-ETS95D1N		434440ES
G-CLASS G 36 AMG	(W463)	01/95→		RUN95D		ETS92ND-ETS95D1N		434440ES
G-CLASS G 500 E (463.228)	(W463)	09/93→		RUN95D		ETS92ND-ETS95D1N		434440ES
G-CLASS G 500 (463.247, 463.248, 463.249)	(W463)	04/98→		RUN95D		ETS92ND-ETS95D1N		434440ES
G-CLASS G 55 AMG (463.243, 463.246)	(W463)	04/99→		RUN95D		ETS92ND-ETS95D1N		434440ES
G-CLASS G 55 AMG	(W463)	06/04→		RUN95D		ETS92ND-ETS95D1N		434440ES
G-CLASS G 55 AMG 4x4	(W463)	08/06→		RUN95D		ETS92ND-ETS95D1N		434440ES
G-CLASS 250 GD (463)	(W463)	06/90→		RUN95D		ETS92ND-ETS95D1N		434440ES
G-CLASS G 270 CDI (463.322, 463.323)	(W463)	10/01→		RUN95D		ETS92ND-ETS95D1N		434440ES
G-CLASS G 300 TD (463.330, 463.331)	(W463)	08/96→		RUN95D		ETS92ND-ETS95D1N		434440ES
G-CLASS G 320 CDI	(W463)	09/06→		RUN95D		ETS92ND-ETS95D1N		434440ES
G-CLASS 350 G Turbo D (463.320, 463.321)	(W463)	09/91→		RUN95D		ETS92ND-ETS95D1N		434440ES
G-CLASS G 400 CDI (463.332, 463.333)	(W463)	12/00→		RUN95D		ETS92ND-ETS95D1N		434440ES
G-CLASS Cabrio 200 GE (463.221)	(W463)	01/90→07/93		RUN72D	MAG74D	ETS74ND	ETS70D1N-ETS74DI	476420ES
G-CLASS Cabrio 230 GE (463.204)	(W463)	06/90→02/93		RUN72D	MAG74D	ETS74ND	ETS70D1N-ETS74DI	476420ES
G-CLASS Cabrio 320 GE (463.208)	(W463)	09/94→11/97		RUN95D		ETS92ND-ETS95D1N		434440ES
G-CLASS Cabrio G 320 (463.209)	(W463)	11/97→		RUN95D		ETS92ND-ETS95D1N		434440ES
G-CLASS Cabrio G 500 (463)	(W463)	04/98→		RUN95D		ETS92ND-ETS95D1N		434440ES
G-CLASS Cabrio G 320 CDI	(W463)	09/06→		RUN95D		ETS92ND-ETS95D1N		434440ES
G-CLASS Cabrio 300 GD (463.307)	(W463)	12/90→09/97		RUN95D		ETS92ND-ETS95D1N		434440ES
G-CLASS Cabrio G 300 TD (463.308)	(W463)	09/96→		RUN95D		ETS92ND-ETS95D1N		434440ES
G-CLASS Cabrio 350 G Turbo-D (463.300)	(W463)	09/91→09/97		RUN95D		ETS92ND-ETS95D1N		434440ES
G-CLASS Cabrio G 400 CDI (463.309)	(W463)	12/00→		RUN95D		ETS92ND-ETS95D1N		434440ES
GL-CLASS GL 450 (164.871)	(X164)	09/06→		RUN95D		ETS92ND-ETS95D1N		434440ES
GL-CLASS GL 500 (164.886)	(X164)	09/06→		RUN95D		ETS92ND-ETS95D1N		434440ES
GL-CLASS GL 320 CDI (164.822)	(X164)	09/06→05/09		RUN95D		ETS92ND-ETS95D1N		434440ES
GL-CLASS GL 420 CDI (164.828)	(X164)	09/06→05/09		RUN95D		ETS92ND-ETS95D1N		434440ES
100 Bus D	(631)	12/90→12/94		RUN72D	MAG74D	ETS74ND	ETS70D1N-ETS74DI	476420ES
100 Bus 2.0 D	(631)	09/93→04/96		RUN72D	MAG74D	ETS74ND	ETS70D1N-ETS74DI	476420ES
100 Bus D (631.333, 631.343, 631.334, 631.344)	(631)	12/90→02/96		RUN95D		ETS92ND-ETS95D1N		434440ES
100 Box 2.0 D	(631)	09/93→04/96		RUN72D	MAG74D	ETS74ND	ETS70D1N-ETS74DI	476420ES
100 Box D (631.332, 631.342)	(631)	12/90→02/96		RUN95D		ETS92ND-ETS95D1N		434440ES
100 Flatbed / Chassis D (631.340)	(631)	12/90→02/96		RUN95D		ETS92ND-ETS95D1N		434440ES
V-CLASS V 200 (638.214, 638.294)	(638/2)	02/97→07/03		RUN95D		ETS92ND-ETS95D1N		434440ES
V-CLASS V 230 (638.234, 638.294)	(638/2)	10/96→07/03		RUN95D		ETS92ND-ETS95D1N		434440ES
V-CLASS V 280 (638.244, 638.294)	(638/2)	08/97→07/03		RUN95D		ETS92ND-ETS95D1N		434440ES
V-CLASS V 200 CDI (638.294)	(638/2)	03/99→07/03		RUN95D		ETS92ND-ETS95D1N		434440ES
V-CLASS V 220 CDI (638.294)	(638/2)	03/99→07/03		RUN95D		ETS92ND-ETS95D1N		434440ES
V-CLASS V 230 TD (638.274)	(638/2)	09/96→07/03		RUN95D		ETS92ND-ETS95D1N		434440ES
VIANO 3.2	(W639)	09/03→	AGM80D	RUN72D	MAG74D	ETS74ND	ETS70D1N-ETS74DI	476420ES
VIANO 3.2	(W639)	09/03→		RUN72D	MAG74D	ETS74ND	ETS70D1N-ETS74DI	476420ES
VIANO 3.5 126	(W639)	09/07→	AGM80D	RUN72D				

	Design		START	RUN	MAGIS	ETS	ETS alternative	ES
MERCEDES								
VIANO 3.7	(W639)	06/04→	AGM80D	RUN72D	MAG74D	ETS74ND	ETS70D1N-ETS74DI	476420ES
VIANO CDI 2.2	(W639)	09/03→		RUN95D		ETS92ND-ETS95D1N		434440ES
VIANO CDI 2.2 4-matic	(W639)	07/05→		RUN95D		ETS92ND-ETS95D1N		434440ES
VIANO CDI 2.0	(W639)	08/05→		RUN95D		ETS92ND-ETS95D1N		434440ES
VIANO CDI 2.2	(W639)	09/03→		RUN95D		ETS92ND-ETS95D1N		434440ES
VIANO CDI 2.2 4-matic	(W639)	07/05→		RUN95D		ETS92ND-ETS95D1N		434440ES
VIANO 3.0 CDI	(W639)	03/06→	AGM80D	RUN95D		ETS92ND-ETS95D1N		434440ES
VITO Bus 113 2.0 (638.114, 638.194)	(638)	02/96→07/03	AGM70D	RUN72D	MAG74D	ETS74ND	ETS70D1N-ETS74DI	476420ES
VITO Bus 114 2.3 (638.134, 638.194)	(638)	12/96→07/03	AGM70D	RUN72D	MAG74D	ETS74ND	ETS70D1N-ETS74DI	476420ES
VITO Bus 108 CDI 2.2 (638.194)	(638)	03/99→07/03		RUN95D		ETS92ND-ETS95D1N		434440ES
VITO Bus 110 CDI 2.2 (638.194)	(638)	03/99→07/03		RUN95D		ETS92ND-ETS95D1N		434440ES
VITO Bus 112 CDI 2.2 (638.194)	(638)	03/99→07/03		RUN95D		ETS92ND-ETS95D1N		434440ES
VITO Bus 108 D 2.3 (638.164)	(638)	02/96→07/03		RUN95D		ETS92ND-ETS95D1N		434440ES
VITO Bus 110 TD 2.3 (638.174)	(638)	02/96→07/03		RUN95D		ETS92ND-ETS95D1N		434440ES
VITO Box 113 2.0 (638.014, 638.094)	(638)	03/97→07/03		RUN72D	MAG74D	ETS74ND	ETS70D1N-ETS74DI	476420ES
VITO Box 114 2.3 (638.034, 638.094)	(638)	03/97→07/03		RUN72D	MAG74D	ETS74ND	ETS70D1N-ETS74DI	476420ES
VITO Box 108 CDI 2.2 (638.094)	(638)	03/99→07/03		RUN95D		ETS92ND-ETS95D1N		434440ES
VITO Box 110 CDI 2.2 (638.094)	(638)	03/99→07/03		RUN95D		ETS92ND-ETS95D1N		434440ES
VITO Box 112 CDI 2.2 (638.094)	(638)	03/99→07/03	AGM80D	RUN95D		ETS92ND-ETS95D1N		434440ES
VITO Box 108 D 2.3 (638.064)	(638)	03/97→07/03		RUN95D		ETS92ND-ETS95D1N		434440ES
VITO Box 110 D 2.3 (638.074)	(638)	03/97→07/03		RUN95D		ETS92ND-ETS95D1N		434440ES
VITO Bus 119	(W639)	09/03→		RUN72D	MAG74D	ETS74ND	ETS70D1N-ETS74DI	476420ES
VITO Bus 122	(W639)	09/03→		RUN72D	MAG74D	ETS74ND	ETS70D1N-ETS74DI	476420ES
VITO Bus 126	(W639)	09/07→	AGM70D	RUN72D				
VITO Bus 123	(W639)	06/04→	AGM70D	RUN72D	MAG74D	ETS74ND	ETS70D1N-ETS74DI	476420ES
VITO Bus 109 CDI 2.2	(W639)	09/03→		RUN95D		ETS92ND-ETS95D1N		434440ES
VITO Bus 109 CDI 2.2 4x4	(W639)	09/07→		RUN95D		ETS92ND-ETS95D1N		434440ES
VITO Bus 109 CDI 2.2	(W639)	09/06→		RUN95D		ETS92ND-ETS95D1N		434440ES
VITO Bus 111 CDI 2.2	(W639)	09/03→		RUN95D		ETS92ND-ETS95D1N		434440ES
VITO Bus 111 CDI 2.2 4x4	(W639)	09/07→		RUN95D		ETS92ND-ETS95D1N		434440ES
VITO Bus 111 CDI 2.2	(W639)	09/07→		RUN95D		ETS92ND-ETS95D1N		434440ES
VITO Bus 115 CDI 2.2	(W639)	09/03→		RUN95D		ETS92ND-ETS95D1N		434440ES
VITO Bus 115 CDI 2.2 4x4	(W639)	09/07→		RUN95D		ETS92ND-ETS95D1N		434440ES
VITO Bus 120 CDI	(W639)	09/07→		RUN95D		ETS92ND-ETS95D1N		434440ES
VITO Box 119 3.2	(W639)	09/03→		RUN72D	MAG74D	ETS74ND	ETS70D1N-ETS74DI	476420ES
VITO Box 122 3.2	(W639)	09/03→	AGM70D	RUN72D	MAG74D	ETS74ND	ETS70D1N-ETS74DI	476420ES
VITO Box 126	(W639)	09/07→		RUN72D				
VITO Box 123 (639.603)	(W639)	06/04→07/08		RUN72D	MAG74D	ETS74ND	ETS70D1N-ETS74DI	476420ES
VITO Box 109 CDI 2.2	(W639)	09/03→		RUN95D		ETS92ND-ETS95D1N		434440ES
VITO Box 109 CDi	(W639)	08/06→		RUN95D		ETS92ND-ETS95D1N		434440ES
VITO Box 111 CDI 2.2	(W639)	09/03→		RUN95D		ETS92ND-ETS95D1N		434440ES
VITO Box 111 CDI 2.2 4x4	(W639)	09/07→		RUN95D		ETS92ND-ETS95D1N		434440ES
VITO Box 111 CDI 2.2	(W639)	09/07→		RUN95D		ETS92ND-ETS95D1N		434440ES
VITO Box 115 CDI 2.2	(W639)	09/03→		RUN95D		ETS92ND-ETS95D1N		434440ES
VITO Box 115 CDI 2.2 4x4	(W639)	09/07→		RUN95D		ETS92ND-ETS95D1N		434440ES
VITO Box 120 CDI	(W639)	09/07→		RUN95D		ETS92ND-ETS95D1N		434440ES
T1 Bus 308 D 2.3	(602)	05/90→02/96		RUN72D	MAG74D	ETS74ND	ETS70D1N-ETS74DI	476420ES

	Design		START	RUN	MAGIS	ETS	ETS alternative	ES
MERCEDES								
T1 Bus 310 D 2.9	(602)	06/90→02/96		RUN72D	MAG74D	ETS74ND	ETS70D1N-ETS74DI	476420ES
SPRINTER 2-t Bus 214 NGT	(901, 902)	04/00→05/06		RUN95D		ETS92ND-ETS95D1N		434440ES
SPRINTER 2-t Bus 214	(901, 902)	02/95→05/06		RUN95D		ETS92ND-ETS95D1N		434440ES
SPRINTER 2-t Bus 208 CDI	(901, 902)	04/00→05/06		RUN95D		ETS92ND-ETS95D1N		434440ES
SPRINTER 2-t Bus 211 CDI	(901, 902)	04/00→05/06		RUN95D		ETS92ND-ETS95D1N		434440ES
SPRINTER 2-t Bus 213 CDI	(901, 902)	04/00→05/06		RUN95D		ETS92ND-ETS95D1N		434440ES
SPRINTER 2-t Bus 208 D	(901, 902)	02/95→04/00		RUN95D		ETS92ND-ETS95D1N		434440ES
SPRINTER 2-t Bus 216 CDI	(901, 902)	04/00→05/06		RUN95D		ETS92ND-ETS95D1N		434440ES
SPRINTER 2-t Bus 210 D	(901, 902)	03/97→04/00		RUN95D		ETS92ND-ETS95D1N		434440ES
SPRINTER 2-t Bus 212 D	(901, 902)	02/95→04/00		RUN95D		ETS92ND-ETS95D1N		434440ES
SPRINTER 2-t Box 214 NGT	(901, 902)	04/00→05/06		RUN95D		ETS92ND-ETS95D1N		434440ES
SPRINTER 2-t Box 214	(901, 902)	02/95→05/06		RUN95D		ETS92ND-ETS95D1N		434440ES
SPRINTER 2-t Box 208 CDI	(901, 902)	04/00→05/06		RUN95D		ETS92ND-ETS95D1N		434440ES
SPRINTER 2-t Box 211 CDI	(901, 902)	04/00→05/06		RUN95D		ETS92ND-ETS95D1N		434440ES
SPRINTER 2-t Box 213 CDI	(901, 902)	04/00→05/06		RUN95D		ETS92ND-ETS95D1N		434440ES
SPRINTER 2-t Box 208 D	(901, 902)	02/95→04/00		RUN95D		ETS92ND-ETS95D1N		434440ES
SPRINTER 2-t Box 208 D	(901, 902)	10/96→04/00		RUN95D		ETS92ND-ETS95D1N		434440ES
SPRINTER 2-t Box 216 CDI	(901, 902)	04/00→05/06		RUN95D		ETS92ND-ETS95D1N		434440ES
SPRINTER 2-t Box 210 D	(901, 902)	01/97→04/00		RUN95D		ETS92ND-ETS95D1N		434440ES
SPRINTER 2-t Box 212 D	(901, 902)	02/95→04/00		RUN95D		ETS92ND-ETS95D1N		434440ES
SPRINTER 2-t Flatbed / Chassis 214 NGT	(901, 902)	04/00→05/06		RUN95D		ETS92ND-ETS95D1N		434440ES
SPRINTER 2-t Flatbed / Chassis 214	(901, 902)	02/95→05/06		RUN95D		ETS92ND-ETS95D1N		434440ES
SPRINTER 2-t Flatbed / Chassis 208 CDI	(901, 902)	04/00→05/06		RUN95D		ETS92ND-ETS95D1N		434440ES
SPRINTER 2-t Flatbed / Chassis 211 CDI	(901, 902)	04/00→05/06		RUN95D		ETS92ND-ETS95D1N		434440ES
SPRINTER 2-t Flatbed / Chassis 213 CDI	(901, 902)	04/00→05/06		RUN95D		ETS92ND-ETS95D1N		434440ES
SPRINTER 2-t Flatbed / Chassis 208 D	(901, 902)	01/95→04/00		RUN95D		ETS92ND-ETS95D1N		434440ES
SPRINTER 2-t Flatbed / Chassis 208 D	(901, 902)	09/96→04/00		RUN95D		ETS92ND-ETS95D1N		434440ES
SPRINTER 2-t Flatbed / Chassis 216 CDI	(901, 902)	04/00→05/06		RUN95D		ETS92ND-ETS95D1N		434440ES
SPRINTER 2-t Flatbed / Chassis 210 D	(901, 902)	01/97→04/00		RUN95D		ETS92ND-ETS95D1N		434440ES
SPRINTER 2-t Flatbed / Chassis 212 D	(901, 902)	02/95→04/00		RUN95D		ETS92ND-ETS95D1N		434440ES
SPRINTER 3-t Bus 314 NGT	(903)	04/00→05/06		RUN95D		ETS92ND-ETS95D1N		434440ES
SPRINTER 3-t Bus 314	(903)	02/95→05/06		RUN95D		ETS92ND-ETS95D1N		434440ES
SPRINTER 3-t Bus 314 4x4	(903)	08/02→05/06		RUN95D		ETS92ND-ETS95D1N		434440ES
SPRINTER 3-t Bus 308 CDI	(903)	04/00→05/06		RUN95D		ETS92ND-ETS95D1N		434440ES
SPRINTER 3-t Bus 311 CDI	(903)	04/00→05/06		RUN95D		ETS92ND-ETS95D1N		434440ES
SPRINTER 3-t Bus 311 CDI 4x4	(903)	08/02→05/06		RUN95D		ETS92ND-ETS95D1N		434440ES
SPRINTER 3-t Bus 313 CDI	(903)	04/00→05/06		RUN95D		ETS92ND-ETS95D1N		434440ES
SPRINTER 3-t Bus 313 CDI 4x4	(903)	08/02→05/06		RUN95D		ETS92ND-ETS95D1N		434440ES
SPRINTER 3-t Bus 308 D	(903)	02/95→04/00		RUN95D		ETS92ND-ETS95D1N		434440ES
SPRINTER 3-t Bus 316 CDI	(903)	04/00→05/06		RUN95D		ETS92ND-ETS95D1N		434440ES
SPRINTER 3-t Bus 2.3 D 4x4	(903)	06/97→12/99		RUN72D	MAG74D	ETS74ND	ETS70D1N-ETS74DI	476420ES
SPRINTER 3-t Bus 316 CDI 4x4	(903)	08/02→05/06		RUN95D		ETS92ND-ETS95D1N		434440ES
SPRINTER 3-t Bus 310 D 4x4	(903)	05/97→08/02		RUN95D		ETS92ND-ETS95D1N		434440ES
SPRINTER 3-t Bus 312 D 2.9	(903)	02/95→04/00		RUN95D		ETS92ND-ETS95D1N		434440ES
SPRINTER 3-t Bus 2.9 TDi	(903)	01/97→12/99		RUN72D	MAG74D	ETS74ND	ETS70D1N-ETS74DI	476420ES
SPRINTER 3-t Bus 312 D 2.9 4x4	(903)	05/97→08/02		RUN95D		ETS92ND-ETS95D1N		434440ES
SPRINTER 3-t Bus 308 E	(903)	04/00→05/06		RUN95D		ETS92ND-ETS95D1N		434440ES

	Design		START	RUN	MAGIS	ETS	ETS alternative	ES
MERCEDES								
SPRINTER 3-t Box 314 NGT	(903)	04/00→05/06		RUN95D		ETS92ND-ETS95D1N		434440ES
SPRINTER 3-t Box 314	(903)	02/95→05/06		RUN95D		ETS92ND-ETS95D1N		434440ES
SPRINTER 3-t Box 314 4x4	(903)	08/02→05/06		RUN95D		ETS92ND-ETS95D1N		434440ES
SPRINTER 3-t Box 308 CDI	(903)	04/00→05/06		RUN95D		ETS92ND-ETS95D1N		434440ES
SPRINTER 3-t Box 311 CDI	(903)	04/00→05/06		RUN95D		ETS92ND-ETS95D1N		434440ES
SPRINTER 3-t Box 311 CDI 4x4	(903)	08/02→05/06		RUN95D		ETS92ND-ETS95D1N		434440ES
SPRINTER 3-t Box 313 CDI	(903)	04/00→05/06		RUN95D		ETS92ND-ETS95D1N		434440ES
SPRINTER 3-t Box 313 CDI 4x4	(903)	08/02→05/06		RUN95D		ETS92ND-ETS95D1N		434440ES
SPRINTER 3-t Box 308 D 2.3	(903)	02/95→04/00		RUN95D		ETS92ND-ETS95D1N		434440ES
SPRINTER 3-t Box 2.3 D 4x4	(903)	06/97→12/99		RUN72D	MAG74D	ETS74ND	ETS70D1N-ETS74DI	476420ES
SPRINTER 3-t Box 308 D 2.3	(903)	02/95→04/00		RUN95D		ETS92ND-ETS95D1N		434440ES
SPRINTER 3-t Box 316 CDI	(903)	04/00→05/06		RUN95D		ETS92ND-ETS95D1N		434440ES
SPRINTER 3-t Box 316 CDI 4x4	(903)	08/02→05/06		RUN95D		ETS92ND-ETS95D1N		434440ES
SPRINTER 3-t Box 310 D 2.9	(903)	02/95→04/00		RUN95D		ETS92ND-ETS95D1N		434440ES
SPRINTER 3-t Box 312 D 2.9	(903)	02/95→04/00		RUN95D		ETS92ND-ETS95D1N		434440ES
SPRINTER 3-t Box 312 D 2.9 4x4	(903)	05/97→08/02		RUN95D		ETS92ND-ETS95D1N		434440ES
SPRINTER 3-t Flatbed / Chassis 314 NGT	(903)	04/00→05/06		RUN95D		ETS92ND-ETS95D1N		434440ES
SPRINTER 3-t Flatbed / Chassis 314	(903)	02/95→05/06		RUN95D		ETS92ND-ETS95D1N		434440ES
SPRINTER 3-t Flatbed / Chassis 314 4x4	(903)	08/02→05/06		RUN95D		ETS92ND-ETS95D1N		434440ES
SPRINTER 3-t Flatbed / Chassis 308 CDI	(903)	04/00→05/06		RUN95D		ETS92ND-ETS95D1N		434440ES
SPRINTER 3-t Flatbed / Chassis 210 CDI	(903)	03/09→		RUN72D	MAG74D	ETS74ND	ETS70D1N-ETS74DI	476420ES
SPRINTER 3-t Flatbed / Chassis 311 CDI	(903)	04/00→05/06		RUN95D		ETS92ND-ETS95D1N		434440ES
SPRINTER 3-t Flatbed / Chassis 311 CDI 4x4	(903)	08/02→05/06		RUN95D		ETS92ND-ETS95D1N		434440ES
SPRINTER 3-t Flatbed / Chassis 313 CDI	(903)	04/00→05/06		RUN95D		ETS92ND-ETS95D1N		434440ES
SPRINTER 3-t Flatbed / Chassis 313 CDI 4x4	(903)	08/02→05/06		RUN95D		ETS92ND-ETS95D1N		434440ES
SPRINTER 3-t Flatbed / Chassis 308 D 2.3	(903)	02/95→04/00		RUN95D		ETS92ND-ETS95D1N		434440ES
SPRINTER 3-t Flatbed / Chassis 308 D 2.3	(903)	11/96→04/00		RUN95D		ETS92ND-ETS95D1N		434440ES
SPRINTER 3-t Flatbed / Chassis 316 CDI	(903)	04/00→05/06		RUN95D		ETS92ND-ETS95D1N		434440ES
SPRINTER 3-t Flatbed / Chassis 316 CDI 4x4	(903)	08/02→05/06		RUN95D		ETS92ND-ETS95D1N		434440ES
SPRINTER 3-t Flatbed / Chassis 310 D 2.9	(903)	01/97→04/00		RUN95D		ETS92ND-ETS95D1N		434440ES
SPRINTER 3-t Flatbed / Chassis 312 D 2.9	(903)	02/95→04/00		RUN95D		ETS92ND-ETS95D1N		434440ES
SPRINTER 4-t Bus 414	(904)	02/96→05/06		RUN95D		ETS92ND-ETS95D1N		434440ES
SPRINTER 4-t Bus 408 CDI	(904)	04/00→05/06		RUN95D		ETS92ND-ETS95D1N		434440ES
SPRINTER 4-t Bus 411 CDI	(904)	04/00→05/06		RUN95D		ETS92ND-ETS95D1N		434440ES
SPRINTER 4-t Bus 413 CDI	(904)	04/00→05/06		RUN95D		ETS92ND-ETS95D1N		434440ES
SPRINTER 4-t Bus 416 CDI	(904)	04/00→05/06		RUN95D		ETS92ND-ETS95D1N		434440ES
SPRINTER 4-t Box 414	(904)	02/96→05/06		RUN95D		ETS92ND-ETS95D1N		434440ES
SPRINTER 4-t Box 414 4x4	(904)	05/97→05/06		RUN95D		ETS92ND-ETS95D1N		434440ES
SPRINTER 4-t Box 408 CDI	(904)	04/00→05/06		RUN95D		ETS92ND-ETS95D1N		434440ES
SPRINTER 4-t Box 411 CDI	(904)	04/00→05/06		RUN95D		ETS92ND-ETS95D1N		434440ES

	Design		START	RUN	MAGIS	ETS	ETS alternative	ES
MERCEDES								
SPRINTER 4-t Box 411 CDI 4x4	(904)	04/00→05/06		RUN95D		ETS92ND-ETS95D1N		434440ES
SPRINTER 4-t Box 413 CDI	(904)	04/00→05/06		RUN95D		ETS92ND-ETS95D1N		434440ES
SPRINTER 4-t Box 413 CDI 4x4	(904)	04/00→05/06		RUN95D		ETS92ND-ETS95D1N		434440ES
SPRINTER 4-t Box 408 D	(904)	02/96→05/06		RUN95D		ETS92ND-ETS95D1N		434440ES
SPRINTER 4-t Box 2.3 D 4x4	(904)	06/97→12/99		RUN72D	MAG74D	ETS74ND	ETS70D1N-ETS74DI	476420ES
SPRINTER 4-t Box 416 CDI	(904)	04/00→05/06		RUN95D		ETS92ND-ETS95D1N		434440ES
SPRINTER 4-t Box 416 CDI 4x4	(904)	04/00→05/06		RUN95D		ETS92ND-ETS95D1N		434440ES
SPRINTER 4-t Box 410 D	(904)	02/96→05/06		RUN95D		ETS92ND-ETS95D1N		434440ES
SPRINTER 4-t Box 410 D 4x4	(904)	05/97→05/06		RUN95D		ETS92ND-ETS95D1N		434440ES
SPRINTER 4-t Box 412 D	(904)	02/96→05/06		RUN95D		ETS92ND-ETS95D1N		434440ES
SPRINTER 4-t Box 412 D 4x4	(904)	05/97→05/06		RUN95D		ETS92ND-ETS95D1N		434440ES
SPRINTER 4-t Box 412 D	(904)	02/96→05/06		RUN95D		ETS92ND-ETS95D1N		434440ES
SPRINTER 4-t Box 412 D 4x4	(904)	05/97→05/06		RUN95D		ETS92ND-ETS95D1N		434440ES
SPRINTER 4-t Flatbed / Chassis 414	(904)	02/96→05/06		RUN95D		ETS92ND-ETS95D1N		434440ES
SPRINTER 4-t Flatbed / Chassis 414 4x4	(904)	05/97→05/06		RUN95D		ETS92ND-ETS95D1N		434440ES
SPRINTER 4-t Flatbed / Chassis 408 CDI	(904)	04/00→05/06		RUN95D		ETS92ND-ETS95D1N		434440ES
SPRINTER 4-t Flatbed / Chassis 411 CDI	(904)	04/00→05/06		RUN95D		ETS92ND-ETS95D1N		434440ES
SPRINTER 4-t Flatbed / Chassis 411 CDI 4x4	(904)	04/00→05/06		RUN95D		ETS92ND-ETS95D1N		434440ES
SPRINTER 4-t Flatbed / Chassis 413 CDI	(904)	04/00→05/06		RUN95D		ETS92ND-ETS95D1N		434440ES
SPRINTER 4-t Flatbed / Chassis 413 CDI 4x4	(904)	04/00→05/06		RUN95D		ETS92ND-ETS95D1N		434440ES
SPRINTER 4-t Flatbed / Chassis 408 D	(904)	02/96→05/06		RUN95D		ETS92ND-ETS95D1N		434440ES
SPRINTER 4-t Flatbed / Chassis 2.3 D 4x4	(904)	06/97→12/99		RUN72D	MAG74D	ETS74ND	ETS70D1N-ETS74DI	476420ES
SPRINTER 4-t Flatbed / Chassis 416 CDI	(904)	04/00→05/06		RUN95D		ETS92ND-ETS95D1N		434440ES
SPRINTER 4-t Flatbed / Chassis 416 CDI 4x4	(904)	04/00→05/06		RUN95D		ETS92ND-ETS95D1N		434440ES
SPRINTER 4-t Flatbed / Chassis 410 D	(904)	02/96→05/06		RUN95D		ETS92ND-ETS95D1N		434440ES
SPRINTER 4-t Flatbed / Chassis 410 D 4x4	(904)	05/97→05/06		RUN95D		ETS92ND-ETS95D1N		434440ES
SPRINTER 4-t Flatbed / Chassis 412 D	(904)	02/96→05/06		RUN95D		ETS92ND-ETS95D1N		434440ES
SPRINTER 4-t Flatbed / Chassis 412 D 4x4	(904)	05/97→05/06		RUN95D		ETS92ND-ETS95D1N		434440ES
SPRINTER 4-t Flatbed / Chassis 412 D	(904)	02/96→05/06		RUN95D		ETS92ND-ETS95D1N		434440ES
SPRINTER 4-t Flatbed / Chassis 412 D 4x4	(904)	05/97→05/06		RUN95D		ETS92ND-ETS95D1N		434440ES
SPRINTER 3-t Bus 216	(906)	09/08→		RUN95D		ETS92ND-ETS95D1N		434440ES
SPRINTER 3-t Bus 224	(906)	06/06→	AGM70D	RUN95D		ETS92ND-ETS95D1N		434440ES
SPRINTER 3-t Bus 210 CDI	Stop/Start , H	03/09→	AGM70D	RUN95D		ETS92ND-ETS95D1N		434440ES
SPRINTER 3-t Bus 213CDI	Stop/Start , H	03/09→	AGM70D					
SPRINTER 3-t Bus 211 CDI	(906)	06/06→	AGM70D	RUN95D		ETS92ND-ETS95D1N		434440ES
SPRINTER 3-t Bus 215 CDI	(906)	06/06→	AGM70D	RUN95D		ETS92ND-ETS95D1N		434440ES
SPRINTER 3-t Box 216 (906.613)	(906)	09/08→		RUN95D		ETS92ND-ETS95D1N		434440ES
SPRINTER 3-t Box 224	(906)	06/06→		RUN95D		ETS92ND-ETS95D1N		434440ES
SPRINTER 3-t Box 209 CDI	(906)	06/06→		RUN95D		ETS92ND-ETS95D1N		434440ES
SPRINTER 3-t Box 210 CDI	(906)	03/09→		RUN95D		ETS92ND-ETS95D1N		434440ES

	Design		START	RUN	MAGIS	ETS	ETS alternative	ES
MERCEDES								
SPRINTER 3-t Box 211 CDI	(906)	06/06→		RUN95D		ETS92ND-ETS95D1N		434440ES
SPRINTER 3-t Box 213 CDI	(906)	06/06→		RUN95D		ETS92ND-ETS95D1N		434440ES
SPRINTER 3-t Box 215 CDI	(906)	06/06→		RUN95D		ETS92ND-ETS95D1N		434440ES
SPRINTER 3-t Box 216 CDI	(906)	03/09→		RUN95D		ETS92ND-ETS95D1N		434440ES
SPRINTER 3-t Box 218 CDI	(906)	06/06→	AGM70D	RUN95D		ETS92ND-ETS95D1N		434440ES
SPRINTER 3-t Box 219 CDI (906.611, 906.613)	(906)	03/09→		RUN95D		ETS92ND-ETS95D1N		434440ES
SPRINTER 3-t Flatbed / Chassis 216 (906.113, 906.213)	(906)	09/08→		RUN95D		ETS92ND-ETS95D1N		434440ES
SPRINTER 3-t Flatbed / Chassis 224	(906)	06/06→		RUN95D		ETS92ND-ETS95D1N		434440ES
SPRINTER 3-t Flatbed / Chassis 209 CDI	(906)	06/06→		RUN95D		ETS92ND-ETS95D1N		434440ES
SPRINTER 3-t Flatbed / Chassis 210 CDI	(906)	03/09→		RUN95D		ETS92ND-ETS95D1N		434440ES
SPRINTER 3-t Flatbed / Chassis 211 CDI	(906)	06/06→		RUN95D		ETS92ND-ETS95D1N		434440ES
SPRINTER 3-t Flatbed / Chassis 213 CDI	(906)	03/09→		RUN95D		ETS92ND-ETS95D1N		434440ES
SPRINTER 3-t Flatbed / Chassis 213 CDI	(906)	06/06→		RUN95D		ETS92ND-ETS95D1N		434440ES
SPRINTER 3-t Flatbed / Chassis 215 CDI	(906)	06/06→		RUN95D		ETS92ND-ETS95D1N		434440ES
SPRINTER 3-t Flatbed / Chassis 216 CDI	(906)	03/09→		RUN95D		ETS92ND-ETS95D1N		434440ES
SPRINTER 3-t Flatbed / Chassis 218 CDI	(906)	06/06→		RUN95D		ETS92ND-ETS95D1N		434440ES
SPRINTER 3-t Flatbed / Chassis 219 CDI	(906)	03/09→		RUN95D		ETS92ND-ETS95D1N		434440ES
SPRINTER 3,5-t Bus 316	(906)	09/08→		RUN95D				
SPRINTER 3,5-t Bus 316 NGT (906.633, 906.635)	(906)	09/08→		RUN95D				
SPRINTER 3,5-t Bus 324	(906)	06/06→	AGM90D	RUN95D		ETS92ND-ETS95D1N		434440ES
SPRINTER 3,5-t Bus 310 CDI	Stop/Start , H	03/09→	AGM90D	RUN95D		ETS92ND-ETS95D1N		434440ES
SPRINTER 3,5-t Bus 311 CDI	(906)	06/06→	AGM90D	RUN95D		ETS92ND-ETS95D1N		434440ES
SPRINTER 3,5-t Bus 311 CDI 4x4 (906.733, 906.735)	(906)	02/08→		RUN95D				
SPRINTER 3,5-t Bus 315 CDI	(906)	06/06→		RUN95D		ETS92ND-ETS95D1N		434440ES
SPRINTER 3,5-t Bus 315 CDI 4x4 (906.733, 906.735)	(906)	02/08→		RUN95D				
SPRINTER 3,5-t Bus 318 CDI 4x4 (906.731, 906.733, 906.735)	(906)	02/08→		RUN95D				
SPRINTER 3,5-t Box 316 (906.633, 906.365, 906.637)	(906)	09/08→		RUN95D				
SPRINTER 3,5-t Box 316 NGT (906.633, 906.635)	(906)	09/08→		RUN95D				
SPRINTER 3,5-t Box 324	(906)	06/06→		RUN95D		ETS92ND-ETS95D1N		434440ES
SPRINTER 3,5-t Box 309 CDI	(906)	06/06→		RUN95D		ETS92ND-ETS95D1N		434440ES
SPRINTER 3,5-t Box 310 CDI	(906)	03/09→		RUN95D		ETS92ND-ETS95D1N		434440ES
SPRINTER 3,5-t Box 311 CDI	(906)	06/06→		RUN95D		ETS92ND-ETS95D1N		434440ES
SPRINTER 3,5-t Box 311 CDI 4x4 (906.633, 906.635, 906.637)	(906)	02/08→		RUN95D				
SPRINTER 3,5-t Box 313 CDI	(906)	06/06→		RUN95D		ETS92ND-ETS95D1N		434440ES
SPRINTER 3,5-t Box 313 CDI	Stop/Start , H	03/09→	AGM90D					
SPRINTER 3,5-t Box 315 CDI	(906)	06/06→		RUN95D		ETS92ND-ETS95D1N		434440ES
SPRINTER 3,5-t Box 315 CDI 4x4 (906.633, 906.635, 906.637)	(906)	02/08→		RUN95D				

	Design		START	RUN	MAGIS	ETS	ETS alternative	ES
MERCEDES								
SPRINTER 3,5-t Box 316 CDI (906.631, 906.633, 906.635, 906.637)	(906)	03/09→		RUN95D				
SPRINTER 3,5-t Box 316 CDI 4x4 (906.631, 906.633, 906.635, 906.637)	(906)	03/09→		RUN95D				
SPRINTER 3,5-t Box 318 CDI	(906)	06/06→		RUN95D		ETS92ND-ETS95D1N		434440ES
SPRINTER 3,5-t Box 318 CDI 4x4 (906.633, 906.635, 906.637)	(906)	02/08→		RUN95D				
SPRINTER 3,5-t Box 319 CDI (906.631, 906.633, 906.635, 906.637)	(906)	03/09→		RUN95D				
SPRINTER 3,5 Flatbed / Chassis 316 (906.133, 906.135, 906.233, 906.235)	(906)	09/08→		RUN95D				
SPRINTER 3,5 Flatbed / Chassis 316 NGT (906.133, 906.135)	(906)	09/08→		RUN95D				
SPRINTER 3,5 Flatbed / Chassis 324	(906)	06/06→		RUN95D		ETS92ND-ETS95D1N		434440ES
SPRINTER 3,5 Flatbed / Chassis 309 CDI	(906)	06/06→		RUN95D		ETS92ND-ETS95D1N		434440ES
SPRINTER 3,5 Flatbed / Chassis 310 CDI	(906)	03/09→		RUN95D		ETS92ND-ETS95D1N		434440ES
SPRINTER 3,5 Flatbed / Chassis 311 CDI	(906)	06/06→		RUN95D		ETS92ND-ETS95D1N		434440ES
SPRINTER 3,5 Flatbed / Chassis 311 CDI 4x4 (906.133, 906.135, 906.233, 906.235)	(906)	02/08→		RUN95D				
SPRINTER 3,5 Flatbed / Chassis 313 CDI	(906)	06/06→		RUN95D		ETS92ND-ETS95D1N		434440ES
SPRINTER 3,5 Flatbed / Chassis 315 CDI	(906)	06/06→		RUN95D		ETS92ND-ETS95D1N		434440ES
SPRINTER 3,5 Flatbed / Chassis 315 CDI 4x4 (906.133, 906.135, 906.233, 906.235)	(906)	02/08→		RUN95D				
SPRINTER 3,5 Flatbed / Chassis 316 CDI (906.131, 906.133, 906.135, 906.231, 906.233, 906.23	(906)	03/09→		RUN95D				
SPRINTER 3,5 Flatbed / Chassis 316 CDI 4x4 (906.131, 906.133, 906.231, 906.233)	(906)	03/09→		RUN95D				
SPRINTER 3,5 Flatbed / Chassis 318 CDI	(906)	06/06→		RUN95D		ETS92ND-ETS95D1N		434440ES
SPRINTER 3,5 Flatbed / Chassis 318 CDI 4x4 (906.133, 906.135, 906.233, 906.235)	(906)	02/08→		RUN95D				
SPRINTER 3,5 Flatbed / Chassis 319 CDI (906.131, 906.133, 906.135, 906.231, 906.233, 906.23	(906)	03/09→		RUN95D				
SPRINTER 4,6-t Box 416 CDI	(906)	03/09→		RUN95D				
SPRINTER 4,6-t Box 419 CDI	(906)	03/09→		RUN95D				
SPRINTER 4,6-t Flatbed / Chassis 416 CDI	(906)	03/09→		RUN95D				
SPRINTER 4,6-t Flatbed / Chassis 419 CDI	(906)	03/09→		RUN95D				
SPRINTER 5-t Box 509 CDI	(906)	06/06→		RUN95D		ETS92ND-ETS95D1N		434440ES
SPRINTER 5-t Box 510 CDI	(906)	03/09→		RUN95D				
SPRINTER 5-t Box 511 CDI	(906)	06/06→		RUN95D		ETS92ND-ETS95D1N		434440ES

	Design		START	RUN	MAGIS	ETS	ETS alternative	ES
MERCEDES								
SPRINTER 5-t Box 515 CDI	(906)	06/06→		RUN95D		ETS92ND-ETS95D1N		434440ES
SPRINTER 5-t Box 516 CDI	(906)	03/09→		RUN95D				
SPRINTER 5-t Box 518 CDI	(906)	06/06→		RUN95D		ETS92ND-ETS95D1N		434440ES
SPRINTER 5-t Box 519 CDI	(906)	03/09→		RUN95D				
SPRINTER 5-t Flatbed / Chassis 516 (906.153, 906.155, 906.253, 906.255)	(906)	09/08→		RUN95D				
SPRINTER 5-t Flatbed / Chassis 516 NGT (906.153, 906.155)	(906)	09/08→		RUN95D				
SPRINTER 5-t Flatbed / Chassis 509 CDI	(906)	06/06→		RUN95D		ETS92ND-ETS95D1N		434440ES
SPRINTER 5-t Flatbed / Chassis 510 CDI	(906)	03/09→		RUN95D				
SPRINTER 5-t Flatbed / Chassis 511 CDI	(906)	06/06→		RUN95D		ETS92ND-ETS95D1N		434440ES
SPRINTER 5-t Flatbed / Chassis 515 CDI	(906)	06/06→		RUN95D		ETS92ND-ETS95D1N		434440ES
SPRINTER 5-t Flatbed / Chassis 516 CDI	(906)	03/09→		RUN95D				
SPRINTER 5-t Flatbed / Chassis 518 CDI	(906)	06/06→		RUN95D		ETS92ND-ETS95D1N		434440ES
SPRINTER 5-t Flatbed / Chassis 519 CDI	(906)	03/09→		RUN95D				
MORRIS GARAGES								
MG EXPRESS 1.4		03/03→05/05			MAG44DB	ETS44NDB		ES45NDB
MG EXPRESS 1.8		03/03→05/05			MAG62DB	ETS60NDB-ETS50NDB		ES60NDB
MG EXPRESS 2.0 D		03/03→05/05			MAG62DB	ETS60NDB-ETS50NDB		ES60NDB
MGF 1.6	(RD)	02/00→03/02			MAG62DB	ETS60NDB-ETS50NDB		ES60NDB
MGF 1.8 i 16V	(RD)	03/95→03/02			MAG62DB	ETS60NDB-ETS50NDB		ES60NDB
MGF 1.8 i VVC	(RD)	03/95→03/02			MAG62DB	ETS60NDB-ETS50NDB		ES60NDB
MGF 1,8 i VVC	(RD)	10/01→03/02			MAG62DB	ETS60NDB-ETS50NDB		ES60NDB
TF 115		03/02→		RUN62D	MAG62D	ETS62ND	ETS60D3N	438320ES
TF 120		03/02→		RUN62D	MAG62D	ETS62ND	ETS60D3N	438320ES
TF 135		03/02→		RUN62D	MAG62D	ETS62ND	ETS60D3N	438320ES
TF 160		03/02→		RUN62D	MAG62D	ETS62ND	ETS60D3N	438320ES
ZR 105		06/01→			MAG62DB	ETS60NDB-ETS50NDB		ES60NDB
ZR 120		06/01→			MAG62DB	ETS60NDB-ETS50NDB		ES60NDB
ZR 160		06/01→			MAG62DB	ETS60NDB-ETS50NDB		ES60NDB
ZR Turbodiesel		06/01→			MAG72DB	ETS71NDB		
ZR 2.0 TD		12/02→12/05			MAG72DB	ETS71NDB		
ZS 1.6		07/03→12/05			MAG62DB	ETS60NDB-ETS50NDB		ES60NDB
ZS 120		07/01→			MAG62DB	ETS60NDB-ETS50NDB		ES60NDB
ZS 180		07/01→		RUN62D	MAG62D	ETS62ND	ETS60D3N	438320ES
ZS 2.0 TD		01/04→			MAG72DB	ETS71NDB		
ZS 2.0 TD		01/04→			MAG72DB	ETS71NDB		
ZS Hatchback 1.6		11/01→10/05			MAG62DB	ETS60NDB-ETS50NDB		ES60NDB
ZS Hatchback 120		07/01→		RUN62D	MAG62D	ETS62ND	ETS60D3N	438320ES
ZS Hatchback 180		07/01→		RUN62D	MAG62D	ETS62ND	ETS60D3N	438320ES
ZS Hatchback 2.0 TD		01/04→			MAG72DB	ETS71NDB		
ZS Hatchback 2.0 TD		01/04→			MAG72DB	ETS71NDB		
ZT 1.8 16V		01/03→			MAG62DB	ETS60NDB-ETS50NDB		ES60NDB
ZT 1.8 T 16V		01/03→			MAG62DB	ETS60NDB-ETS50NDB		ES60NDB
ZT 160		06/01→			MAG62DB	ETS60NDB-ETS50NDB		ES60NDB
ZT 180		01/03→			MAG62DB	ETS60NDB-ETS50NDB		ES60NDB

	Design		START	RUN	MAGIS	ETS	ETS alternative	ES
MORRIS GARAGES								
ZT 190		06/01→			MAG62DB	ETS60NDB-ETS50NDB		ES60NDB
ZT 260		10/03→			MAG62DB	ETS60NDB-ETS50NDB		ES60NDB
ZT 2.0 CDTi		06/02→09/03			MAG62DB	ETS60NDB-ETS50NDB		ES60NDB
ZT 2.0 CDTi		11/02→			MAG62DB	ETS60NDB-ETS50NDB		ES60NDB
ZT- T 1.8 16V		01/03→			MAG62DB	ETS60NDB-ETS50NDB		ES60NDB
ZT- T 1.8 T 16V		01/03→			MAG62DB	ETS60NDB-ETS50NDB		ES60NDB
ZT- T 160		10/01→			MAG62DB	ETS60NDB	ETS60D4N	ES60NDB
ZT- T 180		01/03→			MAG62DB	ETS60NDB	ETS60D4N	ES60NDB
ZT- T 190		10/01→			MAG62DB	ETS60NDB	ETS60D4N	ES60NDB
ZT- T 260		10/03→			MAG62DB	ETS60NDB	ETS60D4N	ES60NDB
ZT- T 2.0 CDTi		06/02→09/03			MAG62DB	ETS60NDB-ETS50NDB		ES60NDB
ZT- T 2.0 CDTi		11/02→			MAG62DB	ETS60NDB-ETS50NDB		ES60NDB
X-POWER 4.6 SV		01/03→			MAG72DB	ETS71NDB		
X-POWER 5.0 SV-R		01/05→			MAG72DB	ETS71NDB		
MINI								
1.4	(R50, R53)	04/03→10/06			MAG62DB	ETS60NDB-ETS50NDB		ES60NDB
One	(R50, R53)	06/01→		RUN62D	MAG62D	ETS62ND	ETS60D3N	438320ES
One	Stop/Start , RB , B	03/09→	AGM70D					
Cooper	(R50, R53)	06/01→		RUN62D	MAG62D	ETS62ND	ETS60D3N	438320ES
Cooper S	(R50, R53)	03/02→			MAG62DB	ETS60NDB-ETS50NDB		ES60NDB
Cooper S	(R50, R53)	07/04→			MAG62DB	ETS60NDB-ETS50NDB		ES60NDB
1.6 S Works	(R50, R53)	11/03→06/05			MAG62DB	ETS60NDB-ETS50NDB		ES60NDB
Works	(R50, R53)	11/03→			MAG62DB	ETS60NDB-ETS50NDB		ES60NDB
One D	(R50, R53)	06/03→		RUN72D	MAG74D	ETS74ND	ETS70D1N-ETS74DI	476420ES
One D	(R50, R53)	06/03→		RUN72D	MAG74D	ETS74ND	ETS70D1N-ETS74DI	476420ES
Convertible One	(R52)	07/04→		RUN62D	MAG62D	ETS62ND	ETS60D3N	438320ES
Convertible Cooper	(R52)	07/04→		RUN62D	MAG62D	ETS62ND	ETS60D3N	438320ES
Convertible Cooper S	(R52)	07/04→			MAG62DB	ETS60NDB-ETS50NDB		ES60NDB
Convertible John Cooper Works	(R52)	07/04→			MAG62DB	ETS60NDB-ETS50NDB		ES60NDB
Convertible John Cooper Works	Stop/Start , RB , B	03/08→	AGM70D					
Cooper	Stop/Start , RB , B	10/06→	AGM70D	RUN62D	MAG62D	ETS62ND	ETS60D3N	438320ES
Cooper S	Stop/Start , RB , B	10/06→	AGM70D	RUN72D	MAG74D	ETS74ND	ETS70D1N-ETS74DI	476420ES
Cooper D	Stop/Start , RB , B	03/07→	AGM70D					
CLUBMAN Cooper, Cooper S	Stop/Start , RB , B	10/07→	AGM70D					
CLUBMAN John Cooper,Works	Stop/Start , RB , B	03/08→	AGM70D					
CLUBMAN Cooper D	Stop/Start , RB , B	10/07→	AGM70D					
Convertible Cooper, Cooper S	Stop/Start , RB , B	03/09→	AGM70D					
Convertible John Cooper Works	Stop/Start , RB , B	03/08→	AGM70D					
MITSUBISHI								
CARISMA 1.6	(DA_)	07/95→06/06		RUN62D	MAG62D	ETS62ND	ETS60D3N	438320ES
CARISMA 1.6	(DA_)	12/98→06/06		RUN62D	MAG62D	ETS62ND	ETS60D3N	438320ES
CARISMA 1.6	(DA_)	05/97→06/06		RUN62D	MAG62D	ETS62ND	ETS60D3N	438320ES
CARISMA 1.6	(DA_)	09/00→06/06		RUN62D	MAG62D	ETS62ND	ETS60D3N	438320ES
CARISMA 1.8	(DA_)	07/95→06/06		RUN62D	MAG62D	ETS62ND	ETS60D3N	438320ES
CARISMA 1.8 GDI	(DA_)	10/00→06/06		RUN62D	MAG62D	ETS62ND	ETS60D3N	438320ES

	Design		START	RUN	MAGIS	ETS	ETS alternative	ES
MITSUBISHI								
CARISMA 1.8 16V GDI	(DA_)	09/97→06/06		RUN62D	MAG62D	ETS62ND	ETS60D3N	438320ES
CARISMA 1.8 16V	(DA_)	07/95→06/06		RUN62D	MAG62D	ETS62ND	ETS60D3N	438320ES
CARISMA 1.9 DI-D	(DA_)	09/00→06/06		RUN72D	MAG74D	ETS74ND	ETS70D1N-ETS74DI	476420ES
CARISMA 1.9 DI-D	(DA_)	09/00→06/06		RUN72D	MAG74D	ETS74ND	ETS70D1N-ETS74DI	476420ES
CARISMA Saloon 1.3	(DA_)	09/00→10/04		RUN50D	MAG50D	ETS50ND	ETS50D3N-ETS50D4N	
CARISMA Saloon 1.6	(DA_)	09/96→06/06		RUN62D	MAG62D	ETS62ND	ETS60D3N	438320ES
CARISMA Saloon 1.6	(DA_)	12/98→06/06		RUN62D	MAG62D	ETS62ND	ETS60D3N	438320ES
CARISMA Saloon 1.6	(DA_)	05/97→06/06		RUN62D	MAG62D	ETS62ND	ETS60D3N	438320ES
CARISMA Saloon 1.6	(DA_)	09/00→06/06		RUN62D	MAG62D	ETS62ND	ETS60D3N	438320ES
CARISMA Saloon 1.8	(DA_)	09/96→06/06		RUN62D	MAG62D	ETS62ND	ETS60D3N	438320ES
CARISMA Saloon 1.8 GDI	(DA_)	10/00→06/06		RUN62D	MAG62D	ETS62ND	ETS60D3N	438320ES
CARISMA Saloon 1.8 16V GDI	(DA_)	09/97→06/06		RUN62D	MAG62D	ETS62ND	ETS60D3N	438320ES
CARISMA Saloon 2.0 16V GT EVO VI/VII	(DA_)	11/99→06/06		RUN72D	MAG74D	ETS74ND	ETS70D1N-ETS74DI	476420ES
CARISMA Saloon 1.9 DI-D	(DA_)	09/00→06/06		RUN72D	MAG74D	ETS74ND	ETS70D1N-ETS74DI	476420ES
CARISMA Saloon 1.9 DI-D	(DA_)	09/00→06/06		RUN72D	MAG74D	ETS74ND	ETS70D1N-ETS74DI	476420ES
COLT IV 1.3 GLi 12V (CA1A)	(CA_A)	04/92→04/96						ES45300SJ
COLT V 1300 GL,GLX (CJ1A)	(CJ_A)	05/96→09/00						ES45300SJ
COLT V 1300	(CJ_A)	09/00→07/05						ES45300SJ
COLT VI 1.1		10/04→		RUN50D	MAG50D	ETS50ND	ETS50D3N-ETS50D4N	
COLT VI 1.3		06/04→		RUN50D	MAG50D	ETS50ND	ETS50D3N-ETS50D4N	
COLT VI 1.5		06/04→		RUN50D	MAG50D	ETS50ND	ETS50D3N-ETS50D4N	
COLT VI 1.5 CZT		03/05→		RUN62D	MAG62D	ETS62ND	ETS60D3N	438320ES
COLT VI 1.5 DI-D		08/04→		RUN62D	MAG62D	ETS62ND	ETS60D3N	438320ES
COLT VI 1.5 DI-D		08/04→		RUN62D	MAG62D	ETS62ND	ETS60D3N	438320ES
COLT CZC Convertible 1.5	(RG)	05/06→		RUN62D	MAG62D	ETS62ND	ETS60D3N	438320ES
COLT CZC Convertible 1.5 Turbo	(RG)	05/06→		RUN62D	MAG62D	ETS62ND	ETS60D3N	438320ES
GALANT 2.5 TD I		03-93→08-96						ES100720S
GRANDIS 2.0 DI-D		09-05→			MAG100D	ETS100ND-ETS100KD	ETS100D2N-ETSD1N	
L 200 D, 2.5 D, 300 D		06-96→						ES100720S
LANCER 2.0 D		01-94→10-03						ES100720S
LANCER Saloon 1.3	(CS_A)	09/03→		RUN62D	MAG62D	ETS62ND	ETS60D3N	438320ES
LANCER Saloon 1.6	(CS_A)	09/03→		RUN62D	MAG62D	ETS62ND	ETS60D3N	438320ES
LANCER Estate 1.6	(CS_W)	09/03→		RUN62D	MAG62D	ETS62ND	ETS60D3N	438320ES
LANCER Saloon 1.5	(CX_A)	06/08→		RUN62D	MAG62D	ETS62ND	ETS60D3N	438320ES
LANCER Saloon 1.8	(CX_A)	02/08→		RUN62D	MAG62D	ETS62ND	ETS60D3N	438320ES
LANCER Saloon 2.0 EVO (CZ4A)	(CX_A)	06/08→		RUN72D	MAG74D	ETS74ND	ETS70D1N-ETS74DI	476420ES
LANCER Saloon 2.0 DI-D	(CX_A)	01/08→		RUN72D	MAG74D	ETS74ND	ETS70D1N-ETS74DI	476420ES
LANCER SPORTBACK 1.5	(CY/Z_A)	06/08→		RUN62D	MAG62D	ETS62ND	ETS60D3N	438320ES
LANCER SPORTBACK 1.8	(CY/Z_A)	06/08→		RUN62D	MAG62D	ETS62ND	ETS60D3N	438320ES
LANCER SPORTBACK 2.0 DI-D	(CY/Z_A)	06/08→		RUN72D	MAG74D	ETS74ND	ETS70D1N-ETS74DI	476420ES
OUTLANDER 2.4 Mivec		09-07→			MAG100D	ETS100ND-ETS100KD	ETS100D2N-ETSD1N	
PAJERO 2.6 D, 3.2 D		04-00→			MAG100D	ETS100ND-ETS100KD	ETS100D2N-ETSD1N	
PAJERO 2000 2.5 TDI		04-00→			MAG100D	ETS100ND-ETS100KD	ETS100D2N-ETSD1N	
PAJERO 2000 3.2 TDI		04-00→			MAG100D	ETS100ND-ETS100KD	ETS100D2N-ETSD1N	
PAJERO 3.5		04-00→			MAG100D	ETS100ND-ETS100KD	ETS100D2N-ETSD1N	
PAJERO 2000 3.5I GDI V6 24V		04-00→						ES100720S
PAJERO 2.5 TDI		01-90→04-00						ES100720S

	Design		START	RUN	MAGIS	ETS	ETS alternative	ES
MITSUBISHI								
PAJERO SPORT 2.5 TDI		11-99→						ES100720S
PAJERO SPORT 3.0 I V6 24V		11-99→						ES100720S
SPACE GEAR 2.5 TD I, TDI 4WD, 2.8 TD I		01-95→05-00						ES100720S
SPACE STAR 1.3 16V	(DG0)	09/00→		RUN62D	MAG62D	ETS62ND	ETS60D3N	438320ES
SPACE STAR 1.3 16V	(DG0)	12/98→		RUN62D	MAG62D	ETS62ND	ETS60D3N	438320ES
SPACE STAR 1.3 16V	(DG0)	06/98→		RUN62D	MAG62D	ETS62ND	ETS60D3N	438320ES
SPACE STAR 1.6 16V	(DG0)	01/01→		RUN62D	MAG62D	ETS62ND	ETS60D3N	438320ES
SPACE STAR 1.6	(DG0)	04/01→03/06		RUN62D	MAG62D	ETS62ND	ETS60D3N	438320ES
SPACE STAR 1.8 MPI	(DG0)	10/02→		RUN62D	MAG62D	ETS62ND	ETS60D3N	438320ES
SPACE STAR 1.8 GDI	(DG0)	06/98→		RUN62D	MAG62D	ETS62ND	ETS60D3N	438320ES
SPACE STAR 1.8 GDI	(DG0)	06/98→		RUN62D	MAG62D	ETS62ND	ETS60D3N	438320ES
SPACE STAR 1.9 DI-D	(DG0)	02/01→		RUN72D	MAG74D	ETS74ND	ETS70D1N-ETS74DI	476420ES
SPACE STAR 1.9 DI-D	(DG0)	10/02→		RUN72D	MAG74D	ETS74ND	ETS70D1N-ETS74DI	476420ES
SPACE RUNNER 2.0 TD		02-91→08-99						ES100720S
MORGAN								
AERO 8 4.4		10/00→						ES45330S
AERO 8 4.4		04/04→						ES45330S
FOUR FOUR 1.6 i Kat		08/91→						ES45330S
FOUR FOUR 1.8 i		01/93→						ES45330S
PLUS FOUR 1.8 i		01/93→						ES45330S
PLUS FOUR 2.0 i		08/92→						ES45330S
PLUS EIGHT 3.9		08/90→						ES45330S
PLUS EIGHT 3.9		05/95→10/03						ES45330S
PLUS EIGHT 4.6		11/97→10/01						ES45330S
PLUS EIGHT 4.6		01/96→						ES45330S
NISSAN								
ALMERA II Hatchback 1.5	(N16)	10/02→			MAG44DB	ETS44NDB		ES45NDB
ALMERA II Hatchback 1.5	(N16)	03/00→			MAG44DB	ETS44NDB		ES45NDB
ALMERA II Hatchback 1.8	(N16)	01/00→			MAG62DB	ETS60NDB-ETS50NDB		ES60NDB
ALMERA II Hatchback 1.8	(N16)	10/02→			MAG62DB	ETS60NDB-ETS50NDB		ES60NDB
ALMERA II Hatchback 1.5 dCi	(N16)	01/03→			MAG72DB	ETS71NDB		
ALMERA II Hatchback 2.2 Di	(N16)	03/00→			MAG72DB	ETS71NDB		
ALMERA II Hatchback 2.2 dCi	(N16)	09/03→			MAG72DB	ETS71NDB		
ALMERA II Hatchback 2.2 dCi	(N16)	09/03→			MAG72DB	ETS71NDB		
ALMERA II 1.5	(N16)	10/02→			MAG44DB	ETS44NDB		ES45NDB
ALMERA II 1.5	(N16)	07/00→			MAG44DB	ETS44NDB		ES45NDB
ALMERA II 1.8	(N16)	07/00→			MAG62DB	ETS60NDB-ETS50NDB		ES60NDB
ALMERA II 1.8	(N16)	10/02→			MAG62DB	ETS60NDB-ETS50NDB		ES60NDB
ALMERA II 1.5 dCi	(N16)	01/03→			MAG72DB	ETS71NDB		
ALMERA II 2.2 Di	(N16)	07/00→			MAG72DB	ETS71NDB		
ALMERA II 2.2 dCi	(N16)	09/03→			MAG72DB	ETS71NDB		
ALMERA II 2.2 dCi	(N16)	09/03→			MAG72DB	ETS71NDB		
ALMERA TINO 1.8	(V10)	08/00→			MAG62DB	ETS60NDB-ETS50NDB		ES60NDB
ALMERA TINO 1.8	(V10)	12/02→			MAG62DB	ETS60NDB-ETS50NDB		ES60NDB
ALMERA TINO 2.0	(V10)	08/00→			MAG44DB	ETS44NDB		ES45NDB

	Design		START	RUN	MAGIS	ETS	ETS alternative	ES
NISSAN								
ALMERA TINO 2.2 dCi	(V10)	09/03→		RUN72D	MAG74D	ETS74ND	ETS70D1N-ETS74DI	476420ES
ALMERA TINO 2.2 Di	(V10)	08/00→			MAG72DB	ETS71NDB		
ALMERA TINO 2.2 dCi	(V10)	09/03→		RUN72D	MAG74D	ETS74ND	ETS70D1N-ETS74DI	476420ES
ALMERA 1.9 TD		09-02→			MAG100D	ETS100ND-ETS100KD	ETS100D2N-ETSD1N	
KING CAB 2.5 D (JAP.)								ES100720S
KING-CAB 2.5 D		03-86→						ES100720S
KUBISTAR 1.2	(X76)	08/03→			MAG44DB	ETS44NDB		ES45NDB
KUBISTAR 1.2 16V	(X76)	04/06→			MAG44DB	ETS44NDB		ES45NDB
KUBISTAR 1.6 16V	(X76)	08/03→			MAG44DB	ETS44NDB		ES45NDB
KUBISTAR 1.5 dCi	(X76)	08/03→			MAG72DB	ETS71NDB		
KUBISTAR 1.5 dCi	(X76)	08/05→			MAG72DB	ETS71NDB		
KUBISTAR 1.5 dCi	(X76)	08/03→			MAG72DB	ETS71NDB		
KUBISTAR 1.5 dCi 70	(X76)	04/06→			MAG72DB	ETS71NDB		
KUBISTAR 1.5 dCi	(X76)	08/03→			MAG72DB	ETS71NDB		
KUBISTAR 1.5 dCi 85	(X76)	04/06→			MAG72DB	ETS71NDB		
L 35								ES100720S
MICRA 1.0	(K11)	01/92→04/93						ES45300DJ
MICRA 1.0 i 16V	(K11)	08/92→09/00						ES45300DJ
MICRA 1.0 i 16V	(K11)	09/00→02/03						ES45300DJ
MICRA 1.3 i 16V	(K11)	08/92→09/00						ES45300DJ
MICRA 1.4 i 16V	(K11)	09/00→02/03			MAG44DB	ETS44NDB		ES45NDB
MICRA 1.5 D	(K11)	02/98→02/03			MAG62DB	ETS60NDB-ETS50NDB		ES60NDB
MICRA 1.0 16V	(K12)	01/03→			MAG44DB	ETS44NDB		ES45NDB
MICRA 1.2 16V	(K12)	01/03→			MAG44DB	ETS44NDB		ES45NDB
MICRA 1.2 16V	(K12)	01/03→			MAG44DB	ETS44NDB		ES45NDB
MICRA 1.4 16V	(K12)	01/03→			MAG44DB	ETS44NDB		ES45NDB
MICRA 160 SR	(K12)	05/05→			MAG62DB	ETS60NDB-ETS50NDB		ES60NDB
MICRA 1.5 dCi	(K12)	01/03→			MAG62DB	ETS60NDB-ETS50NDB		ES60NDB
MICRA 1.5 dCi	(K12)	06/05→			MAG62DB	ETS60NDB-ETS50NDB		ES60NDB
MICRA 1.5 dCi	(K12)	09/03→			MAG62DB	ETS60NDB-ETS50NDB		ES60NDB
MICRA 1.5 dCi	(K12)	06/05→			MAG62DB	ETS60NDB-ETS50NDB		ES60NDB
MICRA C+C 1.4 16V	(K12)	08/05→			MAG44DB	ETS44NDB		ES45NDB
MICRA C+C 1.6 160 SR	(K12)	08/05→			MAG62DB	ETS60NDB-ETS50NDB		ES60NDB
NAVARA 2.5 dCi	(D40)	07/05→		RUN72D	MAG74D	ETS74ND	ETS70D1N-ETS74DI	476420ES
NAVARA 2.5 dCi 4WD	(D40)	10/06→		RUN72D	MAG74D	ETS74ND	ETS70D1N-ETS74DI	476420ES
NAVARA 2.5 dCi 4WD	(D40)	07/05→		RUN72D	MAG74D	ETS74ND	ETS70D1N-ETS74DI	476420ES
NAVARA 2.8 D	(D40)	10/04→		RUN72D	MAG74D	ETS74ND	ETS70D1N-ETS74DI	476420ES
NOTE 1.4	(E11)	03/06→			MAG44DB	ETS44NDB		ES45NDB
NOTE 1.6	(E11)	03/06→			MAG44DB	ETS44NDB		ES45NDB
NOTE 1.5 dCi	(E11)	03/06→			MAG62DB	ETS60NDB-ETS50NDB		ES60NDB
NOTE 1.5 dCi	(E11)	03/06→			MAG62DB	ETS60NDB-ETS50NDB		ES60NDB
NOTE 1.5 dCi	(E11)	07/08→			MAG62DB	ETS60NDB-ETS50NDB		ES60NDB
PATHFINDER 2.7 TD 4WD	(R50)	09/97→12/04		RUN72D	MAG74D	ETS74ND	ETS70D1N-ETS74DI	476420ES
PATHFINDER 4.0 4WD	(R51)	09/05→		RUN62D	MAG62D	ETS62ND	ETS60D3N	438320ES
PATHFINDER 2.5 dCi 4WD	(R51)	10/06→		RUN72D	MAG74D	ETS74ND	ETS70D1N-ETS74DI	476420ES
PATHFINDER 2.5 DCi	(R51)	01/05→		RUN72D	MAG74D	ETS74ND	ETS70D1N-ETS74DI	476420ES
PATHFINDER 2.5 dCi 4WD	(R51)	03/05→		RUN72D	MAG74D	ETS74ND	ETS70D1N-ETS74DI	476420ES

	Design		START	RUN	MAGIS	ETS	ETS alternative	ES
NISSAN								
PATROL 2.8, 3.0 DDTI		08-03→			MAG100D	ETS100ND-ETS100KD	ETS100D2N-ETSD1N	
PATROL GR Y60D		01-89→11-95			MAG100D	ETS100ND-ETS100KD	ETS100D2N-ETSD1N	
PATROL 2.8 TD SLX		07-89→11-95						ES100720S
PIXO 1.0	(UA0)	06/09→						ES35240SJ
PRIMERA Hatchback 1.6	(P10)	06/90→01/96		RUN62D	MAG62D	ETS62ND	ETS60D3N	438320ES
PRIMERA Hatchback 1.6	(P10)	06/90→06/93		RUN62D	MAG62D	ETS62ND	ETS60D3N	438320ES
PRIMERA Hatchback 1.6	(P10)	06/93→01/96		RUN62D	MAG62D	ETS62ND	ETS60D3N	438320ES
PRIMERA Hatchback 2.0 16V	(P10)	06/90→01/96		RUN62D	MAG62D	ETS62ND	ETS60D3N	438320ES
PRIMERA Hatchback 2.0 16V 4x4	(P10)	04/91→06/96		RUN62D	MAG62D	ETS62ND	ETS60D3N	438320ES
PRIMERA Hatchback 2.0 i	(P10)	01/95→06/96		RUN62D	MAG62D	ETS62ND	ETS60D3N	438320ES
PRIMERA Hatchback 2.0	(P10)	06/90→01/96		RUN62D	MAG62D	ETS62ND	ETS60D3N	438320ES
PRIMERA Hatchback 2.0 D	(P10)	01/91→01/96		RUN72D	MAG74D	ETS74ND	ETS70D1N-ETS74DI	476420ES
PRIMERA 1.6	(P10)	06/90→01/96		RUN62D	MAG62D	ETS62ND	ETS60D3N	438320ES
PRIMERA 1.6	(P10)	06/90→01/96		RUN62D	MAG62D	ETS62ND	ETS60D3N	438320ES
PRIMERA 1.6	(P10)	06/93→01/96		RUN62D	MAG62D	ETS62ND	ETS60D3N	438320ES
PRIMERA 2.0 16V	(P10)	06/90→01/96		RUN62D	MAG62D	ETS62ND	ETS60D3N	438320ES
PRIMERA 2.0 16V 4x4	(P10)	04/91→06/96		RUN62D	MAG62D	ETS62ND	ETS60D3N	438320ES
PRIMERA 2.0 i	(P10)	01/95→06/96		RUN50D	MAG50D	ETS50ND	ETS50D3N-ETS50D4N	
PRIMERA 2.0 D	(P10)	01/91→01/96		RUN72D	MAG74D	ETS74ND	ETS70D1N-ETS74DI	476420ES
PRIMERA Traveller 1.6 i	(W10)	07/90→03/98		RUN62D	MAG62D	ETS62ND	ETS60D3N	438320ES
PRIMERA Traveller 1.6 i	(W10)	03/94→03/98		RUN62D	MAG62D	ETS62ND	ETS60D3N	438320ES
PRIMERA Traveller 2.0 i	(W10)	07/90→03/98		RUN62D	MAG62D	ETS62ND	ETS60D3N	438320ES
PRIMERA Traveller 2.0 D	(W10)	07/90→12/95		RUN72D	MAG74D	ETS74ND	ETS70D1N-ETS74DI	476420ES
PRIMERA Hatchback 1.6 16V	(P11)	09/96→07/02		RUN62D	MAG62D	ETS62ND	ETS60D3N	438320ES
PRIMERA Hatchback 1.6 16V	(P11)	09/96→07/02		RUN62D	MAG62D	ETS62ND	ETS60D3N	438320ES
PRIMERA Hatchback 1.6 16V	(P11)	09/00→07/02		RUN62D	MAG62D	ETS62ND	ETS60D3N	438320ES
PRIMERA Hatchback 1.8 16V	(P11)	08/99→07/02		RUN62D	MAG62D	ETS62ND	ETS60D3N	438320ES
PRIMERA Hatchback 2.0 16V	(P11)	09/96→07/02		RUN62D	MAG62D	ETS62ND	ETS60D3N	438320ES
PRIMERA Hatchback 2.0 16V	(P11)	09/96→07/02		RUN62D	MAG62D	ETS62ND	ETS60D3N	438320ES
PRIMERA Hatchback 2.0 16V	(P11)	08/99→07/02		RUN62D	MAG62D	ETS62ND	ETS60D3N	438320ES
PRIMERA Hatchback 2.0 16V	(P11)	09/96→07/02		RUN62D	MAG62D	ETS62ND	ETS60D3N	438320ES
PRIMERA Hatchback 2.0 TD	(P11)	09/96→07/02		RUN72D	MAG74D	ETS74ND	ETS70D1N-ETS74DI	476420ES
PRIMERA 2.0 LXD SW		01-91→06-96			MAG100D	ETS100ND-ETS100KD	ETS100D2N-ETSD1N	
PRIMERA 2.0 TD SW		06-96→07-02			MAG100D	ETS100ND-ETS100KD	ETS100D2N-ETSD1N	
PRIMERA 1.6 16V	(P11)	09/96→12/01		RUN62D	MAG62D	ETS62ND	ETS60D3N	438320ES
PRIMERA 1.6 16V	(P11)	09/96→10/00		RUN62D	MAG62D	ETS62ND	ETS60D3N	438320ES
PRIMERA 1.6 16V	(P11)	06/96→12/01		RUN62D	MAG62D	ETS62ND	ETS60D3N	438320ES
PRIMERA 1.8 16V	(P11)	08/99→12/01		RUN62D	MAG62D	ETS62ND	ETS60D3N	438320ES
PRIMERA 2.0 16V	(P11)	09/96→12/01		RUN62D	MAG62D	ETS62ND	ETS60D3N	438320ES
PRIMERA 2.0 16V	(P11)	09/96→12/01		RUN62D	MAG62D	ETS62ND	ETS60D3N	438320ES
PRIMERA 2.0 16V	(P11)	08/99→12/01		RUN62D	MAG62D	ETS62ND	ETS60D3N	438320ES
PRIMERA 2.0 16V	(P11)	09/96→12/01		RUN62D	MAG62D	ETS62ND	ETS60D3N	438320ES
PRIMERA 2.0 TD	(P11)	09/96→12/01		RUN72D	MAG74D	ETS74ND	ETS70D1N-ETS74DI	476420ES
PRIMERA Traveller 1.6 16V	(WP11)	04/98→12/01		RUN62D	MAG62D	ETS62ND	ETS60D3N	438320ES
PRIMERA Traveller 1.6 16V	(WP11)	04/98→12/01		RUN62D	MAG62D	ETS62ND	ETS60D3N	438320ES
PRIMERA Traveller 1.8 16V	(WP11)	08/99→12/01		RUN62D	MAG62D	ETS62ND	ETS60D3N	438320ES
PRIMERA Traveller 2.0 16V	(WP11)	04/98→12/01		RUN62D	MAG62D	ETS62ND	ETS60D3N	438320ES

	Design		START	RUN	MAGIS	ETS	ETS alternative	ES
NISSAN								
PRIMERA Traveller 2.0 16V	(WP11)	04/98→12/01		RUN62D	MAG62D	ETS62ND	ETS60D3N	438320ES
PRIMERA Traveller 2.0 16V	(WP11)	08/99→12/01		RUN62D	MAG62D	ETS62ND	ETS60D3N	438320ES
PRIMERA Traveller 2.0 TD	(WP11)	04/98→12/01		RUN72D	MAG74D	ETS74ND	ETS70D1N-ETS74DI	476420ES
PRIMERA Hatchback 1.6	(P12)	07/02→		RUN62D	MAG62D	ETS62ND	ETS60D3N	438320ES
PRIMERA Hatchback 1.6	(P12)	07/02→		RUN62D	MAG62D	ETS62ND	ETS60D3N	438320ES
PRIMERA Hatchback 1.8	(P12)	07/02→		RUN62D	MAG62D	ETS62ND	ETS60D3N	438320ES
PRIMERA Hatchback 2.0	(P12)	07/02→		RUN62D	MAG62D	ETS62ND	ETS60D3N	438320ES
PRIMERA Hatchback 1.9 dCi	(P12)	08/02→		RUN72D	MAG74D	ETS74ND	ETS70D1N-ETS74DI	476420ES
PRIMERA Hatchback 1.9 dCi	(P12)	04/03→		RUN72D	MAG74D	ETS74ND	ETS70D1N-ETS74DI	476420ES
PRIMERA Hatchback 2.2 Di	(P12)	07/02→		RUN72D	MAG74D	ETS74ND	ETS70D1N-ETS74DI	476420ES
PRIMERA Hatchback 2.2 dCi	(P12)	04/03→		RUN72D	MAG74D	ETS74ND	ETS70D1N-ETS74DI	476420ES
PRIMERA 1.6	(P12)	03/02→		RUN62D	MAG62D	ETS62ND	ETS60D3N	438320ES
PRIMERA 1.6	(P12)	01/02→		RUN62D	MAG62D	ETS62ND	ETS60D3N	438320ES
PRIMERA 1.8	(P12)	03/02→		RUN62D	MAG62D	ETS62ND	ETS60D3N	438320ES
PRIMERA 2.0	(P12)	03/02→		RUN62D	MAG62D	ETS62ND	ETS60D3N	438320ES
PRIMERA 1.9 dCi	(P12)	08/02→		RUN72D	MAG74D	ETS74ND	ETS70D1N-ETS74DI	476420ES
PRIMERA 1.9 dCi	(P12)	04/03→		RUN72D	MAG74D	ETS74ND	ETS70D1N-ETS74DI	476420ES
PRIMERA 2.2 Di	(P12)	03/02→		RUN72D	MAG74D	ETS74ND	ETS70D1N-ETS74DI	476420ES
PRIMERA 2.2 dCi	(P12)	04/03→		RUN72D	MAG74D	ETS74ND	ETS70D1N-ETS74DI	476420ES
PRIMERA Estate 1.6 Visia	(WP12)	01/02→		RUN62D	MAG62D	ETS62ND	ETS60D3N	438320ES
PRIMERA Estate 1.8	(WP12)	03/02→		RUN62D	MAG62D	ETS62ND	ETS60D3N	438320ES
PRIMERA Estate 2.0	(WP12)	03/02→		RUN62D	MAG62D	ETS62ND	ETS60D3N	438320ES
PRIMERA Estate 1.9 dCi	(WP12)	08/02→		RUN72D	MAG74D	ETS74ND	ETS70D1N-ETS74DI	476420ES
PRIMERA Estate 1.9 dCi	(WP12)	04/03→		RUN72D	MAG74D	ETS74ND	ETS70D1N-ETS74DI	476420ES
PRIMERA Estate 2.2 Di	(WP12)	03/02→		RUN72D	MAG74D	ETS74ND	ETS70D1N-ETS74DI	476420ES
PRIMERA Estate 2.2 dCi	(WP12)	04/03→		RUN72D	MAG74D	ETS74ND	ETS70D1N-ETS74DI	476420ES
QASHQAI 1.6	(J10, JJ10)	02/07→		RUN50D	MAG50D	ETS50ND	ETS50D3N-ETS50D4N	
QASHQAI 2.0	(J10, JJ10)	02/07→		RUN62D	MAG62D	ETS62ND	ETS60D3N	438320ES
QASHQAI 2.0 All-wheel Drive	(J10, JJ10)	02/07→		RUN62D	MAG62D	ETS62ND	ETS60D3N	438320ES
QASHQAI 1.5 dCi	(J10, JJ10)	07/08→		RUN72D	MAG74D	ETS74ND	ETS70D1N-ETS74DI	476420ES
QASHQAI 1.5 dCi	(J10, JJ10)	02/07→		RUN72D	MAG74D	ETS74ND	ETS70D1N-ETS74DI	476420ES
QASHQAI 2.0 dCi	(J10, JJ10)	02/07→		RUN72D	MAG74D	ETS74ND	ETS70D1N-ETS74DI	476420ES
QASHQAI 2.0 dCi All-wheel Drive	(J10, JJ10)	02/07→		RUN72D	MAG74D	ETS74ND	ETS70D1N-ETS74DI	476420ES
SUNNY III Liftback 1.4 i	(N14)	10/90→05/95						ES45300D
SUNNY III Liftback 1.4 i 16V	(N14)	10/90→06/95						ES45300D
SUNNY III Liftback 1.6 i	(N14)	10/90→05/95						ES45300D
SUNNY III Liftback 1.6 i 16V	(N14)	10/92→05/95						ES45300D
SUNNY III Hatchback 1.4 i	(N14)	10/90→05/95						ES45300D
SUNNY III Hatchback 1.4 i 16V	(N14)	10/90→05/95						ES45300D
SUNNY III Hatchback 1.5	(N14)	10/90→05/95						ES45300D
SUNNY III Hatchback 1.6 i	(N14)	10/90→05/95						ES45300D
SUNNY III Hatchback 1.6 i 16V	(N14)	10/92→05/95						ES45300D
SUNNY III 1.4 i	(N14)	10/90→05/95						ES45300D
SUNNY III 1.4 i 16V	(N14)	10/90→06/95						ES45300D
SUNNY III 1.6 i	(N14)	10/90→05/95						ES45300D
SUNNY III 1.6 i 16V	(N14)	10/92→05/95						ES45300D
SUNNY III Traveller 1.6 i	(Y10)	06/91→03/00						ES45300D

	Design		START	RUN	MAGIS	ETS	ETS alternative	ES
NISSAN								
SUNNY Box 1.6 i 16V	(Y10)	10/92→03/00						ES45300D
SUNNY 2.0 SLXD		01-91→03-00			MAG100D	ETS100ND-ETS100KD	ETS100D2N-ETSD1N	
TIIDA Hatchback 1.6	(C11X)	09/07→						ES45300D
TIIDA Hatchback 1.8	(C11X)	09/07→		RUN62D	MAG62D	ETS62ND	ETS60D3N	438320ES
TIIDA Hatchback 1.5 dCi	(C11X)	09/07→		RUN62D	MAG62D	ETS62ND	ETS60D3N	438320ES
TIIDA Saloon 1.6	(SC11X)	09/07→						ES45300D
TIIDA Saloon 1.8	(SC11X)	09/07→		RUN62D				
TIIDA Saloon 1.5 dCi	(SC11X)	09/07→		RUN62D	MAG62D	ETS62ND	ETS60D3N	438320ES
TITAN 5.6 Flex-Fuel 4WD		01/04→12/07		RUN72D	MAG74D	ETS74ND	ETS70D1N-ETS74DI	476420ES
TERRANO II 2.4 4WD	(R20)	05/96→01/02		RUN62D	MAG62D	ETS62ND	ETS60D3N	438320ES
TERRANO II 2.4 4WD	(R20)	05/96→		RUN62D	MAG62D	ETS62ND	ETS60D3N	438320ES
TERRANO 2.7 TD		04-88→02-96			MAG100D	ETS100ND-ETS100KD	ETS100D2N-ETSD1N	
TERRANO II 2.7 TDI		12-00→						ES100720S
TERRANO II 2.7 TDI 4x4		02-93→						ES100720S
TRADE 2.0, 2.8, 75 D, 100 TD								ES100720S
TRADE 75 D								ES100720S
URVAN 2.3 D, 2.5 D								ES100720S
INTERSTAR Bus dCi 80	(X70)	07/02→		RUN95D		ETS92ND-ETS95D1N		434440ES
INTERSTAR Bus dCI 90	(X70)	07/02→		RUN95D		ETS92ND-ETS95D1N		434440ES
INTERSTAR Bus dCi 100	(X70)	11/03→		RUN95D		ETS92ND-ETS95D1N		434440ES
INTERSTAR Bus dCi 100	(X70)	04/06→		RUN95D		ETS92ND-ETS95D1N		434440ES
INTERSTAR Bus dCi 120	(X70)	07/02→		RUN95D		ETS92ND-ETS95D1N		434440ES
INTERSTAR Bus dCi 120	(X70)	09/06→		RUN95D		ETS92ND-ETS95D1N		434440ES
INTERSTAR Bus dCi 140	(X70)	11/03→		RUN95D		ETS92ND-ETS95D1N		434440ES
INTERSTAR Bus dCi 150	(X70)	09/06→		RUN95D		ETS92ND-ETS95D1N		434440ES
INTERSTAR Box dCi 80	(X70)	07/02→		RUN95D		ETS92ND-ETS95D1N		434440ES
INTERSTAR Box dCI 90	(X70)	07/02→		RUN95D		ETS92ND-ETS95D1N		434440ES
INTERSTAR Box dCi 100	(X70)	11/03→		RUN95D		ETS92ND-ETS95D1N		434440ES
INTERSTAR Box dCi 100	(X70)	04/06→		RUN95D		ETS92ND-ETS95D1N		434440ES
INTERSTAR Box dCi 120	(X70)	07/02→		RUN95D		ETS92ND-ETS95D1N		434440ES
INTERSTAR Box dCi 120	(X70)	07/02→		RUN95D		ETS92ND-ETS95D1N		434440ES
INTERSTAR Box dCi 150	(X70)	09/06→		RUN95D		ETS92ND-ETS95D1N		434440ES
INTERSTAR Box dCi 140	(X70)	11/03→		RUN95D		ETS92ND-ETS95D1N		434440ES
INTERSTAR Flatbed / Chassis dCi 100		02/04→		RUN95D		ETS92ND-ETS95D1N		434440ES
INTERSTAR Flatbed / Chassis dCi 120		08/03→		RUN95D		ETS92ND-ETS95D1N		434440ES
INTERSTAR Flatbed / Chassis dCi 120		08/06→		RUN95D		ETS92ND-ETS95D1N		434440ES
INTERSTAR Flatbed / Chassis dCi 150		08/06→		RUN95D		ETS92ND-ETS95D1N		434440ES
INTERSTAR Flatbed / Chassis dCi 140		11/03→		RUN95D		ETS92ND-ETS95D1N		434440ES
OPEL								
AGILA 1.0 12V	(H00)	09/00→			MAG44DB	ETS44NDB		ES45NDB
AGILA 1.0	(H00)	08/03→			MAG44DB	ETS44NDB		ES45NDB
AGILA 1.2 16V	(H00)	09/00→			MAG44DB	ETS44NDB		ES45NDB
AGILA 1.2 16V Twinport	(H00)	07/04→			MAG44DB	ETS44NDB		ES45NDB
AGILA 1.3 CDTI	(H00)	08/03→			MAG72DB	ETS71NDB		
AGILA 1.0		09/07→			MAG44DB	ETS44NDB		ES45NDB
AGILA 1.2		09/07→			MAG44DB	ETS44NDB		ES45NDB

	Design		START	RUN	MAGIS	ETS	ETS alternative	ES
OPEL								
AGILA 1.3 CDTI		09/07→			MAG72DB	ETS71NDB		
ASTRA F Hatchback 1.4 i	(53_, 54_, 58_, 59_)	03/92→01/98			MAG44DB	ETS44NDB		ES45NDB
ASTRA F Hatchback 1.4	(53_, 54_, 58_, 59_)	09/91→09/93			MAG44DB	ETS44NDB		ES45NDB
ASTRA F Hatchback 1.4 Si	(53_, 54_, 58_, 59_)	03/92→01/98			MAG44DB	ETS44NDB		ES45NDB
ASTRA F Hatchback 1.4	(53_, 54_, 58_, 59_)	09/92→01/98			MAG44DB	ETS44NDB		ES45NDB
ASTRA F Hatchback 1.4 i 16V	(53_, 54_, 58_, 59_)	01/96→01/98			MAG44DB	ETS44NDB		ES45NDB
ASTRA F Hatchback 1.6 i	(53_, 54_, 58_, 59_)	05/93→07/96			MAG44DB	ETS44NDB		ES45NDB
ASTRA F Hatchback 1.6 i	(53_, 54_, 58_, 59_)	09/91→01/98			MAG44DB	ETS44NDB		ES45NDB
ASTRA F Hatchback 1.6	(53_, 54_, 58_, 59_)	09/95→01/98			MAG44DB	ETS44NDB		ES45NDB
ASTRA F Hatchback 1.6 Si	(53_, 54_, 58_, 59_)	03/92→12/94			MAG44DB	ETS44NDB		ES45NDB
ASTRA F Hatchback 1.6 i 16V	(53_, 54_, 58_, 59_)	08/94→01/98			MAG44DB	ETS44NDB		ES45NDB
ASTRA F Hatchback 1.8 i	(53_, 54_, 58_, 59_)	09/91→01/98			MAG44DB	ETS44NDB		ES45NDB
ASTRA F Hatchback 1.8 i 16V	(53_, 54_, 58_, 59_)	09/94→01/98			MAG44DB	ETS44NDB		ES45NDB
ASTRA F Hatchback 1.8	(53_, 54_, 58_, 59_)	11/91→07/93			MAG44DB	ETS44NDB		ES45NDB
ASTRA F Hatchback 1.8 i 16V	(53_, 54_, 58_, 59_)	06/93→08/94			MAG44DB	ETS44NDB		ES45NDB
ASTRA F Hatchback 2.0 i	(53_, 54_, 58_, 59_)	09/91→01/98			MAG62DB	ETS60NDB-ETS50NDB		ES60NDB
ASTRA F Hatchback 2.0 i 16V	(53_, 54_, 58_, 59_)	02/95→01/98			MAG62DB	ETS60NDB-ETS50NDB		ES60NDB
ASTRA F Hatchback 2.0 GSI 16V	(53_, 54_, 58_, 59_)	09/91→01/98			MAG62DB	ETS60NDB-ETS50NDB		ES60NDB
ASTRA F Hatchback 1.7 D	(53_, 54_, 58_, 59_)	12/91→09/92			MAG72DB	ETS71NDB		
ASTRA F Hatchback 1.7 D	(53_, 54_, 58_, 59_)	07/92→01/98			MAG72DB	ETS71NDB		
ASTRA F Hatchback 1.7 TD	(53_, 54_, 58_, 59_)	11/94→01/98			MAG72DB	ETS71NDB		
ASTRA F Hatchback 1.7 TDS	(53_, 54_, 58_, 59_)	12/91→01/98			MAG72DB	ETS71NDB		
ASTRA F 1.4 i	(56_, 57_)	09/91→09/98			MAG44DB	ETS44NDB		ES45NDB
ASTRA F 1.4	(56_, 57_)	09/91→09/93			MAG44DB	ETS44NDB		ES45NDB
ASTRA F 1.4 Si	(56_, 57_)	03/92→09/98			MAG44DB	ETS44NDB		ES45NDB
ASTRA F 1.4	(56_, 57_)	09/92→09/98			MAG44DB	ETS44NDB		ES45NDB
ASTRA F 1.4 i 16V	(56_, 57_)	02/96→09/98			MAG44DB	ETS44NDB		ES45NDB
ASTRA F 1.6 i	(56_, 57_)	05/93→07/96			MAG44DB	ETS44NDB		ES45NDB
ASTRA F 1.6 i	(56_, 57_)	03/92→09/98			MAG44DB	ETS44NDB		ES45NDB
ASTRA F 1.6 i	(56_, 57_)	08/96→09/98			MAG44DB	ETS44NDB		ES45NDB
ASTRA F 1.6	(56_, 57_)	09/95→09/98			MAG44DB	ETS44NDB		ES45NDB
ASTRA F 1.6 Si	(56_, 57_)	05/92→12/94			MAG44DB	ETS44NDB		ES45NDB
ASTRA F 1.6 i 16V	(56_, 57_)	08/94→09/98			MAG44DB	ETS44NDB		ES45NDB
ASTRA F 1.8 i	(56_, 57_)	03/92→09/98			MAG44DB	ETS44NDB		ES45NDB
ASTRA F 1.8 i 16V	(56_, 57_)	11/94→09/98			MAG44DB	ETS44NDB		ES45NDB
ASTRA F 1.8 i 16V	(56_, 57_)	06/93→10/94			MAG44DB	ETS44NDB		ES45NDB
ASTRA F 2.0 i	(56_, 57_)	03/92→09/98			MAG62DB	ETS60NDB-ETS50NDB		ES60NDB
ASTRA F 2.0 i 16V	(56_, 57_)	02/95→09/98			MAG62DB	ETS60NDB-ETS50NDB		ES60NDB
ASTRA F 1.7 D	(56_, 57_)	03/92→09/92			MAG72DB	ETS71NDB		
ASTRA F 1.7 D	(56_, 57_)	07/92→09/98			MAG72DB	ETS71NDB		
ASTRA F 1.7 TD	(56_, 57_)	11/94→09/98			MAG72DB	ETS71NDB		
ASTRA F 1.7 TDS	(56_, 57_)	03/92→09/98			MAG72DB	ETS71NDB		
ASTRA F Estate 1.4 i	(51_, 52_)	09/91→01/98			MAG44DB	ETS44NDB		ES45NDB
ASTRA F Estate 1.4	(51_, 52_)	09/91→09/93			MAG44DB	ETS44NDB		ES45NDB
ASTRA F Estate 1.4 Si	(51_, 52_)	03/92→01/98			MAG44DB	ETS44NDB		ES45NDB
ASTRA F Estate 1.4	(51_, 52_)	09/92→01/98			MAG44DB	ETS44NDB		ES45NDB
ASTRA F Estate 1.4 i 16V	(51_, 52_)	02/96→01/98			MAG44DB	ETS44NDB		ES45NDB

	Design		START	RUN	MAGIS	ETS	ETS alternative	ES
OPEL								
ASTRA F Estate 1.6 i	(51_, 52_)	05/93→07/96			MAG44DB	ETS44NDB		ES45NDB
ASTRA F Estate 1.6 i	(51_, 52_)	09/91→01/98			MAG44DB	ETS44NDB		ES45NDB
ASTRA F Estate 1.6	(51_, 52_)	09/95→01/98			MAG44DB	ETS44NDB		ES45NDB
ASTRA F Estate 1.6 Si	(51_, 52_)	03/92→12/94			MAG44DB	ETS44NDB		ES45NDB
ASTRA F Estate 1.6 i 16V	(51_, 52_)	08/94→01/98			MAG44DB	ETS44NDB		ES45NDB
ASTRA F Estate 1.8 i	(51_, 52_)	09/91→01/98			MAG44DB	ETS44NDB		ES45NDB
ASTRA F Estate 1.8 i 16V	(51_, 52_)	07/94→01/98			MAG44DB	ETS44NDB		ES45NDB
ASTRA F Estate 1.8 i 16V	(51_, 52_)	06/93→01/98			MAG44DB	ETS44NDB		ES45NDB
ASTRA F Estate 2.0 i	(51_, 52_)	09/91→07/94			MAG62DB	ETS60NDB-ETS50NDB		ES60NDB
ASTRA F Estate 2.0 i 16V	(51_, 52_)	02/95→01/98			MAG62DB	ETS60NDB-ETS50NDB		ES60NDB
ASTRA F Estate 2.0 i 16V	(51_, 52_)	03/93→01/98			MAG62DB	ETS60NDB-ETS50NDB		ES60NDB
ASTRA F Estate 1.7 D	(51_, 52_)	12/91→09/92			MAG72DB	ETS71NDB		
ASTRA F Estate 1.7 D	(51_, 52_)	07/92→01/98			MAG72DB	ETS71NDB		
ASTRA F Estate 1.7 TD	(51_, 52_)	11/94→01/98			MAG72DB	ETS71NDB		
ASTRA F Estate 1.7 TDS	(51_, 52_)	12/91→01/98			MAG72DB	ETS71NDB		
ASTRA F Convertible 1.4 Si	(53_B)	05/93→03/01			MAG44DB	ETS44NDB		ES45NDB
ASTRA F Convertible 1.4 i 16V	(53_B)	01/96→03/01			MAG44DB	ETS44NDB		ES45NDB
ASTRA F Convertible 1.6 i	(53_B)	03/93→08/96			MAG44DB	ETS44NDB		ES45NDB
ASTRA F Convertible 1.6 i	(53_B)	01/96→03/01			MAG44DB	ETS44NDB		ES45NDB
ASTRA F Convertible 1.8 i 16V	(53_B)	11/94→03/01			MAG44DB	ETS44NDB		ES45NDB
ASTRA F Convertible 2.0 i	(53_B)	03/93→10/94			MAG62DB	ETS60NDB-ETS50NDB		ES60NDB
ASTRA F Van 1.4 i	(55_)	10/91→01/99			MAG44DB	ETS44NDB		ES45NDB
ASTRA F Van 1.6 i	(55_)	10/91→04/93			MAG44DB	ETS44NDB		ES45NDB
ASTRA F Van 1.6 i	(55_)	02/93→07/96			MAG44DB	ETS44NDB		ES45NDB
ASTRA F Van 1.7 D	(55_)	12/91→09/92			MAG72DB	ETS71NDB		
ASTRA F Van 1.7 D	(55_)	07/92→01/99			MAG72DB	ETS71NDB		
ASTRA F Van 1.7 TD	(55_)	08/94→01/99			MAG72DB	ETS71NDB		
ASTRA F CLASSIC Hatchback 1.2 i		03/98→08/00			MAG44DB	ETS44NDB		ES45NDB
ASTRA F CLASSIC Hatchback 1.4 i		01/98→08/02			MAG44DB	ETS44NDB		ES45NDB
ASTRA F CLASSIC Hatchback 1.4 i		03/98→08/00			MAG44DB	ETS44NDB		ES45NDB
ASTRA F CLASSIC Hatchback 1.6 i		01/98→08/02			MAG44DB	ETS44NDB		ES45NDB
ASTRA F CLASSIC Hatchback 1.6 i 16V		01/98→08/02			MAG44DB	ETS44NDB		ES45NDB
ASTRA F CLASSIC Hatchback 1.8 i		03/98→08/00			MAG62DB	ETS60NDB-ETS50NDB		ES60NDB
ASTRA F CLASSIC Hatchback 2.0 i		03/98→08/00			MAG62DB	ETS60NDB-ETS50NDB		ES60NDB
ASTRA F CLASSIC Hatchback 2.0 i		10/99→08/00			MAG62DB	ETS60NDB-ETS50NDB		ES60NDB
ASTRA F CLASSIC Hatchback 1.7 TD		03/98→08/00			MAG72DB	ETS71NDB		
ASTRA F CLASSIC Hatchback 2.0 Di		03/98→08/00			MAG72DB	ETS71NDB		
ASTRA F CLASSIC Hatchback 2.0 DTi		08/99→08/00			MAG72DB	ETS71NDB		
ASTRA F CLASSIC Saloon 1.4 i		01/98→08/02			MAG44DB	ETS44NDB		ES45NDB
ASTRA F CLASSIC Saloon 1.6 i		01/98→08/02			MAG44DB	ETS44NDB		ES45NDB
ASTRA F CLASSIC Saloon 1.6 i 16V		01/98→08/02			MAG44DB	ETS44NDB		ES45NDB
ASTRA F CLASSIC Estate 1.4 i		01/98→01/05			MAG44DB	ETS44NDB		ES45NDB
ASTRA F CLASSIC Estate 1.6 i		01/98→01/05			MAG44DB	ETS44NDB		ES45NDB
ASTRA F CLASSIC Estate 1.6 i 16V		01/98→01/05			MAG44DB	ETS44NDB		ES45NDB
ASTRA F CLASSIC Estate 1.8		02/03→07/04			MAG62DB	ETS60NDB-ETS50NDB		ES60NDB
ASTRA G Hatchback 1.2 16V	(F48_, F08_)	02/98→09/00			MAG44DB	ETS44NDB		ES45NDB
ASTRA G Hatchback 1.2 16V	(F48_, F08_)	09/00→01/05			MAG44DB	ETS44NDB		ES45NDB

	Design		START	RUN	MAGIS	ETS	ETS alternative	ES
OPEL								
ASTRA G Hatchback 1.4	(F48_, F08_)	09/07→12/09			MAG44DB	ETS44NDB		ES45NDB
ASTRA G Hatchback 1.4 16V	(F48_, F08_)	02/98→01/05			MAG44DB	ETS44NDB		ES45NDB
ASTRA G Hatchback 1.6	(F48_, F08_)	02/98→09/00			MAG62DB	ETS60NDB-ETS50NDB		ES60NDB
ASTRA G Hatchback 1.6	(F48_, F08_)	09/00→01/05			MAG62DB	ETS60NDB-ETS50NDB		ES60NDB
ASTRA G Hatchback 1.6	(F48_, F08_)	06/02→03/04			MAG62DB	ETS60NDB-ETS50NDB		ES60NDB
ASTRA G Hatchback 1.6 16V	(F48_, F08_)	02/98→01/05			MAG62DB	ETS60NDB-ETS50NDB		ES60NDB
ASTRA G Hatchback 1.6	(F48_, F08_)	12/02→01/05			MAG62DB	ETS60NDB-ETS50NDB		ES60NDB
ASTRA G Hatchback 1.8 16V	(F48_, F08_)	02/98→09/00			MAG62DB	ETS60NDB-ETS50NDB		ES60NDB
ASTRA G Hatchback 1.8 16V	(F48_, F08_)	09/00→01/05			MAG62DB	ETS60NDB-ETS50NDB		ES60NDB
ASTRA G Hatchback 2.0 16V	(F48_, F08_)	02/98→01/05			MAG62DB	ETS60NDB-ETS50NDB		ES60NDB
ASTRA G Hatchback 2.0 16V OPC	(F48_, F08_)	11/99→09/02			MAG72DB	ETS71NDB		
ASTRA G Hatchback 2.0 OPC	(F48_, F08_)	09/02→01/05			MAG72DB	ETS71NDB		
ASTRA G Hatchback 2.0 OPC	(F48_, F08_)	11/02→01/05			MAG72DB	ETS71NDB		
ASTRA G Hatchback 2.2 16V	(F48_, F08_)	03/01→01/05			MAG72DB	ETS71NDB		
ASTRA G Hatchback 1.7 DTI 16V	(F48_, F08_)	02/00→01/05			MAG62DB	ETS60NDB-ETS50NDB		ES60NDB
ASTRA G Hatchback 1.7 CDTI	(F48_, F08_)	04/03→01/05			MAG72DB	ETS71NDB		
ASTRA G Hatchback 1.7 TD	(F48_, F08_)	02/98→08/00			MAG72DB	ETS71NDB		
ASTRA G Hatchback 2.0 DI	(F48_, F08_)	02/98→01/05			MAG72DB	ETS71NDB		
ASTRA G Hatchback 2.0 DTI 16V	(F48_, F08_)	08/99→01/05			MAG72DB	ETS71NDB		
ASTRA G Hatchback 2.2 DTI	(F48_, F08_)	09/02→01/05			MAG72DB	ETS71NDB		
ASTRA G Saloon 1.2 16V	(F69_)	09/98→09/00			MAG62DB	ETS60NDB-ETS50NDB		ES60NDB
ASTRA G Saloon 1.2 16V	(F69_)	09/00→01/05			MAG62DB	ETS60NDB-ETS50NDB		ES60NDB
ASTRA G Saloon 1.4	(F69_)	09/07→12/09			MAG44DB	ETS44NDB		ES45NDB
ASTRA G Saloon 1.4 16V	(F69_)	09/98→01/05			MAG44DB	ETS44NDB		ES45NDB
ASTRA G Saloon 1.6	(F69_)	09/98→09/00			MAG62DB	ETS60NDB-ETS50NDB		ES60NDB
ASTRA G Saloon 1.6	(F69_)	09/00→01/05			MAG62DB	ETS60NDB-ETS50NDB		ES60NDB
ASTRA G Saloon 1.6 16V	(F69_)	09/98→01/05			MAG62DB	ETS60NDB-ETS50NDB		ES60NDB
ASTRA G Saloon 1.6	(F69_)	12/02→01/05			MAG62DB	ETS60NDB-ETS50NDB		ES60NDB
ASTRA G Saloon 1.8	(F69_)	02/03→01/05			MAG62DB	ETS60NDB-ETS50NDB		ES60NDB
ASTRA G Saloon 1.8 16V	(F69_)	09/98→09/00			MAG62DB	ETS60NDB-ETS50NDB		ES60NDB
ASTRA G Saloon 1.8 16V	(F69_)	09/00→01/05			MAG62DB	ETS60NDB-ETS50NDB		ES60NDB
ASTRA G Saloon 2.0 16V	(F69_)	09/98→01/05			MAG62DB	ETS60NDB-ETS50NDB		ES60NDB
ASTRA G Saloon 2.2 16V	(F69_)	03/01→01/05			MAG72DB	ETS71NDB		
ASTRA G Saloon 1.7 DTI 16V	(F69_)	02/00→01/05			MAG72DB	ETS71NDB		
ASTRA G Saloon 1.7 CDTI	(F69_)	04/03→01/05			MAG72DB	ETS71NDB		
ASTRA G Saloon 1.7 TD	(F69_)	09/98→08/00			MAG72DB	ETS71NDB		
ASTRA G Saloon 2.0 DI	(F69_)	09/98→01/05			MAG72DB	ETS71NDB		
ASTRA G Saloon 2.0 DTI 16V	(F69_)	08/99→01/05			MAG72DB	ETS71NDB		
ASTRA G Saloon 2.2 DTI	(F69_)	09/02→01/05			MAG72DB	ETS71NDB		
ASTRA G Estate 1.2 16V	(F35_)	02/98→09/00			MAG62DB	ETS60NDB-ETS50NDB		ES60NDB
ASTRA G Estate 1.2 16V	(F35_)	09/00→07/04			MAG62DB	ETS60NDB-ETS50NDB		ES60NDB
ASTRA G Estate 1.4	(F35_)	09/07→12/09			MAG44DB	ETS44NDB		ES45NDB
ASTRA G Estate 1.4 16V	(F35_)	06/98→07/04			MAG62DB	ETS60NDB-ETS50NDB		ES60NDB
ASTRA G Estate 1.6	(F35_)	02/98→09/00			MAG62DB	ETS60NDB-ETS50NDB		ES60NDB
ASTRA G Estate 1.6	(F35_)	09/00→07/04			MAG62DB	ETS60NDB-ETS50NDB		ES60NDB
ASTRA G Estate 1.6 CNG	(F35_)	03/03→07/04			MAG62DB	ETS60NDB-ETS50NDB		ES60NDB
ASTRA G Estate 1.6 16V	(F35_)	02/98→07/04			MAG62DB	ETS60NDB-ETS50NDB		ES60NDB

	Design		START	RUN	MAGIS	ETS	ETS alternative	ES
OPEL								
ASTRA G Estate 1.6	(F35_)	12/02→07/04			MAG62DB	ETS60NDB-ETS50NDB		ES60NDB
ASTRA G Estate 1.8 16V	(F35_)	02/98→09/00			MAG62DB	ETS60NDB-ETS50NDB		ES60NDB
ASTRA G Estate 1.8 16V	(F35_)	09/00→07/04			MAG62DB	ETS60NDB-ETS50NDB		ES60NDB
ASTRA G Estate 2.0 16V	(F35_)	02/98→07/04			MAG62DB	ETS60NDB-ETS50NDB		ES60NDB
ASTRA G Estate 1.8	(F35_)	02/03→07/04			MAG62DB	ETS60NDB-ETS50NDB		ES60NDB
ASTRA G Estate 2.0 OPC	(F35_)	09/02→07/04			MAG72DB	ETS71NDB		
ASTRA G Estate 2.0 OPC	(F35_)	11/02→07/04			MAG72DB	ETS71NDB		
ASTRA G Estate 2.2 16V	(F35_)	03/01→07/04			MAG72DB	ETS71NDB		
ASTRA G Estate 1.7 DTI 16V	(F35_)	02/00→07/04			MAG62DB	ETS60NDB-ETS50NDB		ES60NDB
ASTRA G Estate 1.7 CDTI	(F35_)	04/03→07/04			MAG72DB	ETS71NDB		
ASTRA G Estate 1.7 TD	(F35_)	02/98→08/00			MAG72DB	ETS71NDB		
ASTRA G Estate 2.0 DI	(F35_)	02/98→07/04			MAG72DB	ETS71NDB		
ASTRA G Estate 2.0 DTI 16V	(F35_)	08/99→07/04			MAG72DB	ETS71NDB		
ASTRA G Estate 2.2 DTI	(F35_)	09/02→07/04			MAG72DB	ETS71NDB		
ASTRA G Coupe 1.6 16V	(F07_)	03/00→05/05			MAG62DB	ETS60NDB-ETS50NDB		ES60NDB
ASTRA G Coupe 1.8 16V	(F07_)	03/00→10/00			MAG62DB	ETS60NDB-ETS50NDB		ES60NDB
ASTRA G Coupe 1.8 16V	(F07_)	09/00→05/05			MAG62DB	ETS60NDB-ETS50NDB		ES60NDB
ASTRA G Coupe 2.0 16V Turbo	(F07_)	09/00→08/01			MAG72DB	ETS71NDB		
ASTRA G Coupe 2.0 16V Turbo	(F07_)	08/01→05/05			MAG72DB	ETS71NDB		
ASTRA G Coupe 2.0 16V Turbo	(F07_)	11/02→05/05			MAG72DB	ETS71NDB		
ASTRA G Coupe 2.2 16V	(F07_)	09/00→05/05			MAG72DB	ETS71NDB		
ASTRA G Coupe 2.2 DTI	(F07_)	09/02→05/05			MAG72DB	ETS71NDB		
ASTRA G Convertible 1.6 16V		03/01→10/05			MAG62DB	ETS60NDB-ETS50NDB		ES60NDB
ASTRA G Convertible 1.6		01/03→10/05			MAG62DB	ETS60NDB-ETS50NDB		ES60NDB
ASTRA G Convertible 1.8 16V		03/01→10/05			MAG62DB	ETS60NDB-ETS50NDB		ES60NDB
ASTRA G Convertible 2.0 OPC		03/02→10/05			MAG72DB	ETS71NDB		
ASTRA G Convertible 2.0 16V Turbo		11/02→10/05			MAG72DB	ETS71NDB		
ASTRA G Convertible 2.2 16V		03/01→10/05			MAG72DB	ETS71NDB		
ASTRA G Convertible 2.2 DTI		09/02→10/05			MAG72DB	ETS71NDB		
ASTRA G Box 1.6	(F70)	01/99→09/00			MAG62DB	ETS60NDB-ETS50NDB		ES60NDB
ASTRA G Box 1.6	(F70)	09/00→04/05			MAG62DB	ETS60NDB-ETS50NDB		ES60NDB
ASTRA G Box 1.7 TD	(F70)	01/99→04/05			MAG72DB	ETS71NDB		
ASTRA G Box 2.0 DI	(F70)	01/99→04/05			MAG72DB	ETS71NDB		
ASTRA H 1.2		10/06→			MAG44DB	ETS44NDB		ES45NDB
ASTRA H 1.4		04/04→10/04			MAG44DB	ETS44NDB		ES45NDB
ASTRA H 1.2		08/05→			MAG44DB	ETS44NDB		ES45NDB
ASTRA H 1.4		03/04→			MAG44DB	ETS44NDB		ES45NDB
ASTRA H 1.6 CNG		11/05→			MAG62DB	ETS60NDB-ETS50NDB		ES60NDB
ASTRA H 1.6		03/04→			MAG62DB	ETS60NDB-ETS50NDB		ES60NDB
ASTRA H 1.6		12/06→			MAG62DB	ETS60NDB-ETS50NDB		ES60NDB
ASTRA H 1.6 Turbo		02/07→			MAG62DB	ETS60NDB-ETS50NDB		ES60NDB
ASTRA H 1.8		03/04→			MAG62DB	ETS60NDB-ETS50NDB		ES60NDB
ASTRA H 1.8		01/06→			MAG62DB	ETS60NDB-ETS50NDB		ES60NDB
ASTRA H 2.0 Turbo		03/04→			MAG62DB	ETS60NDB-ETS50NDB		ES60NDB
ASTRA H 2.0 Turbo		09/04→			MAG62DB	ETS60NDB-ETS50NDB		ES60NDB
ASTRA H 2.0 Turbo		03/05→			MAG62DB	ETS60NDB-ETS50NDB		ES60NDB
ASTRA H 1.3 CDTI		08/05→			MAG72DB	ETS71NDB		

	Design		START	RUN	MAGIS	ETS	ETS alternative	ES
OPEL								
ASTRA H 1.7 CDTI		03/04→			MAG62DB	ETS60NDB-ETS50NDB		ES60NDB
ASTRA H 1.7 CDTI		03/04→			MAG62DB	ETS60NDB-ETS50NDB		ES60NDB
ASTRA H 1.7 CDTI		02/07→			MAG62DB	ETS60NDB-ETS50NDB		ES60NDB
ASTRA H 1.7 CDTI		02/07→			MAG62DB	ETS60NDB-ETS50NDB		ES60NDB
ASTRA H 1.9 CDTI		09/05→			MAG72DB	ETS71NDB		
ASTRA H 1.9 CDTI 16V		04/04→			MAG72DB	ETS71NDB		
ASTRA H 1.9 CDTI		06/04→			MAG72DB	ETS71NDB		
ASTRA H 1.9 CDTI		09/04→			MAG72DB	ETS71NDB		
ASTRA H Saloon 1.6		02/07→			MAG62DB	ETS60NDB-ETS50NDB		ES60NDB
ASTRA H Saloon 1.8		02/07→			MAG62DB	ETS60NDB-ETS50NDB		ES60NDB
ASTRA H Saloon 1.3 CDTi		02/07→			MAG62DB	ETS60NDB-ETS50NDB		ES60NDB
ASTRA H Saloon 1.7 CDTi		02/07→			MAG62DB	ETS60NDB-ETS50NDB		ES60NDB
ASTRA H GTC 1.2		10/06→			MAG44DB	ETS44NDB		ES45NDB
ASTRA H GTC 1.4		03/05→			MAG44DB	ETS44NDB		ES45NDB
ASTRA H GTC 1.2		08/05→			MAG44DB	ETS44NDB		ES45NDB
ASTRA H GTC 1.6 CNG		11/05→			MAG62DB	ETS60NDB-ETS50NDB		ES60NDB
ASTRA H GTC 1.6		03/05→			MAG62DB	ETS60NDB-ETS50NDB		ES60NDB
ASTRA H GTC 1.6		12/06→			MAG62DB	ETS60NDB-ETS50NDB		ES60NDB
ASTRA H GTC 1.6 Turbo		02/07→			MAG62DB	ETS60NDB-ETS50NDB		ES60NDB
ASTRA H GTC 1.8		03/05→			MAG62DB	ETS60NDB-ETS50NDB		ES60NDB
ASTRA H GTC 1.8		01/06→			MAG62DB	ETS60NDB-ETS50NDB		ES60NDB
ASTRA H GTC 2.0 Turbo		03/05→			MAG62DB	ETS60NDB-ETS50NDB		ES60NDB
ASTRA H GTC 2.0 Turbo		03/05→			MAG62DB	ETS60NDB-ETS50NDB		ES60NDB
ASTRA H GTC 2.0 Turbo		08/05→			MAG62DB	ETS60NDB-ETS50NDB		ES60NDB
ASTRA H GTC 1.3 CDTI		04/05→			MAG72DB	ETS71NDB		
ASTRA H GTC 1.7 CDTI		03/05→			MAG62DB	ETS60NDB-ETS50NDB		ES60NDB
ASTRA H GTC 1.7 CDTi		03/05→			MAG62DB	ETS60NDB-ETS50NDB		ES60NDB
ASTRA H GTC 1.7 CDTI		02/07→			MAG62DB	ETS60NDB-ETS50NDB		ES60NDB
ASTRA H GTC 1.7 CDTI		02/07→			MAG62DB	ETS60NDB-ETS50NDB		ES60NDB
ASTRA H GTC 1.9 CDTI		01/06→			MAG72DB	ETS71NDB		
ASTRA H GTC 1.9 CDTi 16V		03/05→			MAG72DB	ETS71NDB		
ASTRA H GTC 1.9 CDTI		09/05→			MAG72DB	ETS71NDB		
ASTRA H GTC 1.9 CDTi		03/05→			MAG72DB	ETS71NDB		
ASTRA H Estate 1.4		08/04→			MAG44DB	ETS44NDB		ES45NDB
ASTRA H Estate 1.6		08/04→			MAG62DB	ETS60NDB-ETS50NDB		ES60NDB
ASTRA H Estate 1.6		12/06→			MAG62DB	ETS60NDB-ETS50NDB		ES60NDB
ASTRA H Estate 1.6 Turbo		02/07→			MAG62DB	ETS60NDB-ETS50NDB		ES60NDB
ASTRA H Estate 1.8		08/04→			MAG62DB	ETS60NDB-ETS50NDB		ES60NDB
ASTRA H Estate 1.8		08/05→			MAG62DB	ETS60NDB-ETS50NDB		ES60NDB
ASTRA H Estate 2.0 Turbo		08/04→			MAG62DB	ETS60NDB-ETS50NDB		ES60NDB
ASTRA H Estate 2.0 Turbo		09/04→			MAG62DB	ETS60NDB-ETS50NDB		ES60NDB
ASTRA H Estate 1.3 CDTI		08/05→			MAG72DB	ETS71NDB		
ASTRA H Estate 1.7 CDTI		08/04→			MAG62DB	ETS60NDB-ETS50NDB		ES60NDB
ASTRA H Estate 1.7 CDTI		08/04→			MAG62DB	ETS60NDB-ETS50NDB		ES60NDB
ASTRA H Estate 1.7 CDTI		02/07→			MAG62DB	ETS60NDB-ETS50NDB		ES60NDB
ASTRA H Estate 1.7 CDTI		02/07→			MAG62DB	ETS60NDB-ETS50NDB		ES60NDB
ASTRA H Estate 1.9 CDTI		09/05→			MAG72DB	ETS71NDB		

	Design		START	RUN	MAGIS	ETS	ETS alternative	ES
OPEL								
ASTRA H Estate 1.9 CDTI 16V		08/04→			MAG72DB	ETS71NDB		
ASTRA H Estate 1.9 CDTI		09/05→			MAG72DB	ETS71NDB		
ASTRA H Estate 1.9 CDTI		09/04→			MAG72DB	ETS71NDB		
ASTRA H TwinTop 1.6		09/05→			MAG62DB	ETS60NDB-ETS50NDB		ES60NDB
ASTRA H TwinTop 1.6		12/06→			MAG62DB	ETS60NDB-ETS50NDB		ES60NDB
ASTRA H TwinTop 1.6 Turbo		02/07→			MAG62DB	ETS60NDB-ETS50NDB		ES60NDB
ASTRA H TwinTop 1.8		09/05→			MAG62DB	ETS60NDB-ETS50NDB		ES60NDB
ASTRA H TwinTop 1.8		09/05→			MAG62DB	ETS60NDB-ETS50NDB		ES60NDB
ASTRA H TwinTop 2.0 Turbo		09/05→			MAG62DB	ETS60NDB-ETS50NDB		ES60NDB
ASTRA H TwinTop 2.0 Turbo		09/05→			MAG62DB	ETS60NDB-ETS50NDB		ES60NDB
ASTRA H TwinTop 1.9 CDTi		09/05→			MAG72DB	ETS71NDB		
ASTRA J 1.4 ecoFLEX		12/09→			MAG62DB	ETS60NDB-ETS50NDB		ES60NDB
ASTRA J 1.4 ecoFLEX		12/09→			MAG62DB	ETS60NDB-ETS50NDB		ES60NDB
ASTRA J 1.4 Turbo		12/09→			MAG62DB	ETS60NDB-ETS50NDB		ES60NDB
ASTRA J 1.6		12/09→			MAG62DB	ETS60NDB-ETS50NDB		ES60NDB
ASTRA J 1.6 Turbo		12/09→			MAG62DB	ETS60NDB-ETS50NDB		ES60NDB
ASTRA J 1.3 CDTI ecoFLEX		12/09→			MAG62DB	ETS60NDB-ETS50NDB		ES60NDB
ASTRA J 1.7 CDTI		12/09→			MAG62DB	ETS60NDB-ETS50NDB		ES60NDB
ASTRA J 1.7 CDTI		12/09→			MAG62DB	ETS60NDB-ETS50NDB		ES60NDB
ASTRA J 2.0 CDTI		12/09→			MAG72DB	ETS71NDB		
CALIBRA A 2.0 i	(85_)	06/90→07/97		RUN62D	MAG62D	ETS62ND	ETS60D3N	438320ES
CALIBRA A 2.0 i 4x4	(85_)	06/90→07/97		RUN62D	MAG62D	ETS62ND	ETS60D3N	438320ES
CALIBRA A 2.0 i 16V	(85_)	02/94→07/97		RUN62D	MAG62D	ETS62ND	ETS60D3N	438320ES
CALIBRA A 2.0 i 16V 4x4	(85_)	02/94→07/97		RUN62D	MAG62D	ETS62ND	ETS60D3N	438320ES
CALIBRA A 2.0 i 16V	(85_)	06/90→02/94		RUN62D	MAG62D	ETS62ND	ETS60D3N	438320ES
CALIBRA A 2.0 i 16V 4x4	(85_)	06/90→02/94		RUN62D	MAG62D	ETS62ND	ETS60D3N	438320ES
CALIBRA A 2.0 i Turbo 4x4	(85_)	03/92→07/97		RUN62D	MAG62D	ETS62ND	ETS60D3N	438320ES
CALIBRA A 2.5 i V6	(85_)	04/93→07/97		RUN62D	MAG62D	ETS62ND	ETS60D3N	438320ES
CAMPO 2.3 (TFR16)	(TF_)	08/91→08/94			MAG72DB	ETS71NDB		
CAMPO 2.3 4x4 (TFS16)	(TF_)	08/91→08/94			MAG72DB	ETS71NDB		
CAMPO 2.3 (TFR16)	(TF_)	08/94→09/96			MAG72DB	ETS71NDB		
CAMPO 2.3 4x4 (TFS16)	(TF_)	08/94→09/96			MAG72DB	ETS71NDB		
CAMPO 2.2 D	(TF_)	09/90→08/92			MAG72DB	ETS71NDB		
CAMPO 2.2 D 4x4	(TF_)	09/90→08/92			MAG72DB	ETS71NDB		
CAMPO 2.2 D (TFR52)	(TF_)	08/91→09/96			MAG72DB	ETS71NDB		
CAMPO 2.2 D 4x4 (TFS52)	(TF_)	08/91→09/96			MAG72DB	ETS71NDB		
CAMPO 2.5 D (TFR54)	(TF_)	08/91→06/94			MAG72DB	ETS71NDB		
CAMPO 2.5 D 4x4 (TFS54)	(TF_)	08/91→06/94			MAG72DB	ETS71NDB		
CAMPO 2.5 TD (TFR54)	(TF_)	07/94→			MAG72DB	ETS71NDB		
CAMPO 2.5 TD 4x4 (TFS54)	(TF_)	07/94→			MAG72DB	ETS71NDB		
CAMPO 2.5 DTI	(TF_)	12/01→			MAG72DB	ETS71NDB		
CAMPO 2.5 DTI 4x4	(TF_)	12/01→			MAG72DB	ETS71NDB		
CAMPO 3.1 TD (TFR69)	(TF_)	12/92→			MAG72DB	ETS71NDB		
CAMPO 3.1 TD 4x4 (TFS69)	(TF_)	12/92→			MAG72DB	ETS71NDB		
COMBO 1.2	(71_)	07/94→10/01			MAG44DB	ETS44NDB		ES45NDB
COMBO 1.4	(71_)	07/94→10/01			MAG44DB	ETS44NDB		ES45NDB
COMBO 1.4	(71_)	07/94→10/01			MAG44DB	ETS44NDB		ES45NDB

	Design		START	RUN	MAGIS	ETS	ETS alternative	ES
OPEL								
COMBO 1.4 16V	(71_)	08/99→10/01			MAG44DB	ETS44NDB		ES45NDB
COMBO 1.7 D	(71_)	07/94→10/01			MAG62DB	ETS60NDB-ETS50NDB		ES60NDB
COMBO Tour 1.3 CDTI 16V		10/04→			MAG62DB	ETS60NDB	ETS60D4N	ES60NDB
COMBO Tour 1.3 CDTI 16V		10/05→			MAG62DB	ETS60NDB	ETS60D4N	ES60NDB
COMBO Tour 1.7 DI 16V		10/01→			MAG72DB	ETS71NDB		
COMBO Tour 1.7 DTI 16V		10/01→			MAG72DB	ETS71NDB		
COMBO Tour 1.7 CDTI 16V		12/04→			MAG62DB	ETS60NDB	ETS60D4N	ES60NDB
COMBO Box Body / Estate 1.3 CDTI 16V		08/05→			MAG62DB	ETS60NDB	ETS60D4N	ES60NDB
COMBO Box Body / Estate 1.3 CDTI 16V		10/05→			MAG62DB	ETS60NDB	ETS60D4N	ES60NDB
COMBO Box Body / Estate 1.7 DI 16V		10/01→			MAG72DB	ETS71NDB		
COMBO Box Body / Estate 1.7 DTI 16V		10/01→			MAG72DB	ETS71NDB		
COMBO Box Body / Estate 1.7 CDTI 16V		12/04→			MAG62DB	ETS60NDB	ETS60D4N	ES60NDB
CORSA A Hatchback 1.2 N	(93_, 94_, 98_, 99_)	01/90→03/93			MAG44DB	ETS44NDB		ES45NDB
CORSA A Hatchback 1.4 i	(93_, 94_, 98_, 99_)	01/90→03/93			MAG44DB	ETS44NDB		ES45NDB
CORSA A Hatchback 1.4 S	(93_, 94_, 98_, 99_)	01/90→03/93			MAG44DB	ETS44NDB		ES45NDB
CORSA A Hatchback 1.4 Si	(93_, 94_, 98_, 99_)	09/91→03/93			MAG44DB	ETS44NDB		ES45NDB
CORSA A Hatchback 1.6 GSI CAT	(93_, 94_, 98_, 99_)	02/92→03/93			MAG44DB	ETS44NDB		ES45NDB
CORSA B 1.0 i 12V	(73_, 78_, 79_)	11/96→09/00			MAG44DB	ETS44NDB		ES45NDB
CORSA B 1.2 i	(73_, 78_, 79_)	03/93→09/00			MAG44DB	ETS44NDB		ES45NDB
CORSA B 1.2 i	(73_, 78_, 79_)	03/93→09/00			MAG44DB	ETS44NDB		ES45NDB
CORSA B 1.2 i 16V	(73_, 78_, 79_)	03/98→09/00			MAG44DB	ETS44NDB		ES45NDB
CORSA B 1.4 i	(73_, 78_, 79_)	03/93→09/00			MAG44DB	ETS44NDB		ES45NDB
CORSA B 1.4 Si	(73_, 78_, 79_)	03/93→09/00			MAG44DB	ETS44NDB		ES45NDB
CORSA B 1.4 i 16V	(73_, 78_, 79_)	08/97→09/00			MAG44DB	ETS44NDB		ES45NDB
CORSA B 1.4 i 16V	(73_, 78_, 79_)	09/94→09/00			MAG44DB	ETS44NDB		ES45NDB
CORSA B 1.6 i 16V	(73_, 78_, 79_)	08/97→09/00			MAG44DB	ETS44NDB		ES45NDB
CORSA B 1.6 i 16V	(73_, 78_, 79_)	09/94→09/00			MAG44DB	ETS44NDB		ES45NDB
CORSA B 1.6 GSI 16V	(73_, 78_, 79_)	03/93→09/00			MAG44DB	ETS44NDB		ES45NDB
CORSA B 1.5 D	(73_, 78_, 79_)	03/93→09/00			MAG72DB	ETS71NDB		
CORSA B 1.5 TD	(73_, 78_, 79_)	03/93→09/00			MAG72DB	ETS71NDB		
CORSA B 1.7 D	(73_, 78_, 79_)	02/96→09/00			MAG72DB	ETS71NDB		
CORSA B Box 1.4 i	(73_)	08/99→09/00			MAG44DB	ETS44NDB		ES45NDB
CORSA B Box 1.7 D	(73_)	08/99→09/00			MAG62DB	ETS60NDB-ETS50NDB		ES60NDB
CORSA C 1.8	(F08, F68)	09/00→			MAG62DB	ETS60NDB	ETS60D4N	ES60NDB
CORSA C 1.6	(F08, F68)	08/05→07/06			MAG62DB	ETS60NDB	ETS60D4N	ES60NDB
CORSA C 1.3 CDTI	(F08, F68)	06/03→			MAG62DB	ETS60NDB-ETS50NDB		ES60NDB
CORSA C 1.7 DI	(F08, F68)	09/00→			MAG62DB	ETS60NDB-ETS50NDB		ES60NDB
CORSA C 1.7 DTI	(F08, F68)	09/00→			MAG62DB	ETS60NDB-ETS50NDB		ES60NDB
CORSA C 1.7 CDTI	(F08, F68)	06/03→			MAG62DB	ETS60NDB-ETS50NDB		ES60NDB
CORSA C Box 1.3 CDTI 16V	(F08, W5L)	08/05→			MAG62DB	ETS60NDB	ETS60D4N	ES60NDB
CORSA C Box 1.6	(F08, W5L)	08/05→			MAG62DB	ETS60NDB	ETS60D4N	ES60NDB
CORSA C Box 1.7 DI 16V	(F08, W5L)	09/00→			MAG62DB	ETS60NDB-ETS50NDB		ES60NDB
CORSA C Box 1.7 DTI 16V	(F08, W5L)	09/00→			MAG62DB	ETS60NDB-ETS50NDB		ES60NDB
CORSA C Box 1.7 CDTi	(F08, W5L)	08/03→			MAG62DB	ETS60NDB	ETS60D4N	ES60NDB
CORSA D 1.0		07/06→		RUN50D				
CORSA D 1.2 ecoFLEX		09/09→			MAG62DB	ETS60NDB-ETS50NDB		ES60NDB
CORSA D 1.4 ecoFLEX		09/09→		RUN50D				

	Design		START	RUN	MAGIS	ETS	ETS alternative	ES
OPEL								
CORSA D 1.6 Turbo		02/07→			MAG62DB	ETS60NDB	ETS60D4N	ES60NDB
CORSA D 1.6 Turbo		02/07→			MAG62DB	ETS60NDB	ETS60D4N	ES60NDB
CORSA D 1.3 CDTI		07/06→			MAG72DB	ETS71NDB		
CORSA D 1.3 CDTI		07/06→			MAG72DB	ETS71NDB		
CORSA D 1.7 CDTI		07/06→			MAG72DB	ETS71NDB		
FRONTERA A Sport 2.0 i (52SUD2, 55SUD2)	(5_SUD2)	03/92→10/98		RUN72D				
FRONTERA A Sport 2.5 TDS	(5_SUD2)	09/96→10/98		RUN72D				
FRONTERA A Sport 2.8 TD (53SUD2)	(5_SUD2)	03/95→08/96		RUN72D				
FRONTERA A 2.2 i (54MWL4)	(5_MWL4)	03/95→10/98		RUN72D	MAG74D	ETS74ND	ETS70D1N-ETS74DI	476420ES
FRONTERA A 2.4 i (53MWL4)	(5_MWL4)	03/92→10/98		RUN72D				
FRONTERA A 2.3 TD (5JMWL4)	(5_MWL4)	03/92→10/98		RUN72D				
FRONTERA A 2.5 TDS	(5_MWL4)	09/96→10/98		RUN72D				
FRONTERA A 2.8 TD (5BMWL4)	(5_MWL4)	03/95→10/98		RUN72D				
FRONTERA B 2.2 i (6B_ZC, 6B_VF, 6B_66, 6B_76)	(6B_)	10/98→		RUN62D	MAG62D	ETS62ND	ETS60D3N	438320ES
FRONTERA B 3.2 i (6B1VF, 6B1_6)	(6B_)	10/98→		RUN62D	MAG62D	ETS62ND	ETS60D3N	438320ES
FRONTERA B 2.2 DTI (6B_ZC, 6B_VF, 6B_66, 6B_76)	(6B_)	10/98→09/02		RUN72D				
FRONTERA B 2.2 DTI	(6B_)	09/02→		RUN72D				
GT Convertible 2.0		06/07→			MAG62DB	ETS60NDB	ETS60D4N	ES60NDB
INSIGNIA 1.6		07/08→			MAG62DB	ETS60NDB	ETS60D4N	ES60NDB
INSIGNIA 1.6 Turbo		07/08→			MAG62DB	ETS60NDB	ETS60D4N	ES60NDB
INSIGNIA 1.8		07/08→			MAG62DB	ETS60NDB	ETS60D4N	ES60NDB
INSIGNIA 2.0 Turbo		07/08→			MAG72DB	ETS71NDB		
INSIGNIA 2.0 Turbo 4x4		07/08→			MAG72DB	ETS71NDB		
INSIGNIA 2.8 V6 Turbo 4x4		07/08→			MAG72DB	ETS71NDB		
INSIGNIA 2.8 V6 Turbo 4x4 OPC		07/09→			MAG72DB	ETS71NDB		
INSIGNIA Saloon 1.6		07/08→			MAG62DB	ETS60NDB	ETS60D4N	ES60NDB
INSIGNIA Saloon 1.6 Turbo		01/09→			MAG62DB	ETS60NDB	ETS60D4N	ES60NDB
INSIGNIA Saloon 1.8		07/08→			MAG62DB	ETS60NDB	ETS60D4N	ES60NDB
INSIGNIA Saloon 2.0 Turbo		07/08→			MAG72DB	ETS71NDB		
INSIGNIA Saloon 2.0 Turbo 4x4		07/08→			MAG72DB	ETS71NDB		
INSIGNIA Saloon 2.8 V6 Turbo 4x4		07/08→			MAG72DB	ETS71NDB		
INSIGNIA Saloon 2.8 V6 Turbo 4x4 OPC		07/09→			MAG72DB	ETS71NDB		
INSIGNIA Sports Tourer 1.6		07/08→			MAG62DB	ETS60NDB	ETS60D4N	ES60NDB
INSIGNIA Sports Tourer 1.6 Turbo		01/09→			MAG62DB	ETS60NDB	ETS60D4N	ES60NDB
INSIGNIA Sports Tourer 1.8		07/08→			MAG62DB	ETS60NDB	ETS60D4N	ES60NDB
INSIGNIA Sports Tourer 2.0 Turbo		07/08→			MAG72DB	ETS71NDB		
INSIGNIA Sports Tourer 2.0 Turbo 4x4		07/08→			MAG72DB	ETS71NDB		
INSIGNIA Sports Tourer 2.8 V6 Turbo 4x4		10/08→			MAG72DB	ETS71NDB		
INSIGNIA Sports Tourer 2.8 V6 Turbo 4x4 OPC		07/09→			MAG72DB	ETS71NDB		
KADETT E Hatchback 1.4 i	(33_, 34_, 43_, 44_)	01/90→08/91			MAG44DB	ETS44NDB		ES45NDB
KADETT E Hatchback 1.4 S	(33_, 34_, 43_, 44_)	01/90→08/91			MAG44DB	ETS44NDB		ES45NDB
KADETT E 1.4 i	(39_, 49_)	01/90→08/91			MAG44DB	ETS44NDB		ES45NDB

	Design		START	RUN	MAGIS	ETS	ETS alternative	ES
OPEL								
KADETT E 1.4 S	(39_, 49_)	01/90→08/91			MAG44DB	ETS44NDB		ES45NDB
KADETT E 1.8 i	(39_, 49_)	09/90→08/91			MAG62DB	ETS60NDB	ETS60D4N	ES60NDB
KADETT E Estate 1.4 i	(35_, 36_, 45_, 46_)	01/90→08/91			MAG44DB	ETS44NDB		ES45NDB
KADETT E Estate 1.4 S	(35_, 36_, 45_, 46_)	01/90→08/91			MAG44DB	ETS44NDB		ES45NDB
KADETT E Convertible 1.4 i	(43B_)	01/90→08/91			MAG44DB	ETS44NDB		ES45NDB
KADETT E Convertible 1.4 S	(43B_)	08/90→02/93			MAG44DB	ETS44NDB		ES45NDB
KADETT E Convertible 2.0	(43B_)	09/90→05/92			MAG44DB	ETS44NDB		ES45NDB
KADETT E Convertible 2.0 GSi	(43B_)	09/90→05/92			MAG44DB	ETS44NDB		ES45NDB
KADETT E Box 1.4 i	(37_, 47_)	01/90→08/91			MAG44DB	ETS44NDB		ES45NDB
KADETT E Combo 1.4 i	(38_, 48_)	08/91→07/94			MAG44DB	ETS44NDB		ES45NDB
KADETT E Combo 1.6 i	(38_, 48_)	08/91→07/94			MAG44DB	ETS44NDB		ES45NDB
KADETT E Combo 1.7 D	(38_, 48_)	07/92→07/94			MAG72DB	ETS71NDB		
MERIVA 1.4 16V Twinport		07/04→			MAG62DB	ETS60NDB	ETS60D4N	ES60NDB
MERIVA 1.6		05/03→			MAG62DB	ETS60NDB	ETS60D4N	ES60NDB
MERIVA 1.6 16V		05/03→			MAG62DB	ETS60NDB	ETS60D4N	ES60NDB
MERIVA 1.6		01/06→			MAG62DB	ETS60NDB	ETS60D4N	ES60NDB
MERIVA 1.6 Turbo		09/05→			MAG62DB	ETS60NDB	ETS60D4N	ES60NDB
MERIVA 1.8		05/03→			MAG62DB	ETS60NDB	ETS60D4N	ES60NDB
MERIVA 1.3 CDTI		04/05→			MAG72DB	ETS71NDB		
MERIVA 1.3 CDTI		09/03→			MAG72DB	ETS71NDB		
MERIVA 1.7 DTI		09/03→			MAG72DB	ETS71NDB		
MERIVA 1.7 CDTI		09/03→			MAG72DB	ETS71NDB		
MERIVA 1.7 CDTI		09/06→			MAG72DB	ETS71NDB		
MERIVA 1.4		06/10→			MAG62DB	ETS60NDB	ETS60D4N	ES60NDB
MERIVA 1.4		06/10→			MAG62DB	ETS60NDB	ETS60D4N	ES60NDB
MERIVA 1.7 CDTI		06/10→			MAG72DB	ETS71NDB		
OMEGA A 2.0	(16_, 17_, 19_)	09/90→03/94			MAG62DB	ETS60NDB	ETS60D4N	ES60NDB
OMEGA A 2.0	(16_, 17_, 19_)	09/90→03/94			MAG62DB	ETS60NDB	ETS60D4N	ES60NDB
OMEGA A 2.6 i	(16_, 17_, 19_)	09/90→03/94			MAG62DB	ETS60NDB	ETS60D4N	ES60NDB
OMEGA A 3.0 24V Evolution500	(16_, 17_, 19_)	03/91→07/92			MAG72DB	ETS71NDB		
OMEGA A 3.6 24V Lotus	(16_, 17_, 19_)	08/90→09/92			MAG72DB	ETS71NDB		
OMEGA A Estate 2.0 i	(66_, 67_)	09/90→03/94			MAG62DB	ETS60NDB-ETS50NDB		ES60NDB
OMEGA A Estate 2.0	(66_, 67_)	09/90→03/94			MAG62DB	ETS60NDB-ETS50NDB		ES60NDB
OMEGA A Estate 2.6 i	(66_, 67_)	09/90→03/94			MAG62DB	ETS60NDB-ETS50NDB		ES60NDB
OMEGA B 2.0	(25_, 26_, 27_)	03/94→12/00			MAG62DB	ETS60NDB	ETS60D4N	ES60NDB
OMEGA B 2.0	(25_, 26_, 27_)	03/94→09/99			MAG62DB	ETS60NDB	ETS60D4N	ES60NDB
OMEGA B 2.0 16V	(25_, 26_, 27_)	03/94→09/99			MAG62DB	ETS60NDB	ETS60D4N	ES60NDB
OMEGA B 2.2 16V	(25_, 26_, 27_)	09/99→07/03			MAG62DB	ETS60NDB	ETS60D4N	ES60NDB
OMEGA B 2.5 V6	(25_, 26_, 27_)	03/94→09/00			MAG72DB	ETS71NDB		
OMEGA B 2.6 V6	(25_, 26_, 27_)	09/00→07/03			MAG72DB	ETS71NDB		
OMEGA B 3.0 V6	(25_, 26_, 27_)	04/94→02/01			MAG72DB	ETS71NDB		
OMEGA B 3.2 V6	(25_, 26_, 27_)	02/01→07/03			MAG72DB	ETS71NDB		
OMEGA B 2.0 DTI 16V	(25_, 26_, 27_)	09/97→09/00			MAG72DB	ETS71NDB		
OMEGA B 2.2 DTI 16V	(25_, 26_, 27_)	09/00→07/03			MAG72DB	ETS71NDB		
OMEGA B 2.2 DTI 16V	(25_, 26_, 27_)	09/00→07/03			MAG72DB	ETS71NDB		
OMEGA B Estate 2.0	(21_, 22_, 23_)	03/94→09/99			MAG62DB	ETS60NDB	ETS60D4N	ES60NDB
OMEGA B Estate 2.0 16V	(21_, 22_, 23_)	03/94→09/99			MAG62DB	ETS60NDB	ETS60D4N	ES60NDB

	Design		START	RUN	MAGIS	ETS	ETS alternative	ES
OPEL								
OMEGA B Estate 2.2 16V	(21_, 22_, 23_)	09/99→07/03			MAG62DB	ETS60NDB	ETS60D4N	ES60NDB
OMEGA B Estate 2.5 V6	(21_, 22_, 23_)	03/94→09/00			MAG72DB	ETS71NDB		
OMEGA B Estate 2.6 V6	(21_, 22_, 23_)	09/00→07/03			MAG72DB	ETS71NDB		
OMEGA B Estate 3.0 V6	(21_, 22_, 23_)	04/94→02/01			MAG72DB	ETS71NDB		
OMEGA B Estate 3.2 V6	(21_, 22_, 23_)	02/01→07/03			MAG72DB	ETS71NDB		
OMEGA B Estate 2.0 DTI 16V	(21_, 22_, 23_)	09/97→09/00			MAG72DB	ETS71NDB		
OMEGA B Estate 2.2 DTI 16V	(21_, 22_, 23_)	09/00→07/03			MAG72DB	ETS71NDB		
OMEGA B Estate 2.2 DTI 16V	(21_, 22_, 23_)	09/00→07/03			MAG72DB	ETS71NDB		
SENATOR B 2.5 i	(29_)	09/90→09/93			MAG62DB	ETS60NDB-ETS50NDB		ES60NDB
SENATOR B 2.6 i	(29_)	09/90→09/93			MAG62DB	ETS60NDB-ETS50NDB		ES60NDB
SENATOR B 3.6	(29_)	09/91→08/93			MAG62DB	ETS60NDB-ETS50NDB		ES60NDB
SIGNUM 1.8		09/05→			MAG62DB	ETS60NDB-ETS50NDB		ES60NDB
SIGNUM 1.8		05/03→			MAG62DB	ETS60NDB-ETS50NDB		ES60NDB
SIGNUM 2.0 Turbo		05/03→			MAG72DB	ETS71NDB		
SIGNUM 2.2 direct		05/03→			MAG72DB	ETS71NDB		
SIGNUM 2.8 V6 Turbo		09/05→			MAG72DB	ETS71NDB		
SIGNUM 2.8 V6 Turbo		01/06→			MAG72DB	ETS71NDB		
SIGNUM 3.2 V6		05/03→			MAG72DB	ETS71NDB		
SIGNUM 1.9 CDTI		08/05→			MAG72DB	ETS71NDB		
SIGNUM 1.9 CDTI		04/04→			MAG72DB	ETS71NDB		
SIGNUM 1.9 CDTI		04/04→			MAG72DB	ETS71NDB		
SIGNUM 2.0 DTI		05/03→			MAG72DB	ETS71NDB		
SIGNUM 2.2 DTI		05/03→			MAG72DB	ETS71NDB		
SIGNUM 3.0 V6 CDTI		05/03→			MAG88DB	ETS85NDB	ETS88D1N	ES90NDB
SIGNUM 3.0 V6 CDTI		09/05→			MAG88DB	ETS85NDB	ETS88D1N	ES90NDB
SINTRA 2.2 i 16V		11/96→04/99			MAG62DB	ETS60NDB-ETS50NDB		ES60NDB
SINTRA 3.0 i 24V		11/96→04/99			MAG62DB	ETS60NDB-ETS50NDB		ES60NDB
SINTRA 2.2 DTI		07/97→04/99			MAG72DB	ETS71NDB		
SPEEDSTER 2.0 Turbo		04/03→			MAG62DB	ETS60NDB-ETS50NDB		ES60NDB
SPEEDSTER 2.0		10/03→08/06			MAG62DB	ETS60NDB-ETS50NDB		ES60NDB
SPEEDSTER 2.2		09/00→			MAG62DB	ETS60NDB-ETS50NDB		ES60NDB
TIGRA 1.4 16V	(95_)	08/97→12/00			MAG44DB	ETS44NDB		ES45NDB
TIGRA 1.4 16V	(95_)	07/94→12/00			MAG44DB	ETS44NDB		ES45NDB
TIGRA 1.6 16V	(95_)	08/97→08/98			MAG44DB	ETS44NDB		ES45NDB
TIGRA 1.6 16V	(95_)	07/94→08/98			MAG44DB	ETS44NDB		ES45NDB
TIGRA TwinTop 1.4		06/04→			MAG44DB	ETS44NDB		ES45NDB
TIGRA TwinTop 1.8		06/04→			MAG62DB	ETS60NDB-ETS50NDB		ES60NDB
TIGRA TwinTop 1.3 CDTI		06/04→			MAG62DB	ETS60NDB-ETS50NDB		ES60NDB
VECTRA A Hatchback 1.6	(88_, 89_)	08/92→07/93			MAG44DB	ETS44NDB		ES45NDB
VECTRA A Hatchback 1.6 i	(88_, 89_)	09/93→11/95		RUN50D	MAG50D-MAG45D	ETS50ND-ETS45ND	ETS50D3N-ETS50D4N	436210ES
VECTRA A Hatchback 1.6 i	(88_, 89_)	09/93→11/95		RUN50D	MAG50D-MAG45D	ETS50ND-ETS45ND	ETS50D3N-ETS50D4N	436210ES
VECTRA A Hatchback 1.8 i CAT	(88_, 89_)	03/90→11/95		RUN50D	MAG50D-MAG45D	ETS50ND-ETS45ND	ETS50D3N-ETS50D4N	436210ES
VECTRA A Hatchback 2.0 i 16V	(88_, 89_)	06/94→11/95		RUN50D	MAG50D-MAG45D	ETS50ND-ETS45ND	ETS50D3N-ETS50D4N	436210ES
VECTRA A Hatchback 2.0 i 16V CAT	(88_, 89_)	02/90→11/95		RUN50D	MAG50D-MAG45D	ETS50ND-ETS45ND	ETS50D3N-ETS50D4N	436210ES
VECTRA A Hatchback 2.5 V6	(88_, 89_)	02/93→11/95			MAG62DB	ETS60NDB-ETS50NDB		ES60NDB
VECTRA A Hatchback 1.7 D	(88_, 89_)	07/92→11/95			MAG72DB	ETS71NDB-ETS65NDB		ES70NDB
VECTRA A Hatchback 1.7 TD	(88_, 89_)	03/90→11/95			MAG72DB	ETS71NDB		

	Design		START	RUN	MAGIS	ETS	ETS alternative	ES
OPEL								
VECTRA A 1.6	(86_, 87_)	08/92→07/93			MAG44DB	ETS44NDB		ES45NDB
VECTRA A 1.6 i	(86_, 87_)	09/93→11/95			MAG44DB	ETS44NDB		ES45NDB
VECTRA A 1.6 i	(86_, 87_)	09/93→11/95			MAG44DB	ETS44NDB		ES45NDB
VECTRA A 1.6	(86_, 87_)	08/92→06/94		RUN50D	MAG50D	ETS50ND	ETS50D3N-ETS50D4N	
VECTRA A 1.8 i CAT	(86_, 87_)	03/90→11/95			MAG44DB	ETS44NDB		ES45NDB
VECTRA A 2.0 i 16V	(86_, 87_)	06/94→11/95		RUN50D	MAG50D-MAG45D	ETS50ND-ETS45ND	ETS50D3N-ETS50D4N	436210ES
VECTRA A 2.0 i 16V 4x4	(86_, 87_)	06/94→11/95		RUN50D	MAG50D-MAG45D	ETS50ND-ETS45ND	ETS50D3N-ETS50D4N	436210ES
VECTRA A 2000/GT 16V CAT	(86_, 87_)	02/90→11/95			MAG62DB	ETS60NDB-ETS50NDB		ES60NDB
VECTRA A 2000/GT 16V 4x4 CAT	(86_, 87_)	02/90→11/95			MAG62DB	ETS60NDB-ETS50NDB		ES60NDB
VECTRA A 2.0 i Turbo 4x4	(86_, 87_)	06/94→11/95			MAG62DB	ETS60NDB-ETS50NDB		ES60NDB
VECTRA A 2.5 V6	(86_, 87_)	02/93→11/95			MAG62DB	ETS60NDB-ETS50NDB		ES60NDB
VECTRA A 1.7 D	(86_, 87_)	07/92→11/95			MAG72DB	ETS71NDB		
VECTRA A 1.7 TD	(86_, 87_)	03/90→11/95			MAG72DB	ETS71NDB		
VECTRA B Hatchback 1.6 i	(38_)	10/95→07/03			MAG44DB	ETS44NDB		ES45NDB
VECTRA B Hatchback 1.6 i	(38_)	10/95→07/03			MAG44DB	ETS44NDB		ES45NDB
VECTRA B Hatchback 1.6 i 16V	(38_)	10/95→07/02			MAG44DB	ETS44NDB		ES45NDB
VECTRA B Hatchback 1.8 i 16V	(38_)	10/95→09/00			MAG44DB	ETS44NDB		ES45NDB
VECTRA B Hatchback 2.0 i	(38_)	10/95→02/02			MAG62DB	ETS60NDB-ETS50NDB		ES60NDB
VECTRA B Hatchback 2.0 i 16V	(38_)	10/95→09/00			MAG62DB	ETS60NDB-ETS50NDB		ES60NDB
VECTRA B Hatchback 2.2 i 16V	(38_)	09/00→07/03			MAG62DB	ETS60NDB-ETS50NDB		ES60NDB
VECTRA B Hatchback 2.5 i V6	(38_)	10/95→09/00			MAG62DB	ETS60NDB-ETS50NDB		ES60NDB
VECTRA B Hatchback 2.5	(38_)	10/99→06/00			MAG62DB	ETS60NDB-ETS50NDB		ES60NDB
VECTRA B Hatchback 2.6 i V6	(38_)	09/00→07/03			MAG62DB	ETS60NDB-ETS50NDB		ES60NDB
VECTRA B Hatchback 1.7 TD	(38_)	10/95→12/98			MAG72DB	ETS71NDB		
VECTRA B Hatchback 2.0 DI 16V	(38_)	11/96→06/00			MAG72DB	ETS71NDB		
VECTRA B Hatchback 2.0 DTI 16V	(38_)	06/97→07/03			MAG72DB	ETS71NDB		
VECTRA B Hatchback 2.2 DTI 16V	(38_)	09/00→07/03			MAG74D	ETS74ND	ETS70D1N-ETS74DI	476420ES
VECTRA B 1.6 i	(36_)	10/95→04/02			MAG44DB	ETS44NDB		ES45NDB
VECTRA B 1.6 i	(36_)	10/95→04/02			MAG44DB	ETS44NDB		ES45NDB
VECTRA B 1.6 i 16V	(36_)	10/95→04/02			MAG44DB	ETS44NDB		ES45NDB
VECTRA B 1.8 i 16V	(36_)	10/95→09/00			MAG44DB	ETS44NDB		ES45NDB
VECTRA B 1.8 i 16V	(36_)	09/00→04/02			MAG62DB	ETS60NDB-ETS50NDB		ES60NDB
VECTRA B 2.0 i	(36_)	10/95→04/02			MAG62DB	ETS60NDB-ETS50NDB		ES60NDB
VECTRA B 2.0 i 16V	(36_)	10/95→09/00			MAG62DB	ETS60NDB-ETS50NDB		ES60NDB
VECTRA B 2.2 i 16V	(36_)	09/00→04/02			MAG62DB	ETS60NDB-ETS50NDB		ES60NDB
VECTRA B 2.5 i V6	(36_)	10/95→09/00			MAG62DB	ETS60NDB-ETS50NDB		ES60NDB
VECTRA B 2.6 i V6	(36_)	09/00→04/02			MAG62DB	ETS60NDB-ETS50NDB		ES60NDB
VECTRA B i 500 2.5	(36_)	05/98→09/00			MAG62DB	ETS60NDB-ETS50NDB		ES60NDB
VECTRA B 1.7 TD	(36_)	10/95→12/98			MAG72DB	ETS71NDB		
VECTRA B 2.0 DI 16V	(36_)	11/96→04/02			MAG72DB	ETS71NDB		
VECTRA B 2.0 DTI 16V	(36_)	06/97→04/02			MAG72DB	ETS71NDB		
VECTRA B 2.2 DTI 16V	(36_)	09/00→04/02			MAG74D	ETS74ND	ETS70D1N-ETS74DI	476420ES
VECTRA B Estate 1.6 i	(31_)	11/96→06/00			MAG44DB	ETS44NDB		ES45NDB
VECTRA B Estate 1.6 i	(31_)	11/96→06/00			MAG44DB	ETS44NDB		ES45NDB
VECTRA B Estate 1.6 i 16V	(31_)	11/96→07/02			MAG44DB	ETS44NDB		ES45NDB
VECTRA B Estate 1.8 i 16V	(31_)	11/96→09/00			MAG44DB	ETS44NDB		ES45NDB
VECTRA B Estate 1.8 i 16V	(31_)	09/00→07/03			MAG62DB	ETS60NDB-ETS50NDB		ES60NDB

	Design		START	RUN	MAGIS	ETS	ETS alternative	ES
OPEL								
VECTRA B Estate 2.0 i	(31_)	11/96→02/02			MAG62DB	ETS60NDB-ETS50NDB		ES60NDB
VECTRA B Estate 2.0 i 16V	(31_)	11/96→09/00			MAG62DB	ETS60NDB-ETS50NDB		ES60NDB
VECTRA B Estate 2.2 i 16V	(31_)	09/00→07/03			MAG62DB	ETS60NDB-ETS50NDB		ES60NDB
VECTRA B Estate 2.5 i V6	(31_)	11/96→09/00			MAG62DB	ETS60NDB-ETS50NDB		ES60NDB
VECTRA B Estate 2.6 i V6	(31_)	09/00→07/03			MAG62DB	ETS60NDB-ETS50NDB		ES60NDB
VECTRA B Estate i 500 2.5	(31_)	05/98→09/00			MAG62DB	ETS60NDB-ETS50NDB		ES60NDB
VECTRA B Estate 1.7 TD	(31_)	11/96→12/97			MAG72DB	ETS71NDB		
VECTRA B Estate 2.0 DI 16V	(31_)	11/96→06/00			MAG72DB	ETS71NDB		
VECTRA B Estate 2.0 DTI 16V	(31_)	06/97→07/03			MAG72DB	ETS71NDB		
VECTRA B Estate 2.2 DTI 16V	(31_)	09/00→07/03			MAG72DB	ETS71NDB		
VECTRA C GTS 1.6		08/05→			MAG62DB	ETS60NDB-ETS50NDB		ES60NDB
VECTRA C GTS 1.6		01/06→			MAG62DB	ETS60NDB-ETS50NDB		ES60NDB
VECTRA C GTS 1.8 16V		08/02→		RUN62D	MAG62D	ETS62ND	ETS60D3N	438320ES
VECTRA C GTS 1.8		01/06→		RUN62D	MAG62D	ETS62ND	ETS60D3N	438320ES
VECTRA C GTS 2.0 16V Turbo		03/03→		RUN62D	MAG62D	ETS62ND	ETS60D3N	438320ES
VECTRA C GTS 2.2 16V		08/02→			MAG72DB	ETS71NDB		
VECTRA C GTS 2.2 direct		10/03→			MAG72DB	ETS71NDB		
VECTRA C GTS 2.8 V6 Turbo		08/05→			MAG72DB	ETS71NDB		
VECTRA C GTS 2.8 V6 Turbo		08/06→			MAG72DB	ETS71NDB		
VECTRA C GTS 2.8 V6 Turbo		08/05→			MAG72DB	ETS71NDB		
VECTRA C GTS 2.8 V6 Turbo		08/06→			MAG72DB	ETS71NDB		
VECTRA C GTS 3.2 V6		08/02→		RUN72D	MAG74D	ETS74ND	ETS70D1N-ETS74DI	476420ES
VECTRA C GTS 1.9 CDTI		10/05→			MAG72DB	ETS71NDB		
VECTRA C GTS 1.9 CDTI		04/04→			MAG72DB	ETS71NDB		
VECTRA C GTS 1.9 CDTI		04/04→			MAG72DB	ETS71NDB		
VECTRA C GTS 2.0 DTI 16V		08/02→			MAG72DB	ETS71NDB		
VECTRA C GTS 2.2 DTI 16V		08/02→			MAG72DB	ETS71NDB		
VECTRA C GTS 3.0 CDTi		08/05→			MAG72DB	ETS71NDB		
VECTRA C 1.6 16V		06/04→		RUN62D	MAG62D	ETS62ND	ETS60D3N	438320ES
VECTRA C 1.6		01/06→		RUN62D	MAG62D	ETS62ND	ETS60D3N	438320ES
VECTRA C 1.8		04/02→		RUN62D	MAG62D	ETS62ND	ETS60D3N	438320ES
VECTRA C 1.8		01/06→		RUN62D	MAG62D	ETS62ND	ETS60D3N	438320ES
VECTRA C 1.8 16V		04/02→		RUN62D	MAG62D	ETS62ND	ETS60D3N	438320ES
VECTRA C 2.0 16V Turbo		03/03→			MAG72DB	ETS71NDB		
VECTRA C 2.2 16V		04/02→			MAG72DB	ETS71NDB		
VECTRA C 2.2 direct		10/03→		RUN62D	MAG62D	ETS62ND	ETS60D3N	438320ES
VECTRA C 2.8 V6 Turbo		08/05→			MAG72DB	ETS71NDB		
VECTRA C 2.8 V6 Turbo		08/06→			MAG72DB	ETS71NDB		
VECTRA C 2.8 V6 Turbo		08/05→			MAG72DB	ETS71NDB		
VECTRA C 3.2 V6		08/02→		RUN72D	MAG74D	ETS74ND	ETS70D1N-ETS74DI	476420ES
VECTRA C 1.9 CDTI		10/05→			MAG72DB	ETS71NDB		
VECTRA C 1.9 CDTI		04/04→			MAG72DB	ETS71NDB		
VECTRA C 1.9 CDTI		04/04→			MAG72DB	ETS71NDB		
VECTRA C 2.0 DTI 16V		04/02→			MAG72DB	ETS71NDB		
VECTRA C 2.2 DTI 16V		04/02→			MAG72DB	ETS71NDB		
VECTRA C 3.0 CDTI		06/03→			MAG72DB	ETS71NDB		
VECTRA C 3.0 CDTi		08/05→			MAG72DB	ETS71NDB		

	Design		START	RUN	MAGIS	ETS	ETS alternative	ES
OPEL								
VECTRA C Estate 1.6 16V		06/04→		RUN62D	MAG62D	ETS62ND	ETS60D3N	438320ES
VECTRA C Estate 1.6		01/06→		RUN62D	MAG62D	ETS62ND	ETS60D3N	438320ES
VECTRA C Estate 1.8		10/03→		RUN62D	MAG62D	ETS62ND	ETS60D3N	438320ES
VECTRA C Estate 1.8		01/06→		RUN62D	MAG62D	ETS62ND	ETS60D3N	438320ES
VECTRA C Estate 2.0 Turbo		10/03→		RUN62D	MAG62D	ETS62ND	ETS60D3N	438320ES
VECTRA C Estate 2.2 direct		10/03→		RUN62D	MAG62D	ETS62ND	ETS60D3N	438320ES
VECTRA C Estate 2.8 V6 Turbo		08/05→			MAG72DB	ETS71NDB		
VECTRA C Estate 2.8 V6 Turbo		01/07→			MAG72DB	ETS71NDB		
VECTRA C Estate 2.8 V6 Turbo		08/05→			MAG72DB	ETS71NDB		
VECTRA C Estate 2.8 V6 Turbo		01/07→			MAG72DB	ETS71NDB		
VECTRA C Estate 3.2 V6		10/03→		RUN72D	MAG74D	ETS74ND	ETS70D1N-ETS74DI	476420ES
VECTRA C Estate 1.9 CDTI		10/05→			MAG72DB	ETS71NDB		
VECTRA C Estate 1.9 CDTI		04/04→			MAG72DB	ETS71NDB		
VECTRA C Estate 1.9 CDTI		04/04→			MAG72DB	ETS71NDB		
VECTRA C Estate 2.0 DTI		10/03→			MAG72DB	ETS71NDB		
VECTRA C Estate 2.2 DTI		10/03→			MAG72DB	ETS71NDB		
VECTRA C Estate 3.0 V6 CDTI		10/03→			MAG72DB	ETS71NDB		
ZAFIRA 1.6 CNG	(F75_)	09/01→06/05			MAG44DB	ETS44NDB		ES45NDB
ZAFIRA 1.6 16V	(F75_)	04/99→06/05			MAG44DB	ETS44NDB		ES45NDB
ZAFIRA 1.8 16V	(F75_)	04/99→09/00			MAG44DB	ETS44NDB		ES45NDB
ZAFIRA 1.8 16V	(F75_)	09/00→06/05			MAG44DB	ETS44NDB		ES45NDB
ZAFIRA 2.0 OPC	(F75_)	09/01→06/05			MAG62DB	ETS60NDB-ETS50NDB		ES60NDB
ZAFIRA 2.0 OPC	(F75_)	11/02→06/05			MAG62DB	ETS60NDB-ETS50NDB		ES60NDB
ZAFIRA 2.2 16V	(F75_)	09/00→06/05			MAG62DB	ETS60NDB-ETS50NDB		ES60NDB
ZAFIRA 2.0 DI 16V	(F75_)	10/99→06/05			MAG72DB	ETS71NDB		
ZAFIRA 2.0 DTI 16V	(F75_)	09/00→06/05			MAG72DB	ETS71NDB		
ZAFIRA 2.2 DTI 16V	(F75_)	01/02→06/05			MAG72DB	ETS71NDB		
ZAFIRA 1.6		01/06→			MAG44DB	ETS44NDB		ES45NDB
ZAFIRA 1.6		07/05→			MAG44DB	ETS44NDB		ES45NDB
ZAFIRA 1.6		01/08→			MAG44DB	ETS44NDB		ES45NDB
ZAFIRA 1.6 CNG Turbo		02/09→			MAG44DB	ETS44NDB		ES45NDB
ZAFIRA 1.8		07/05→			MAG44DB	ETS44NDB		ES45NDB
ZAFIRA 2.0		07/05→			MAG62DB	ETS60NDB-ETS50NDB		ES60NDB
ZAFIRA 2.0		01/06→			MAG62DB	ETS60NDB-ETS50NDB		ES60NDB
ZAFIRA 2.2		07/05→			MAG62DB	ETS60NDB-ETS50NDB		ES60NDB
ZAFIRA 1.7 CDTI		01/08→		RUN62D	MAG62D	ETS62ND	ETS60D3N	438320ES
ZAFIRA 1.7 CDTI		01/08→		RUN62D	MAG62D	ETS62ND	ETS60D3N	438320ES
ZAFIRA 1.9 CDTI		07/05→			MAG62DB	ETS60NDB-ETS50NDB		ES60NDB
ZAFIRA 1.9 CDTI		07/05→			MAG62DB	ETS60NDB-ETS50NDB		ES60NDB
ZAFIRA 1.9 CDTI		07/05→			MAG62DB	ETS60NDB-ETS50NDB		ES60NDB
ARENA Combi 1.9 D	(THB)	03/98→08/01		RUN72D	MAG74D	ETS74ND	ETS70D1N-ETS74DI	476420ES
ARENA Combi 2.5 D	(THB)	03/98→08/01		RUN72D	MAG74D	ETS74ND	ETS70D1N-ETS74DI	476420ES
ARENA Box 1.9 D	(TB, TF)	03/98→08/01		RUN72D	MAG74D	ETS74ND	ETS70D1N-ETS74DI	476420ES
ARENA Box 2.5 D	(TB, TF)	03/98→08/01		RUN72D	MAG74D	ETS74ND	ETS70D1N-ETS74DI	476420ES
MOVANO Combi 1.9 DTI	(J9)	09/00→10/01		RUN95D		ETS92ND-ETS95D1N		434440ES
MOVANO Combi 1.9 DTI	(J9)	10/01→		RUN95D		ETS92ND-ETS95D1N		434440ES
MOVANO Combi 2.2 DTI	(J9)	09/00→		RUN95D		ETS92ND-ETS95D1N		434440ES

	Design		START	RUN	MAGIS	ETS	ETS alternative	ES
OPEL								
MOVANO Combi 2.5 CDTI	(J9)	09/07→		RUN95D		ETS92ND-ETS95D1N		434440ES
MOVANO Combi 2.5 DTI	(J9)	10/01→		RUN95D		ETS92ND-ETS95D1N		434440ES
MOVANO Combi 2.5 CDTI	(J9)	08/06→		RUN95D		ETS92ND-ETS95D1N		434440ES
MOVANO Combi 2.5 CDTI	(J9)	08/06→		RUN95D		ETS92ND-ETS95D1N		434440ES
MOVANO Combi 2.5 D	(J9)	07/98→09/00		RUN95D		ETS92ND-ETS95D1N		434440ES
MOVANO Combi 2.8 DTI	(J9)	07/98→10/01		RUN95D		ETS92ND-ETS95D1N		434440ES
MOVANO Combi 3.0 DTi	(J9)	10/03→		RUN95D		ETS92ND-ETS95D1N		434440ES
MOVANO Box 1.9 DTI	(F9)	09/00→10/01		RUN95D		ETS92ND-ETS95D1N		434440ES
MOVANO Box 1.9 DTI	(F9)	10/01→		RUN95D		ETS92ND-ETS95D1N		434440ES
MOVANO Box 2.2 DTI	(F9)	09/00→		RUN95D		ETS92ND-ETS95D1N		434440ES
MOVANO Box 2.5 DTi	(F9)	10/03→		RUN95D		ETS92ND-ETS95D1N		434440ES
MOVANO Box 2.5 DTI	(F9)	10/01→		RUN95D		ETS92ND-ETS95D1N		434440ES
MOVANO Box 2.5 CDTI	(F9)	08/06→		RUN95D		ETS92ND-ETS95D1N		434440ES
MOVANO Box 2.5 CDTI	(F9)	08/06→		RUN95D		ETS92ND-ETS95D1N		434440ES
MOVANO Box 2.5 D	(F9)	01/99→09/00		RUN95D		ETS92ND-ETS95D1N		434440ES
MOVANO Box 2.5 CDTI	(F9)	08/06→		RUN95D		ETS92ND-ETS95D1N		434440ES
MOVANO Box 2.8 DTI	(F9)	01/99→10/01		RUN95D		ETS92ND-ETS95D1N		434440ES
MOVANO Box 3.0 DTI	(F9)	10/03→		RUN95D		ETS92ND-ETS95D1N		434440ES
MOVANO Flatbed / Chassis 2.2 DTI	(U9, E9)	09/00→		RUN95D		ETS92ND-ETS95D1N		434440ES
MOVANO Flatbed / Chassis 2.5 DTi	(U9, E9)	10/03→		RUN95D		ETS92ND-ETS95D1N		434440ES
MOVANO Flatbed / Chassis 2.5 DTI	(U9, E9)	10/01→		RUN95D		ETS92ND-ETS95D1N		434440ES
MOVANO Flatbed / Chassis 2.5 CDTI	(U9, E9)	08/06→		RUN95D		ETS92ND-ETS95D1N		434440ES
MOVANO Flatbed / Chassis 2.5 CDTI	(U9, E9)	08/06→		RUN95D		ETS92ND-ETS95D1N		434440ES
MOVANO Flatbed / Chassis 2.5 D	(U9, E9)	07/98→09/00		RUN95D		ETS92ND-ETS95D1N		434440ES
MOVANO Flatbed / Chassis 2.5 CDTI	(U9, E9)	08/06→		RUN95D		ETS92ND-ETS95D1N		434440ES
MOVANO Flatbed / Chassis 2.8 DTI	(U9, E9)	07/98→10/01		RUN95D		ETS92ND-ETS95D1N		434440ES
MOVANO Flatbed / Chassis 3.0 DTI	(U9, E9)	10/03→		RUN95D		ETS92ND-ETS95D1N		434440ES
MOVANO Dumptruck 2.2 DTI	(H9)	09/00→		RUN95D		ETS92ND-ETS95D1N		434440ES
MOVANO Dumptruck 2.5 D	(H9)	01/99→09/00		RUN95D		ETS92ND-ETS95D1N		434440ES
MOVANO Dumptruck 2.5 DTi	(H9)	10/03→		RUN95D		ETS92ND-ETS95D1N		434440ES
MOVANO Dumptruck 2.5 CDTI	(H9)	08/06→		RUN95D		ETS92ND-ETS95D1N		434440ES
MOVANO Dumptruck 2.5 CDTI	(H9)	08/06→		RUN95D		ETS92ND-ETS95D1N		434440ES
MOVANO Dumptruck 2.5 CDTI	(H9)	08/06→		RUN95D		ETS92ND-ETS95D1N		434440ES
MOVANO Dumptruck 2.8 DTI	(H9)	01/99→10/01		RUN95D		ETS92ND-ETS95D1N		434440ES
VIVARO Combi 2.0 ECOTEC	(J7)	08/06→		RUN72D	MAG74D	ETS74ND	ETS70D1N-ETS74DI	476420ES
VIVARO Combi 2.0 16V	(J7)	08/01→		RUN72D	MAG74D	ETS74ND	ETS70D1N-ETS74DI	476420ES
VIVARO Combi 1.9 DI	(J7)	08/01→		RUN72D	MAG74D	ETS74ND	ETS70D1N-ETS74DI	476420ES
VIVARO Combi 1.9 DTI	(J7)	08/01→		RUN72D	MAG74D	ETS74ND	ETS70D1N-ETS74DI	476420ES
VIVARO Combi 2.0 CDTI	(J7)	08/06→		RUN72D	MAG74D	ETS74ND	ETS70D1N-ETS74DI	476420ES
VIVARO Combi 2.0 CDTI	(J7)	08/06→		RUN72D	MAG74D	ETS74ND	ETS70D1N-ETS74DI	476420ES
VIVARO Combi 2.5 DTI	(J7)	05/03→		RUN72D	MAG74D	ETS74ND	ETS70D1N-ETS74DI	476420ES
VIVARO Combi 2.5 CDTI	(J7)	08/06→		RUN72D	MAG74D	ETS74ND	ETS70D1N-ETS74DI	476420ES
VIVARO Combi 2.5 CDTI	(J7)	08/06→		RUN72D	MAG74D	ETS74ND	ETS70D1N-ETS74DI	476420ES
VIVARO Box 2.0 ECOTEC	(F7)	08/06→		RUN72D	MAG74D	ETS74ND	ETS70D1N-ETS74DI	476420ES
VIVARO Box 2.0 16V	(F7)	08/01→		RUN72D	MAG74D	ETS74ND	ETS70D1N-ETS74DI	476420ES
VIVARO Box 1.9 DI	(F7)	08/01→		RUN72D	MAG74D	ETS74ND	ETS70D1N-ETS74DI	476420ES
VIVARO Box 1.9 DTI	(F7)	08/01→		RUN72D	MAG74D	ETS74ND	ETS70D1N-ETS74DI	476420ES

	Design		START	RUN	MAGIS	ETS	ETS alternative	ES
OPEL								
VIVARO Box 2.0 CDTI	(F7)	08/06→		RUN72D	MAG74D	ETS74ND	ETS70D1N-ETS74DI	476420ES
VIVARO Box 2.0 CDTI	(F7)	08/06→		RUN72D	MAG74D	ETS74ND	ETS70D1N-ETS74DI	476420ES
VIVARO Box 2.5 DTI	(F7)	05/03→		RUN72D	MAG74D	ETS74ND	ETS70D1N-ETS74DI	476420ES
VIVARO Box 2.5 CDTI	(F7)	08/06→		RUN72D	MAG74D	ETS74ND	ETS70D1N-ETS74DI	476420ES
VIVARO Box 2.5 CDTI	(F7)	08/06→		RUN72D	MAG74D	ETS74ND	ETS70D1N-ETS74DI	476420ES
VIVARO Flatbed / Chassis 2.0 ECOTEC	(E7)	08/06→		RUN72D	MAG74D	ETS74ND	ETS70D1N-ETS74DI	476420ES
VIVARO Flatbed / Chassis 2.0 16V	(E7)	08/06→		RUN72D	MAG74D	ETS74ND	ETS70D1N-ETS74DI	476420ES
VIVARO Flatbed / Chassis 1.9 DTI	(E7)	08/06→		RUN72D	MAG74D	ETS74ND	ETS70D1N-ETS74DI	476420ES
VIVARO Flatbed / Chassis 2.0 CDTI	(E7)	01/06→		RUN72D	MAG74D	ETS74ND	ETS70D1N-ETS74DI	476420ES
VIVARO Flatbed / Chassis 2.0 CDTI	(E7)	08/06→		RUN72D	MAG74D	ETS74ND	ETS70D1N-ETS74DI	476420ES
VIVARO Flatbed / Chassis 2.5 CDTI	(E7)	08/06→		RUN72D	MAG74D	ETS74ND	ETS70D1N-ETS74DI	476420ES
VIVARO Flatbed / Chassis 2.5 CDTI	(E7)	08/06→		RUN72D	MAG74D	ETS74ND	ETS70D1N-ETS74DI	476420ES
OSCA 2500 GT 2.5		10/99→		RUN62D	MAG62D	ETS62ND	ETS60D3N	438320ES
PERODUA								
KENARI 1.0	(L9_)	10/00→						ES35240DJ
KELISA 0.8	(L7_)	05/04→06/07						ES35240DJ
KELISA 1.0 DVVT	(L7_)	02/02→						ES35240DJ
MYVI 1.3		01/06→						ES35240DJ
PEUGEOT								
106 I 1.0	(1A, 1C)	09/91→04/96		RUN50D	MAG50D	ETS50ND	ETS50D3N-ETS50D4N	
106 I 1.0	(1A, 1C)	09/91→04/96		RUN50D	MAG50D	ETS50ND	ETS50D3N-ETS50D4N	
106 I 1.1	(1A, 1C)	09/91→04/96		RUN50D	MAG50D	ETS50ND	ETS50D3N-ETS50D4N	
106 I 1.3	(1A, 1C)	10/93→04/96		RUN50D	MAG50D-MAG45D	ETS50ND-ETS45ND	ETS50D3N-ETS50D4N	436210ES
106 I 1.4	(1A, 1C)	08/91→03/96		RUN50D	MAG50D-MAG45D	ETS50ND-ETS45ND	ETS50D3N-ETS50D4N	436210ES
106 I 1.4	(1A, 1C)	09/91→04/96		RUN50D	MAG50D-MAG45D	ETS50ND-ETS45ND	ETS50D3N-ETS50D4N	436210ES
106 I 1.4	(1A, 1C)	09/91→04/96		RUN50D	MAG50D-MAG45D	ETS50ND-ETS45ND	ETS50D3N-ETS50D4N	436210ES
106 I 1.6	(1A, 1C)	06/93→04/96		RUN50D	MAG50D-MAG45D	ETS50ND-ETS45ND	ETS50D3N-ETS50D4N	436210ES
106 I 1.6	(1A, 1C)	01/94→04/96		RUN50D	MAG50D-MAG45D	ETS50ND-ETS45ND	ETS50D3N-ETS50D4N	436210ES
106 I 1.4 D	(1A, 1C)	09/92→04/96		RUN62D	MAG62D	ETS62ND	ETS60D3N	438320ES
106 I 1.5 D	(1A, 1C)	06/94→04/96		RUN62D	MAG62D	ETS62ND	ETS60D3N	438320ES
106 I 1.5 D	(1A, 1C)	06/94→04/96		RUN62D	MAG62D	ETS62ND	ETS60D3N	438320ES
106 II 1.0 i	(1)	05/96→		RUN50D	MAG50D	ETS50ND	ETS50D3N-ETS50D4N	
106 II 1.0 i	(1)	01/97→		RUN50D	MAG50D	ETS50ND	ETS50D3N-ETS50D4N	
106 II 1.1 i	(1)	01/97→		RUN50D	MAG50D	ETS50ND	ETS50D3N-ETS50D4N	
106 II 1.1	(1)	09/00→10/02		RUN50D	MAG50D-MAG45D	ETS50ND-ETS45ND	ETS50D3N-ETS50D4N	436210ES
106 II 1.1 i	(1)	05/96→		RUN50D	MAG50D	ETS50ND	ETS50D3N-ETS50D4N	
106 II 1.4 i	(1)	05/96→		RUN50D	MAG50D-MAG45D	ETS50ND-ETS45ND	ETS50D3N-ETS50D4N	436210ES
106 II 1.6 i	(1)	05/96→		RUN50D	MAG50D-MAG45D	ETS50ND-ETS45ND	ETS50D3N-ETS50D4N	436210ES
106 II 1.6 i	(1)	05/96→		RUN50D	MAG50D-MAG45D	ETS50ND-ETS45ND	ETS50D3N-ETS50D4N	436210ES
106 II 1.6 S16	(1)	05/96→		RUN50D	MAG50D-MAG45D	ETS50ND-ETS45ND	ETS50D3N-ETS50D4N	436210ES
106 II 1.5 D	(1)	05/96→		RUN62D	MAG62D	ETS62ND	ETS60D3N	438320ES
106 II 1.5 D	(1)	10/00→		RUN62D	MAG62D	ETS62ND	ETS60D3N	438320ES
107 1.0		06/05→		RUN44D			ETS44D2N	
107 1.4 HDi		06/05→		RUN62D	MAG62D	ETS62ND	ETS60D3N	438320ES
205 I Convertible 1.4 CJ	(741B, 20D)	05/91→12/94		RUN50D	MAG50D-MAG45D	ETS50ND-ETS45ND	ETS50D3N-ETS50D4N	436210ES

	Design		START	RUN	MAGIS	ETS	ETS alternative	ES
PEUGEOT								
205 I Convertible 1.6 CJ	(741B, 20D)	08/92→12/94		RUN50D	MAG50D	ETS50ND	ETS50D3N-ETS50D4N	
205 II 1.4	(20A/C)	08/90→07/98		RUN50D	MAG50D-MAG45D	ETS50ND-ETS45ND	ETS50D3N-ETS50D4N	436210ES
205 II 1.6 Aut.	(20A/C)	05/90→09/98		RUN50D	MAG50D	ETS50ND	ETS50D3N-ETS50D4N	
205 II 1.6	(20A/C)	08/90→07/92		RUN50D	MAG50D-MAG45D	ETS50ND-ETS45ND	ETS50D3N-ETS50D4N	436210ES
205 II 1.7 TD	(20A/C)	01/90→09/98		RUN62D	MAG62D	ETS62ND	ETS60D3N	438320ES
205 II 1.8 XDT	(20A/C)	08/90→05/97		RUN62D	MAG62D	ETS62ND	ETS60D3N	438320ES
205 Box 1.7 Diesel		03/94→		RUN62D	MAG62D	ETS62ND	ETS60D3N	438320ES
206 Hatchback 1.0	(2A/C, T3E)	09/02→02/07		RUN50D				
206 Hatchback 1.1	(2A/C, T3E)	08/98→07/00		RUN50D				
206 Hatchback 1.0	(2A/C, T3E)	09/02→02/07		RUN50D				
206 Hatchback 1.1 i	(2A/C, T3E)	09/98→		RUN50D				
206 Hatchback 1.4 i	(2A/C, T3E)	09/98→		RUN50D				
206 Hatchback 1.4 16V	(2A/C, T3E)	10/03→		RUN50D				
206 Hatchback 1.6 i	(2A/C, T3E)	09/98→12/00		RUN50D				
206 Hatchback 1.6 16V	(2A/C, T3E)	12/00→		RUN50D				
206 Hatchback 2.0 S16	(2A/C, T3E)	04/99→10/00		RUN62D	MAG62D	ETS62ND	ETS60D3N	438320ES
206 Hatchback 2.0 S16	(2A/C, T3E)	10/00→		RUN62D	MAG62D	ETS62ND	ETS60D3N	438320ES
206 Hatchback 2.0 RC	(2A/C, T3E)	07/03→		RUN62D	MAG62D	ETS62ND	ETS60D3N	438320ES
206 Hatchback 1.4 HDi eco 70	(2A/C, T3E)	09/01→		RUN62D	MAG62D	ETS62ND	ETS60D3N	438320ES
206 Hatchback 1.4 HDi	(2A/C, T3E)	09/02→02/07		RUN62D	MAG62D	ETS62ND	ETS60D3N	438320ES
206 Hatchback 1.6 HDi 110	(2A/C, T3E)	05/04→		RUN62D	MAG62D	ETS62ND	ETS60D3N	438320ES
206 Hatchback 1.9 D	(2A/C, T3E)	09/98→11/01		RUN62D	MAG62D	ETS62ND	ETS60D3N	438320ES
206 Hatchback 2.0 HDI 90	(2A/C, T3E)	12/99→		RUN62D	MAG62D	ETS62ND	ETS60D3N	438320ES
206 Saloon 1.4		03/07→		RUN50D				
206 Saloon 1.6 16V		03/07→		RUN50D				
206 Saloon 1.4 HDi eco 70		09/08→		RUN62D				
206 SW 1.1	(2E/K)	07/02→		RUN50D				
206 SW 1.4	(2E/K)	07/02→		RUN50D				
206 SW 1.4 16V	(2E/K)	10/03→		RUN50D				
206 SW 1.6 16V	(2E/K)	07/02→		RUN50D				
206 SW 2.0 16V	(2E/K)	07/02→		RUN62D	MAG62D	ETS62ND	ETS60D3N	438320ES
206 SW 1.4 HDi	(2E/K)	07/02→		RUN62D	MAG62D	ETS62ND	ETS60D3N	438320ES
206 SW 1.6 HDi 110	(2E/K)	05/04→		RUN62D	MAG62D	ETS62ND	ETS60D3N	438320ES
206 SW 2.0 HDi	(2E/K)	07/02→		RUN62D	MAG62D	ETS62ND	ETS60D3N	438320ES
206 CC 1.6 16V	(2D)	09/00→		RUN50D				
206 CC 2.0 S16	(2D)	09/00→		RUN62D	MAG62D	ETS62ND	ETS60D3N	438320ES
206 CC 1.6 HDi 110	(2D)	04/05→		RUN62D	MAG62D	ETS62ND	ETS60D3N	438320ES
207 1.4	(WA_, WC_)	02/06→		RUN50D	MAG50D	ETS50ND	ETS50D3N-ETS50D4N	
207 1.4 16V	(WA_, WC_)	02/06→		RUN50D	MAG50D	ETS50ND	ETS50D3N-ETS50D4N	
207 1.4 16V	(WA_, WC_)	06/07→		RUN50D				
207 1.6 16V	(WA_, WC_)	02/06→		RUN50D	MAG50D	ETS50ND	ETS50D3N-ETS50D4N	
207 1.6 16V VTi	(WA_, WC_)	02/07→		RUN50D				
207 1.6 16V Turbo	(WA_, WC_)	02/06→		RUN50D	MAG50D	ETS50ND	ETS50D3N-ETS50D4N	
207 1.6 16V Turbo	(WA_, WC_)	10/09→		RUN62D				
207 1.6 16V RC	(WA_, WC_)	02/07→		RUN50D				
207 1.4 HDi	(WA_, WC_)	02/06→		RUN62D	MAG62D	ETS62ND	ETS60D3N	438320ES
207 1.6 HDi	(WA_, WC_)	02/06→		RUN62D	MAG62D	ETS62ND	ETS60D3N	438320ES

	Design		START	RUN	MAGIS	ETS	ETS alternative	ES
PEUGEOT								
207 1.6 HDi	(WA_, WC_)	11/09→		RUN62D				
207 1.6 HDi	(WA_, WC_)	02/06→		RUN62D	MAG62D	ETS62ND	ETS60D3N	438320ES
207 1.6 HDi	(WA_, WC_)	08/09→		RUN62D				
207 CC 1.6 16V	(WD_)	02/07→		RUN50D				
207 CC 1.6 16V Turbo	(WD_)	02/07→		RUN50D				
207 CC 1.6 16V Turbo	(WD_)	10/09→		RUN62D				
207 CC 1.6 HDi	(WD_)	02/07→		RUN62D	MAG62D	ETS62ND	ETS60D3N	438320ES
207 CC 1.6 HDi	(WD_)	08/09→		RUN62D				
207 SW 1.4	(WK_)	06/07→		RUN50D				
207 SW 1.4 16V	(WK_)	06/07→		RUN50D				
207 SW 1.6 16V	(WK_)	06/07→		RUN50D				
207 SW 1.6 16V RC	(WK_)	02/07→		RUN50D				
207 SW 1.6 HDi	(WK_)	06/07→		RUN62D	MAG62D	ETS62ND	ETS60D3N	438320ES
207 SW 1.6 HDi	(WK_)	11/09→		RUN62D				
207 SW 1.6 HDi	(WK_)	06/07→		RUN62D	MAG62D	ETS62ND	ETS60D3N	438320ES
207 SW 1.6 HDi	(WK_)	08/09→		RUN62D				
207 Box 1.4 HDi		04/07→		RUN62D				
207 Box 1.6 HDi		04/07→		RUN62D				
306 Hatchback 1.1	(7A, 7C, N3, N5)	05/93→05/01		RUN50D	MAG50D-MAG45D	ETS50ND-ETS45ND	ETS50D3N-ETS50D4N	436210ES
306 Hatchback 1.4	(7A, 7C, N3, N5)	05/93→05/01		RUN50D	MAG50D-MAG45D	ETS50ND-ETS45ND	ETS50D3N-ETS50D4N	436210ES
306 Hatchback 1.6	(7A, 7C, N3, N5)	05/93→10/00		RUN50D	MAG50D-MAG45D	ETS50ND-ETS45ND	ETS50D3N-ETS50D4N	436210ES
306 Hatchback 1.6	(7A, 7C, N3, N5)	07/00→05/01		RUN50D	MAG50D-MAG45D	ETS50ND-ETS45ND	ETS50D3N-ETS50D4N	436210ES
306 Hatchback 1.6	(7A, 7C, N3, N5)	10/00→05/01		RUN50D	MAG50D-MAG45D	ETS50ND-ETS45ND	ETS50D3N-ETS50D4N	436210ES
306 Hatchback 1.8 16V	(7A, 7C, N3, N5)	03/97→05/01		RUN50D				
306 Hatchback 1.8	(7A, 7C, N3, N5)	05/93→05/01		RUN62D	MAG62D	ETS62ND	ETS60D3N	438320ES
306 Hatchback 2.0 XSi	(7A, 7C, N3, N5)	05/93→05/01		RUN62D	MAG62D	ETS62ND	ETS60D3N	438320ES
306 Hatchback 2.0 16V	(7A, 7C, N3, N5)	03/97→05/01		RUN62D	MAG62D	ETS62ND	ETS60D3N	438320ES
306 Hatchback 2.0 S16	(7A, 7C, N3, N5)	06/94→05/01		RUN62D	MAG62D	ETS62ND	ETS60D3N	438320ES
306 Hatchback 2.0 S16	(7A, 7C, N3, N5)	05/93→05/01		RUN62D	MAG62D	ETS62ND	ETS60D3N	438320ES
306 Hatchback 1.9 D	(7A, 7C, N3, N5)	04/93→05/99		RUN62D	MAG62D	ETS62ND	ETS60D3N	438320ES
306 Hatchback 2.0 S16	(7A, 7C, N3, N5)	03/96→05/01		RUN62D	MAG62D	ETS62ND	ETS60D3N	438320ES
306 Hatchback 1.8 D	(7A, 7C, N3, N5)	04/93→05/99		RUN62D	MAG62D	ETS62ND	ETS60D3N	438320ES
306 Hatchback 1.8 D	(7A, 7C, N3, N5)	05/93→05/01		RUN62D	MAG62D	ETS62ND	ETS60D3N	438320ES
306 Hatchback 1.9 D	(7A, 7C, N3, N5)	09/98→05/01		RUN62D	MAG62D	ETS62ND	ETS60D3N	438320ES
306 Hatchback 1.9 D	(7A, 7C, N3, N5)	04/93→04/97		RUN62D	MAG62D	ETS62ND	ETS60D3N	438320ES
306 Hatchback 1.9 D	(7A, 7C, N3, N5)	05/93→05/01		RUN62D	MAG62D	ETS62ND	ETS60D3N	438320ES
306 Hatchback 1.9 D	(7A, 7C, N3, N5)	06/94→05/01		RUN62D	MAG62D	ETS62ND	ETS60D3N	438320ES
306 Hatchback 1.9 D	(7A, 7C, N3, N5)	03/98→05/01		RUN62D	MAG62D	ETS62ND	ETS60D3N	438320ES
306 Hatchback 1.9 DT	(7A, 7C, N3, N5)	05/93→05/01		RUN62D	MAG62D	ETS62ND	ETS60D3N	438320ES
306 Hatchback 2.0 HDI 90	(7A, 7C, N3, N5)	06/99→05/01		RUN72D				
306 1.1	(7B, N3, N5)	06/94→05/01		RUN50D	MAG50D-MAG45D	ETS50ND-ETS45ND	ETS50D3N-ETS50D4N	436210ES
306 1.4	(7B, N3, N5)	04/93→10/94		RUN50D	MAG50D-MAG45D	ETS50ND-ETS45ND	ETS50D3N-ETS50D4N	436210ES
306 1.4 SL	(7B, N3, N5)	06/94→05/01		RUN50D	MAG50D-MAG45D	ETS50ND-ETS45ND	ETS50D3N-ETS50D4N	436210ES
306 1.6 SR	(7B, N3, N5)	06/94→10/00		RUN50D	MAG50D-MAG45D	ETS50ND-ETS45ND	ETS50D3N-ETS50D4N	436210ES
306 1.6	(7B, N3, N5)	10/00→05/01		RUN50D	MAG50D-MAG45D	ETS50ND-ETS45ND	ETS50D3N-ETS50D4N	436210ES
306 1.8 16V	(7B, N3, N5)	03/97→05/01		RUN50D				
306 1.8	(7B, N3, N5)	10/95→04/97		RUN62D	MAG62D	ETS62ND	ETS60D3N	438320ES

	Design		START	RUN	MAGIS	ETS	ETS alternative	ES
PEUGEOT								
306 1.8 ST	(7B, N3, N5)	06/94→05/01		RUN50D				
306 1.8 D	(7B, N3, N5)	05/97→06/00		RUN62D	MAG62D	ETS62ND	ETS60D3N	438320ES
306 2.0 ST	(7B, N3, N5)	07/94→05/01		RUN62D	MAG62D	ETS62ND	ETS60D3N	438320ES
306 2.0	(7B, N3, N5)	03/97→05/01		RUN62D	MAG62D	ETS62ND	ETS60D3N	438320ES
306 2.0	(7B, N3, N5)	05/97→06/00		RUN62D	MAG62D	ETS62ND	ETS60D3N	438320ES
306 2.0 S16	(7B, N3, N5)	06/94→05/01		RUN62D	MAG62D	ETS62ND	ETS60D3N	438320ES
306 2.0 S16	(7B, N3, N5)	06/94→05/01		RUN62D	MAG62D	ETS62ND	ETS60D3N	438320ES
306 1.9 STD	(7B, N3, N5)	02/94→10/95		RUN62D	MAG62D	ETS62ND	ETS60D3N	438320ES
306 1.9 D	(7B, N3, N5)	09/98→05/01		RUN62D	MAG62D	ETS62ND	ETS60D3N	438320ES
306 1.9 SLD	(7B, N3, N5)	06/94→05/01		RUN62D	MAG62D	ETS62ND	ETS60D3N	438320ES
306 1.9 SLD	(7B, N3, N5)	06/94→05/01		RUN62D	MAG62D	ETS62ND	ETS60D3N	438320ES
306 1.9 D	(7B, N3, N5)	02/94→04/97		RUN62D	MAG62D	ETS62ND	ETS60D3N	438320ES
306 1.9 D	(7B, N3, N5)	03/98→05/01		RUN62D	MAG62D	ETS62ND	ETS60D3N	438320ES
306 1.9 SRDT	(7B, N3, N5)	06/94→05/01		RUN62D	MAG62D	ETS62ND	ETS60D3N	438320ES
306 2.0 HDI 90	(7B, N3, N5)	06/99→05/01		RUN72D				
306 Break 1.4	(7E, N3, N5)	03/97→04/02		RUN50D	MAG50D-MAG45D	ETS50ND-ETS45ND	ETS50D3N-ETS50D4N	436210ES
306 Break 1.6	(7E, N3, N5)	03/97→10/00		RUN50D	MAG50D-MAG45D	ETS50ND-ETS45ND	ETS50D3N-ETS50D4N	436210ES
306 Break 1.6	(7E, N3, N5)	10/00→04/02		RUN50D	MAG50D-MAG45D	ETS50ND-ETS45ND	ETS50D3N-ETS50D4N	436210ES
306 Break 1.8	(7E, N3, N5)	03/97→04/02		RUN50D				
306 Break 1.8 16V	(7E, N3, N5)	03/97→04/02		RUN50D				
306 Break 2.0	(7E, N3, N5)	03/97→04/02		RUN62D	MAG62D	ETS62ND	ETS60D3N	438320ES
306 Break 1.9 D	(7E, N3, N5)	09/98→04/02		RUN62D	MAG62D	ETS62ND	ETS60D3N	438320ES
306 Break 1.9 D	(7E, N3, N5)	05/97→05/99		RUN62D	MAG62D	ETS62ND	ETS60D3N	438320ES
306 Break 1.9 D	(7E, N3, N5)	03/97→04/02		RUN62D	MAG62D	ETS62ND	ETS60D3N	438320ES
306 Break 1.9 D	(7E, N3, N5)	03/98→04/02		RUN62D	MAG62D	ETS62ND	ETS60D3N	438320ES
306 Break 1.9 TD	(7E, N3, N5)	02/97→04/02		RUN62D	MAG62D	ETS62ND	ETS60D3N	438320ES
306 Break 2.0 HDI 90	(7E, N3, N5)	06/99→04/02		RUN72D				
306 Convertible 1.6	(7D, N3, N5)	04/96→10/00		RUN50D	MAG50D-MAG45D	ETS50ND-ETS45ND	ETS50D3N-ETS50D4N	436210ES
306 Convertible 1.6	(7D, N3, N5)	10/00→04/02		RUN50D	MAG50D-MAG45D	ETS50ND-ETS45ND	ETS50D3N-ETS50D4N	436210ES
306 Convertible 1.8 16V	(7D, N3, N5)	07/00→04/02		RUN50D				
306 Convertible 1.8	(7D, N3, N5)	03/94→04/02		RUN62D	MAG62D	ETS62ND	ETS60D3N	438320ES
306 Convertible 2.0	(7D, N3, N5)	03/94→04/02		RUN62D	MAG62D	ETS62ND	ETS60D3N	438320ES
306 Convertible 2.0 16V	(7D, N3, N5)	03/97→04/02		RUN62D	MAG62D	ETS62ND	ETS60D3N	438320ES
307 1.4	(3A/C)	08/00→		RUN50D	MAG50D-MAG45D	ETS50ND-ETS45ND	ETS50D3N-ETS50D4N	436210ES
307 1.4 16V	(3A/C)	11/03→		RUN50D	MAG50D-MAG45D	ETS50ND-ETS45ND	ETS50D3N-ETS50D4N	436210ES
307 1.6 16V	(3A/C)	08/00→		RUN50D	MAG50D-MAG45D	ETS50ND-ETS45ND	ETS50D3N-ETS50D4N	436210ES
307 1.6 BioFlex	(3A/C)	09/07→		RUN50D				
307 2.0 16V	(3A/C)	08/00→		RUN62D	MAG62D	ETS62ND	ETS60D3N	438320ES
307 2.0 16V	(3A/C)	03/05→		RUN62D	MAG62D	ETS62ND	ETS60D3N	438320ES
307 2.0 16V	(3A/C)	06/05→		RUN62D	MAG62D	ETS62ND	ETS60D3N	438320ES
307 1.4 HDi	(3A/C)	10/01→		RUN62D	MAG62D	ETS62ND	ETS60D3N	438320ES
307 1.6 HDi	(3A/C)	04/05→		RUN62D	MAG62D	ETS62ND	ETS60D3N	438320ES
307 1.6 HDi 110	(3A/C)	02/04→		RUN62D	MAG62D	ETS62ND	ETS60D3N	438320ES
307 2.0 HDi 90	(3A/C)	08/00→		RUN62D	MAG62D	ETS62ND	ETS60D3N	438320ES
307 2.0 HDi 110	(3A/C)	08/00→		RUN72D				
307 2.0 HDi 135	(3A/C)	10/03→		RUN72D				
307 Break 1.4 16V	(3E)	11/03→		RUN50D	MAG50D-MAG45D	ETS50ND-ETS45ND	ETS50D3N-ETS50D4N	436210ES

	Design		START	RUN	MAGIS	ETS	ETS alternative	ES
PEUGEOT								
307 Break 1.6 16V	(3E)	03/02→		RUN50D	MAG50D-MAG45D	ETS50ND-ETS45ND	ETS50D3N-ETS50D4N	436210ES
307 Break 1.6 BioFlex	(3E)	09/07→		RUN50D				
307 Break 2.0	(3E)	03/02→		RUN62D	MAG62D	ETS62ND	ETS60D3N	438320ES
307 Break 2.0 16V	(3E)	03/05→		RUN62D	MAG62D	ETS62ND	ETS60D3N	438320ES
307 Break 2.0 16V	(3E)	06/05→		RUN62D	MAG62D	ETS62ND	ETS60D3N	438320ES
307 Break 1.4 HDi	(3E)	03/02→		RUN62D	MAG62D	ETS62ND	ETS60D3N	438320ES
307 Break 1.6 HDi	(3E)	04/05→		RUN62D	MAG62D	ETS62ND	ETS60D3N	438320ES
307 Break 1.6 HDi 110	(3E)	02/04→		RUN62D	MAG62D	ETS62ND	ETS60D3N	438320ES
307 Break 2.0 HDI 90	(3E)	03/02→		RUN62D	MAG62D	ETS62ND	ETS60D3N	438320ES
307 Break 2.0 HDI 110	(3E)	03/02→		RUN62D	MAG62D	ETS62ND	ETS60D3N	438320ES
307 Break 2.0 HDi 135	(3E)	02/04→		RUN72D				
307 SW 1.4 16V	(3H)	11/03→		RUN50D	MAG50D-MAG45D	ETS50ND-ETS45ND	ETS50D3N-ETS50D4N	436210ES
307 SW 1.6 16V	(3H)	03/02→		RUN50D	MAG50D-MAG45D	ETS50ND-ETS45ND	ETS50D3N-ETS50D4N	436210ES
307 SW 1.6 BioFlex	(3H)	09/07→		RUN50D	MAG50D-MAG45D	ETS50ND-ETS45ND	ETS50D3N-ETS50D4N	436210ES
307 SW 2.0 16V	(3H)	03/02→		RUN62D	MAG62D	ETS62ND	ETS60D3N	438320ES
307 SW 2.0 16V	(3H)	03/05→		RUN62D	MAG62D	ETS62ND	ETS60D3N	438320ES
307 SW 1.6 D	(3H)	12/06→		RUN62D	MAG62D	ETS62ND	ETS60D3N	438320ES
307 SW 1.6 HDi 110	(3H)	02/04→		RUN62D	MAG62D	ETS62ND	ETS60D3N	438320ES
307 SW 2.0 HDI 90	(3H)	03/02→		RUN62D	MAG62D	ETS62ND	ETS60D3N	438320ES
307 SW 2.0 HDI 110	(3H)	03/02→		RUN72D				
307 SW 2.0 HDi 135	(3H)	02/04→		RUN72D				
307 CC 1.6 16V	(3B)	03/05→		RUN50D	MAG50D-MAG45D	ETS50ND-ETS45ND	ETS50D3N-ETS50D4N	436210ES
307 CC 2.0 16V	(3B)	10/03→		RUN62D	MAG62D	ETS62ND	ETS60D3N	438320ES
307 CC 2.0 16V	(3B)	03/05→		RUN62D	MAG62D	ETS62ND	ETS60D3N	438320ES
307 CC 2.0 16V	(3B)	10/03→		RUN62D	MAG62D	ETS62ND	ETS60D3N	438320ES
307 CC 2.0 HDi 135	(3B)	06/05→		RUN72D				
308 1.4 16V	(4A_, 4C_)	09/07→		RUN50D				
308 1.4 16V	(4A_, 4C_)	12/09→		RUN50D				
308 1.6 16V	(4A_, 4C_)	09/07→		RUN62D	MAG62D	ETS62ND	ETS60D3N	438320ES
308 1.6 16V	(4A_, 4C_)	09/07→		RUN62D	MAG62D	ETS62ND	ETS60D3N	438320ES
308 1.6 16V	(4A_, 4C_)	09/07→		RUN62D	MAG62D	ETS62ND	ETS60D3N	438320ES
308 1.6 16V	(4A_, 4C_)	10/09→		RUN50D				
308 1.6 16V	(4A_, 4C_)	03/08→		RUN62D	MAG62D	ETS62ND	ETS60D3N	438320ES
308 1.6 HDi	(4A_, 4C_)	09/07→		RUN62D	MAG62D	ETS62ND	ETS60D3N	438320ES
308 1.6 HDi	(4A_, 4C_)	11/09→		RUN62D				
308 1.6 HDi	(4A_, 4C_)	09/07→		RUN62D	MAG62D	ETS62ND	ETS60D3N	438320ES
308 1.6 HDi	(4A_, 4C_)	12/09→		RUN62D				
308 2.0 HDi	(4A_, 4C_)	09/07→		RUN72D				
308 SW 1.4 16V		09/07→		RUN50D				
308 SW 1.4 16V		12/09→		RUN50D				
308 SW 1.6 Bioflex		03/09→		RUN62D				
308 SW 1.6 16V		09/07→		RUN62D	MAG62D	ETS62ND	ETS60D3N	438320ES
308 SW 1.6 16V		09/07→		RUN62D	MAG62D	ETS62ND	ETS60D3N	438320ES
308 SW 1.6 16V		09/07→		RUN62D	MAG62D	ETS62ND	ETS60D3N	438320ES
308 SW 1.6 16V		10/09→		RUN50D				
308 SW 1.6 16V		03/08→		RUN62D	MAG62D	ETS62ND	ETS60D3N	438320ES
308 SW 2.0 Bioflex		01/08→		RUN62D	MAG62D	ETS62ND	ETS60D3N	438320ES

	Design		START	RUN	MAGIS	ETS	ETS alternative	ES
PEUGEOT								
308 SW 1.6 HDi		09/07→		RUN62D	MAG62D	ETS62ND	ETS60D3N	438320ES
308 SW 1.6 HDi		09/07→		RUN62D	MAG62D	ETS62ND	ETS60D3N	438320ES
308 SW 1.6 HDi		12/09→		RUN62D				
308 SW 2.0 HDi		09/07→		RUN72D				
308 SW 2.0 HDi		09/07→		RUN72D				
308 SW 2.0 HDi		06/09→		RUN72D				
308 CC 1.6 16V		06/09→		RUN62D				
308 CC 1.6 16V		06/09→		RUN62D				
308 CC 1.6 16V		06/09→		RUN62D	MAG62D	ETS62ND	ETS60D3N	438320ES
308 CC 1.6 16V		06/09→		RUN62D				
308 CC 1.6 HDi		06/09→		RUN62D				
308 CC 2.0 HDi		04/09→		RUN72D				
308 CC 2.0 HDi		04/09→		RUN72D				
308 CC 2.0 HDi		06/09→		RUN72D				
309 II 1.1	(3C, 3A)	08/90→12/93		RUN50D				
309 II 1.4	(3C, 3A)	07/90→12/93		RUN50D	MAG50D-MAG45D	ETS50ND-ETS45ND	ETS50D3N-ETS50D4N	436210ES
309 II 1.9	(3C, 3A)	10/90→12/93		RUN62D	MAG62D	ETS62ND	ETS60D3N	438320ES
309 II 1.9 GTI 16V	(3C, 3A)	10/90→12/93		RUN62D	MAG62D	ETS62ND	ETS60D3N	438320ES
405 II 1.4	(4B)	08/92→10/95		RUN50D				
405 II 1.6	(4B)	08/92→10/95		RUN50D				
405 II 1.8	(4B)	08/92→10/95		RUN50D				
405 II 2.0	(4B)	08/92→10/95		RUN62D	MAG62D	ETS62ND	ETS60D3N	438320ES
405 II 2.0 X4	(4B)	08/92→10/95		RUN62D	MAG62D	ETS62ND	ETS60D3N	438320ES
405 II 2.0 16V	(4B)	06/94→10/95		RUN62D	MAG62D	ETS62ND	ETS60D3N	438320ES
405 II 2.0 MI-16	(4B)	08/92→10/95		RUN62D	MAG62D	ETS62ND	ETS60D3N	438320ES
405 II 2.0 T 16 X4	(4B)	08/92→10/95		RUN62D	MAG62D	ETS62ND	ETS60D3N	438320ES
405 II 1.9 D	(4B)	08/92→10/95		RUN62D	MAG62D	ETS62ND	ETS60D3N	438320ES
405 II 1.9 D	(4B)	06/94→10/95		RUN62D	MAG62D	ETS62ND	ETS60D3N	438320ES
405 II 1.9 TD	(4B)	08/92→10/95		RUN62D	MAG62D	ETS62ND	ETS60D3N	438320ES
405 II Break 1.4	(4E)	07/93→06/94		RUN50D	MAG50D-MAG45D	ETS50ND-ETS45ND	ETS50D3N-ETS50D4N	436210ES
405 II Break 1.4	(4E)	08/92→10/96		RUN50D				
405 II Break 1.6	(4E)	08/92→10/96		RUN50D				
405 II Break 1.8	(4E)	08/92→10/96		RUN50D				
405 II Break 2.0	(4E)	08/92→10/96		RUN62D	MAG62D	ETS62ND	ETS60D3N	438320ES
405 II Break 2.0 4x4	(4E)	08/92→10/96		RUN62D	MAG62D	ETS62ND	ETS60D3N	438320ES
405 II Break 2.0 4x4	(4E)	08/92→12/95		RUN62D	MAG62D	ETS62ND	ETS60D3N	438320ES
405 II Break 1.9 D	(4E)	08/92→10/96		RUN72D				
405 II Break 1.9 D	(4E)	06/94→10/96		RUN72D				
405 II Break 1.9 D	(4E)	09/93→12/95		RUN62D	MAG62D	ETS62ND	ETS60D3N	438320ES
405 II Break 1.9 TD	(4E)	08/92→10/96		RUN72D				
406 1.6	(8B)	11/95→05/04		RUN50D				
406 1.8 16V	(8B)	10/00→05/04		RUN50D	MAG50D	ETS50ND	ETS50D3N-ETS50D4N	
406 1.8	(8B)	05/97→05/04		RUN62D	MAG62D	ETS62ND	ETS60D3N	438320ES
406 1.8 16V	(8B)	11/95→10/00		RUN62D	MAG62D	ETS62ND	ETS60D3N	438320ES
406 2.0 16V	(8B)	01/99→08/00		RUN62D	MAG62D	ETS62ND	ETS60D3N	438320ES
406 2.0 16V	(8B)	08/00→05/04		RUN62D	MAG62D	ETS62ND	ETS60D3N	438320ES
406 2.0 16V HPi	(8B)	05/01→05/04		RUN62D	MAG62D	ETS62ND	ETS60D3N	438320ES

	Design		START	RUN	MAGIS	ETS	ETS alternative	ES
PEUGEOT								
406 2.0 16V	(8B)	11/95→05/04		RUN62D	MAG62D	ETS62ND	ETS60D3N	438320ES
406 2.0 Turbo	(8B)	04/96→05/04		RUN62D	MAG62D	ETS62ND	ETS60D3N	438320ES
406 2.2	(8B)	07/00→05/04		RUN62D	MAG62D	ETS62ND	ETS60D3N	438320ES
406 3.0 24V	(8B)	10/96→05/04		RUN72D	MAG74D	ETS74ND	ETS70D1N-ETS74DI	476420ES
406 3.0 V6	(8B)	03/00→05/04		RUN72D				
406 1.9 D	(8B)	10/96→05/04		RUN62D	MAG62D	ETS62ND	ETS60D3N	438320ES
406 1.9 TD	(8B)	01/96→05/04		RUN72D	MAG74D	ETS74ND	ETS70D1N-ETS74DI	476420ES
406 1.9 TD	(8B)	01/96→05/04		RUN72D				
406 2.0 HDI 90	(8B)	02/99→05/04		RUN62D	MAG62D	ETS62ND	ETS60D3N	438320ES
406 2.0 HDi 110	(8B)	08/01→05/04		RUN62D	MAG62D	ETS62ND	ETS60D3N	438320ES
406 2.0 HDI 110	(8B)	06/98→08/01		RUN62D	MAG62D	ETS62ND	ETS60D3N	438320ES
406 2.1 TD 12V	(8B)	01/96→05/04		RUN72D	MAG74D	ETS74ND	ETS70D1N-ETS74DI	476420ES
406 2.2 HDi	(8B)	03/00→05/04		RUN62D	MAG62D	ETS62ND	ETS60D3N	438320ES
406 Break 1.8 16V	(8E/F)	10/00→10/04		RUN50D	MAG50D	ETS50ND	ETS50D3N-ETS50D4N	
406 Break 1.8	(8E/F)	05/97→10/04		RUN62D	MAG62D	ETS62ND	ETS60D3N	438320ES
406 Break 1.8 16V	(8E/F)	10/96→10/00		RUN62D	MAG62D	ETS62ND	ETS60D3N	438320ES
406 Break 2.0 16V	(8E/F)	01/99→10/00		RUN62D	MAG62D	ETS62ND	ETS60D3N	438320ES
406 Break 2.0 16V	(8E/F)	10/00→10/04		RUN62D	MAG62D	ETS62ND	ETS60D3N	438320ES
406 Break 2.0 16V HPi	(8E/F)	05/01→10/04		RUN62D	MAG62D	ETS62ND	ETS60D3N	438320ES
406 Break 2.0 16V	(8E/F)	10/96→10/04		RUN62D	MAG62D	ETS62ND	ETS60D3N	438320ES
406 Break 2.0 Turbo	(8E/F)	10/96→10/04		RUN62D	MAG62D	ETS62ND	ETS60D3N	438320ES
406 Break 2.2	(8E/F)	07/00→10/04		RUN62D	MAG62D	ETS62ND	ETS60D3N	438320ES
406 Break 3.0 24V	(8E/F)	10/96→10/04		RUN72D	MAG74D	ETS74ND	ETS70D1N-ETS74DI	476420ES
406 Break 3.0 V6	(8E/F)	03/00→10/04		RUN62D	MAG62D	ETS62ND	ETS60D3N	438320ES
406 Break 1.9 D	(8E/F)	10/96→10/04		RUN62D	MAG62D	ETS62ND	ETS60D3N	438320ES
406 Break 1.9 TD	(8E/F)	10/96→10/04		RUN72D	MAG74D	ETS74ND	ETS70D1N-ETS74DI	476420ES
406 Break 2.0 HDI 90	(8E/F)	02/99→10/04		RUN62D	MAG62D	ETS62ND	ETS60D3N	438320ES
406 Break 2.0 HDi 110	(8E/F)	08/01→10/04		RUN62D	MAG62D	ETS62ND	ETS60D3N	438320ES
406 Break 2.0 HDI 110	(8E/F)	02/99→04/04		RUN62D	MAG62D	ETS62ND	ETS60D3N	438320ES
406 Break 2.1 TD 12V	(8E/F)	10/96→10/04		RUN72D	MAG74D	ETS74ND	ETS70D1N-ETS74DI	476420ES
406 Break 2.2 HDI	(8E/F)	03/00→10/04		RUN62D	MAG62D	ETS62ND	ETS60D3N	438320ES
406 Coupe 2.0 16V	(8C)	01/99→10/00		RUN62D	MAG62D	ETS62ND	ETS60D3N	438320ES
406 Coupe 2.0 16V	(8C)	10/00→12/04		RUN62D	MAG62D	ETS62ND	ETS60D3N	438320ES
406 Coupe 2.0 16V	(8C)	03/97→12/04		RUN62D	MAG62D	ETS62ND	ETS60D3N	438320ES
406 Coupe 2.2	(8C)	03/02→12/04		RUN62D	MAG62D	ETS62ND	ETS60D3N	438320ES
406 Coupe 3.0 V6 24V	(8C)	03/97→12/04		RUN72D	MAG74D	ETS74ND	ETS70D1N-ETS74DI	476420ES
406 Coupe 3.0 V6	(8C)	03/00→12/04		RUN72D				
406 Coupe 2.2 HDI	(8C)	03/00→12/04		RUN62D	MAG62D	ETS62ND	ETS60D3N	438320ES
407 1.8	(6D_)	05/04→		RUN62D	MAG62D	ETS62ND	ETS60D3N	438320ES
407 1.8 16V	(6D_)	09/05→		RUN62D	MAG62D	ETS62ND	ETS60D3N	438320ES
407 2.0	(6D_)	05/04→		RUN62D	MAG62D	ETS62ND	ETS60D3N	438320ES
407 2.0 16V	(6D_)	09/05→		RUN62D	MAG62D	ETS62ND	ETS60D3N	438320ES
407 2.2	(6D_)	05/04→		RUN62D	MAG62D	ETS62ND	ETS60D3N	438320ES
407 2.2 16V	(6D_)	09/05→		RUN62D	MAG62D	ETS62ND	ETS60D3N	438320ES
407 3.0	(6D_)	05/04→		RUN62D	MAG62D	ETS62ND	ETS60D3N	438320ES
407 1.6 HDi 110	(6D_)	05/04→		RUN62D	MAG62D	ETS62ND	ETS60D3N	438320ES
407 2.0 HDi 135	(6D_)	05/04→		RUN72D				

	Design		START	RUN	MAGIS	ETS	ETS alternative	ES
PEUGEOT								
407 2.0 HDi	(6D_)	08/08→		RUN72D				
407 2.0 HDi	(6D_)	07/09→		RUN72D				
407 2.2 HDi	(6D_)	06/08→		RUN72D				
407 2.2 HDi 170	(6D_)	05/06→		RUN72D				
407 2.7 HDi	(6D_)	10/05→		RUN72D				
407 SW 1.8	(6E_)	05/04→		RUN62D	MAG62D	ETS62ND	ETS60D3N	438320ES
407 SW 1.8 16V	(6E_)	09/05→		RUN62D	MAG62D	ETS62ND	ETS60D3N	438320ES
407 SW 2.0	(6E_)	05/04→		RUN62D	MAG62D	ETS62ND	ETS60D3N	438320ES
407 SW 2.0 16V	(6E_)	09/05→		RUN62D	MAG62D	ETS62ND	ETS60D3N	438320ES
407 SW 2.2	(6E_)	05/04→		RUN62D	MAG62D	ETS62ND	ETS60D3N	438320ES
407 SW 2.2 16V	(6E_)	09/05→		RUN62D	MAG62D	ETS62ND	ETS60D3N	438320ES
407 SW 3.0	(6E_)	05/04→		RUN62D	MAG62D	ETS62ND	ETS60D3N	438320ES
407 SW 1.6 HDi 110	(6E_)	05/04→		RUN62D	MAG62D	ETS62ND	ETS60D3N	438320ES
407 SW 2.0 HDi 135	(6E_)	05/04→		RUN72D				
407 SW 2.0 HDi	(6E_)	08/08→		RUN72D				
407 SW 2.0 HDi	(6E_)	07/09→		RUN62D				
407 SW 2.2 HDi	(6E_)	06/08→		RUN72D				
407 SW 2.2 HDi 170	(6E_)	05/06→		RUN72D				
407 SW 2.7 HDi	(6E_)	10/05→		RUN72D				
407 SW 2.0 Bioflex	(6E_)	01/08→		RUN62D	MAG62D	ETS62ND	ETS60D3N	438320ES
407 Coupe 2.2 16V	(6C_)	10/05→		RUN62D	MAG62D	ETS62ND	ETS60D3N	438320ES
407 Coupe 3.0 V6	(6C_)	10/05→		RUN72D	MAG74D	ETS74ND	ETS70D1N-ETS74DI	476420ES
407 Coupe 2.0 HDi	(6C_)	10/05→		RUN72D				
407 Coupe 2.0 HDi	(6C_)	06/09→		RUN72D				
407 Coupe 2.7 HDi	(6C_)	10/05→	AGM70D	RUN72D				
407 Coupe 3.0 HDi	(6C_)	06/09→		RUN72D				
605 2.0	(6B)	02/90→09/99		RUN62D	MAG62D	ETS62ND	ETS60D3N	438320ES
605 2.0 16V	(6B)	07/94→09/99		RUN62D	MAG62D	ETS62ND	ETS60D3N	438320ES
605 2.0 Turbo	(6B)	07/92→09/99		RUN62D	MAG62D	ETS62ND	ETS60D3N	438320ES
605 2.0 Turbo	(6B)	07/91→09/99		RUN62D	MAG62D	ETS62ND	ETS60D3N	438320ES
605 3.0 V6	(6B)	04/97→09/99		RUN72D	MAG74D	ETS74ND	ETS70D1N-ETS74DI	476420ES
605 2.1 TD 12V	(6B)	08/94→09/99		RUN72D	MAG74D	ETS74ND	ETS70D1N-ETS74DI	476420ES
605 2.5 Turbo Diesel	(6B)	07/94→09/99		RUN72D	MAG74D	ETS74ND	ETS70D1N-ETS74DI	476420ES
607 2.0	(9D, 9U)	02/00→		RUN62D	MAG62D	ETS62ND	ETS60D3N	438320ES
607 2.2 16V	(9D, 9U)	02/00→		RUN62D	MAG62D	ETS62ND	ETS60D3N	438320ES
607 2.2 16V	(9D, 9U)	09/05→		RUN62D	MAG62D	ETS62ND	ETS60D3N	438320ES
607 3.0 V6 24V	(9D, 9U)	02/00→		RUN72D				
607 3.0 V6 24V	(9D, 9U)	03/04→	AGM70D	RUN72D				
607 2.0 HDi	(9D, 9U)	03/01→07/04		RUN62D	MAG62D	ETS62ND	ETS60D3N	438320ES
607 2.0 HDI	(9D, 9U)	05/00→		RUN62D	MAG62D	ETS62ND	ETS60D3N	438320ES
607 2.0 HDI	(9D, 9U)	09/05→	AGM70D	RUN62D	MAG62D	ETS62ND	ETS60D3N	438320ES
607 2.2 HDI	(9D, 9U)	02/00→		RUN72D				
607 2.2 HDi	(9D, 9U)	05/06→	AGM70D	RUN72D				
607 2.7 HDi 24V	(9D, 9U)	12/04→	AGM80D	RUN72D				
806 1.8	(221)	07/95→08/02		RUN62D	MAG62D	ETS62ND	ETS60D3N	438320ES
806 2.0	(221)	06/94→08/02		RUN62D	MAG62D	ETS62ND	ETS60D3N	438320ES
806 2.0 16V	(221)	05/98→09/00		RUN62D	MAG62D	ETS62ND	ETS60D3N	438320ES

	Design		START	RUN	MAGIS	ETS	ETS alternative	ES
PEUGEOT								
806 2.0 16V	(221)	09/00→08/02		RUN62D	MAG62D	ETS62ND	ETS60D3N	438320ES
806 2.0 Turbo	(221)	06/94→08/02		RUN62D	MAG62D	ETS62ND	ETS60D3N	438320ES
806 1.9 TD	(221)	07/95→08/02		RUN72D				
806 1.9 TD	(221)	05/97→08/02		RUN72D				
806 2.0 HDI	(221)	08/99→08/02		RUN72D	MAG74D	ETS74ND	ETS70D1N-ETS74DI	476420ES
806 2.0 HDI 16V	(221)	08/99→08/02		RUN72D	MAG74D	ETS74ND	ETS70D1N-ETS74DI	476420ES
806 2.1 td 12V	(221)	06/96→08/99		RUN72D	MAG74D	ETS74ND	ETS70D1N-ETS74DI	476420ES
807 2.0	(E)	06/02→		RUN62D	MAG62D	ETS62ND	ETS60D3N	438320ES
807 2.0 16V	(E)	09/05→		RUN62D	MAG62D	ETS62ND	ETS60D3N	438320ES
807 2.2	(E)	06/02→		RUN62D	MAG62D	ETS62ND	ETS60D3N	438320ES
807 3.0 V6	(E)	06/02→		RUN72D				
807 2.0 HDi	(E)	06/02→		RUN62D	MAG62D	ETS62ND	ETS60D3N	438320ES
807 2.0 HDi	(E)	04/04→05/06		RUN62D	MAG62D	ETS62ND	ETS60D3N	438320ES
807 2.0 HDi	(E)	11/06→		RUN62D	MAG62D	ETS62ND	ETS60D3N	438320ES
807 2.0 HDI	(E)	06/06→		RUN62D	MAG62D	ETS62ND	ETS60D3N	438320ES
807 2.2 HDi	(E)	06/02→		RUN72D				
807 2.2 HDi	(E)	06/06→		RUN62D	MAG62D	ETS62ND	ETS60D3N	438320ES
1007 1.4	(KM_)	04/05→		RUN50D				
1007 1.4 16V	(KM_)	10/05→		RUN50D				
1007 1.6 16V	(KM_)	04/05→		RUN50D	MAG50D	ETS50ND	ETS50D3N-ETS50D4N	
1007 1.4 HDi	(KM_)	04/05→		RUN62D	MAG62D	ETS62ND	ETS60D3N	438320ES
1007 1.6 HDi	(KM_)	06/07→		RUN62D	MAG62D	ETS62ND	ETS60D3N	438320ES
3008 1.6 VTi		06/09→		RUN62D	MAG62D	ETS62ND	ETS60D3N	438320ES
3008 1.6 THP		06/09→		RUN62D	MAG62D	ETS62ND	ETS60D3N	438320ES
3008 1.6 THP		06/09→		RUN62D	MAG62D	ETS62ND	ETS60D3N	438320ES
3008 1.6 HDi		06/09→		RUN62D	MAG62D	ETS62ND	ETS60D3N	438320ES
3008 2.0 HDi		06/09→		RUN72D				
3008 2.0 HDi		06/09→		RUN72D				
5008 1.6 16V		09/09→		RUN62D				
5008 1.6 16V		09/09→		RUN62D				
5008 1.6 HDi		09/09→		RUN62D				
5008 2.0 HDi		06/09→		RUN72D				
5008 2.0 HDi		09/09→		RUN72D				
RCZ 1.6 16V		06/10→		RUN72D				
RCZ 2.0 HDi		03/10→		RUN72D				
BIPPER 1.4	(AA_)	02/08→		RUN50D				
BIPPER 1.4 HDi	(AA_)	02/08→		RUN62D	MAG62D	ETS62ND	ETS60D3N	438320ES
BIPPER Tepee 1.4		04/08→		RUN50D				
BIPPER Tepee 1.4 HDi		04/08→		RUN62D				
EXPERT 1.6	(224)	02/96→		RUN50D	MAG50D-MAG45D	ETS50ND-ETS45ND	ETS50D3N-ETS50D4N	436210ES
EXPERT 1.8	(224)	10/96→09/00		RUN62D	MAG62D	ETS62ND	ETS60D3N	438320ES
EXPERT 2.0	(224)	07/00→		RUN62D	MAG62D	ETS62ND	ETS60D3N	438320ES
EXPERT 1.9 D	(224)	12/03→		RUN62D	MAG62D	ETS62ND	ETS60D3N	438320ES
EXPERT 1.9 D	(224)	02/96→		RUN72D				
EXPERT 1.9 TD	(224)	02/96→		RUN72D				
EXPERT 1.9 D	(224)	10/95→05/98		RUN62D	MAG62D	ETS62ND	ETS60D3N	438320ES
EXPERT 1.9 TD	(224)	02/96→		RUN72D				

	Design		START	RUN	MAGIS	ETS	ETS alternative	ES
PEUGEOT								
EXPERT 2.0 HDI	(224)	07/00→		RUN72D				
EXPERT 2.0 HDi	(224)	10/00→11/03		RUN72D				
EXPERT 2.0 HDI	(224)	07/00→		RUN72D				
EXPERT Box 1.6	(222)	02/96→		RUN50D	MAG50D-MAG45D	ETS50ND-ETS45ND	ETS50D3N-ETS50D4N	436210ES
EXPERT Box 1.8	(222)	10/96→09/00		RUN62D	MAG62D	ETS62ND	ETS60D3N	438320ES
EXPERT Box 2.0	(222)	09/02→		RUN62D	MAG62D	ETS62ND	ETS60D3N	438320ES
EXPERT Box 1.9 D 70	(222)	12/98→		RUN72D				
EXPERT Box 1.9 D	(222)	02/96→		RUN72D				
EXPERT Box 1.9 TD	(222)	02/96→		RUN72D				
EXPERT Box 1.9 TD	(222)	02/96→		RUN72D				
EXPERT Box 2.0 HDI	(222)	07/00→		RUN72D				
EXPERT Box 2.0 HDI	(222)	07/00→		RUN72D				
EXPERT Box 2.0 HDI	(222)	07/00→		RUN72D				
EXPERT Flatbed / Chassis 1.6	(223)	02/96→		RUN50D	MAG50D-MAG45D	ETS50ND-ETS45ND	ETS50D3N-ETS50D4N	436210ES
EXPERT Flatbed / Chassis 1.9 D	(223)	06/98→11/03		RUN62D	MAG62D	ETS62ND	ETS60D3N	438320ES
EXPERT Flatbed / Chassis 1.9 D	(223)	02/96→		RUN72D				
EXPERT Flatbed / Chassis 1.9 TD	(223)	02/96→		RUN72D				
EXPERT Flatbed / Chassis 1.9 TD	(223)	02/96→		RUN72D				
EXPERT Flatbed / Chassis 2.0 HDi	(223)	10/00→10/06		RUN72D				
EXPERT Flatbed / Chassis 2.0 HDi	(223)	10/00→11/03		RUN72D				
EXPERT Tepee 2.0 16V	(VF3V_)	01/07→		RUN62D	MAG62D	ETS62ND	ETS60D3N	438320ES
EXPERT Tepee 1.6 HDi 90	(VF3V_)	01/07→		RUN62D	MAG62D	ETS62ND	ETS60D3N	438320ES
EXPERT Tepee 2.0 HDi 120	(VF3V_)	01/07→		RUN72D	MAG74D	ETS74ND	ETS70D1N-ETS74DI	476420ES
EXPERT Tepee 2.0 HDi 140	(VF3V_)	01/07→		RUN72D	MAG74D	ETS74ND	ETS70D1N-ETS74DI	476420ES
EXPERT Tepee 2.0 HDi 165	(VF3V_)	09/09→		RUN72D				
EXPERT Box 2.0 16V	(VF3A_, VF3U_, VF3X_)	01/07→		RUN62D	MAG62D	ETS62ND	ETS60D3N	438320ES
EXPERT Box 1.6 HDi 90	(VF3A_, VF3U_, VF3X_)	01/07→		RUN62D	MAG62D	ETS62ND	ETS60D3N	438320ES
EXPERT Box 2.0 HDi 120	(VF3A_, VF3U_, VF3X_)	01/07→		RUN72D				
EXPERT Box 2.0 HDi 140	(VF3A_, VF3U_, VF3X_)	01/07→		RUN72D				
EXPERT Box 2.0 HDi 165	(VF3A_, VF3U_, VF3X_)	09/09→		RUN72D				
EXPERT Flatbed / Chassis 1.6 HDi 90		01/07→		RUN62D	MAG62D	ETS62ND	ETS60D3N	438320ES
EXPERT Flatbed / Chassis 2.0 HDi 120		01/07→		RUN72D				
EXPERT Flatbed / Chassis 2.0 HDi 140		01/07→		RUN72D				
PARTNER Combispace 1.1	(5F)	06/96→		RUN50D	MAG50D-MAG45D	ETS50ND-ETS45ND	ETS50D3N-ETS50D4N	436210ES
PARTNER Combispace 1.4	(5F)	11/02→10/06		RUN50D				
PARTNER Combispace 1.4	(5F)	06/96→		RUN50D	MAG50D-MAG45D	ETS50ND-ETS45ND	ETS50D3N-ETS50D4N	436210ES
PARTNER Combispace 1.6 16V	(5F)	07/01→		RUN50D				
PARTNER Combispace 1.8	(5F)	05/97→		RUN50D	MAG50D	ETS50ND	ETS50D3N-ETS50D4N	
PARTNER Combispace 1.6 HDi 75	(5F)	02/06→		RUN62D	MAG62D	ETS62ND	ETS60D3N	438320ES
PARTNER Combispace 1.6 HDi 90	(5F)	02/06→		RUN62D	MAG62D	ETS62ND	ETS60D3N	438320ES
PARTNER Combispace 1.9 D	(5F)	06/96→		RUN62D	MAG62D	ETS62ND	ETS60D3N	438320ES
PARTNER Combispace 1.9 D	(5F)	12/98→		RUN62D	MAG62D	ETS62ND	ETS60D3N	438320ES

	Design		START	RUN	MAGIS	ETS	ETS alternative	ES
PEUGEOT								
PARTNER Combispace 1.9 D 4x4	(5F)	04/04→08/05		RUN62D	MAG62D	ETS62ND	ETS60D3N	438320ES
PARTNER Combispace 1.9 D	(5F)	05/96→12/98		RUN62D	MAG62D	ETS62ND	ETS60D3N	438320ES
PARTNER Combispace 2.0 HDI	(5F)	02/00→		RUN62D	MAG62D	ETS62ND	ETS60D3N	438320ES
PARTNER Combispace 2.0 HDi 4x4	(5F)	04/04→08/05		RUN62D	MAG62D	ETS62ND	ETS60D3N	438320ES
PARTNER Box 1.1	(5)	06/96→		RUN50D	MAG50D-MAG45D	ETS50ND-ETS45ND	ETS50D3N-ETS50D4N	436210ES
PARTNER Box 1.4	(5)	11/02→10/06		RUN50D	MAG50D	ETS50ND	ETS50D3N-ETS50D4N	
PARTNER Box 1.4	(5)	06/96→		RUN50D	MAG50D	ETS50ND	ETS50D3N-ETS50D4N	
PARTNER Box 1.4 BiFuel	(5)	04/03→		RUN50D	MAG50D	ETS50ND	ETS50D3N-ETS50D4N	
PARTNER Box 1.6	(5)	09/00→10/02		RUN50D	MAG50D	ETS50ND	ETS50D3N-ETS50D4N	
PARTNER Box 1.6 HDi 75	(5)	02/06→		RUN62D	MAG62D	ETS62ND	ETS60D3N	438320ES
PARTNER Box 1.6 HDi 90	(5)	02/06→		RUN62D	MAG62D	ETS62ND	ETS60D3N	438320ES
PARTNER Box 1.8 D	(5)	06/96→		RUN62D	MAG62D	ETS62ND	ETS60D3N	438320ES
PARTNER Box 1.8 D	(5)	11/96→02/98		RUN62D	MAG62D	ETS62ND	ETS60D3N	438320ES
PARTNER Box 1.9 D	(5)	05/96→12/98		RUN62D	MAG62D	ETS62ND	ETS60D3N	438320ES
PARTNER Box 1.9 D	(5)	06/96→		RUN62D	MAG62D	ETS62ND	ETS60D3N	438320ES
PARTNER Box 1.9 D 4x4	(5)	04/04→		RUN62D	MAG62D	ETS62ND	ETS60D3N	438320ES
PARTNER Box 1.9 D	(5)	06/96→		RUN62D	MAG62D	ETS62ND	ETS60D3N	438320ES
PARTNER Box 2.0 HDi	(5)	04/00→		RUN62D	MAG62D	ETS62ND	ETS60D3N	438320ES
PARTNER Box 2.0 HDi 4x4	(5)	04/04→		RUN62D	MAG62D	ETS62ND	ETS60D3N	438320ES
PARTNER Tepee 1.6		04/08→		RUN50D	MAG50D	ETS50ND	ETS50D3N-ETS50D4N	
PARTNER Tepee 1.6		04/08→		RUN50D	MAG50D	ETS50ND	ETS50D3N-ETS50D4N	
PARTNER Tepee 1.6 HDi		04/08→		RUN62D	MAG62D	ETS62ND	ETS60D3N	438320ES
PARTNER Tepee 1.6 HDi		04/08→		RUN62D	MAG62D	ETS62ND	ETS60D3N	438320ES
PARTNER Tepee 1.6 HDi		04/08→		RUN62D	MAG62D	ETS62ND	ETS60D3N	438320ES
PARTNER Box 1.6		04/08→		RUN50D	MAG50D	ETS50ND	ETS50D3N-ETS50D4N	
PARTNER Box 1.6		04/08→		RUN50D	MAG50D	ETS50ND	ETS50D3N-ETS50D4N	
PARTNER Box 1.6 HDi		04/08→		RUN62D	MAG62D	ETS62ND	ETS60D3N	438320ES
PARTNER Box 1.6 HDi		04/08→		RUN62D	MAG62D	ETS62ND	ETS60D3N	438320ES
PARTNER Box 1.6 HDi		04/08→		RUN62D	MAG62D	ETS62ND	ETS60D3N	438320ES
BOXER Bus 2.0 i	(230P)	03/94→04/02		RUN72D	MAG74D	ETS74ND	ETS70D1N-ETS74DI	476420ES
BOXER Bus 2.0 i 4x4	(230P)	08/96→04/02		RUN72D	MAG74D	ETS74ND	ETS70D1N-ETS74DI	476420ES
BOXER Bus 1.9 D	(230P)	03/94→04/02		RUN72D	MAG74D	ETS74ND	ETS70D1N-ETS74DI	476420ES
BOXER Bus 1.9 TD	(230P)	08/94→04/02		RUN72D	MAG74D	ETS74ND	ETS70D1N-ETS74DI	476420ES
BOXER Bus 1.9 TD	(230P)	03/94→04/02		RUN72D	MAG74D	ETS74ND	ETS70D1N-ETS74DI	476420ES
BOXER Bus 1.9 TD 4x4	(230P)	07/96→04/02		RUN72D	MAG74D	ETS74ND	ETS70D1N-ETS74DI	476420ES
BOXER Bus 2.5 D	(230P)	08/94→04/02		RUN95D		ETS92ND-ETS95D1N		434440ES
BOXER Bus 2.5 D 4x4	(230P)	07/96→04/02		RUN95D		ETS92ND-ETS95D1N		434440ES
BOXER Bus 2.5 TD	(230P)	07/94→04/02		RUN95D		ETS92ND-ETS95D1N		434440ES
BOXER Bus 2.5 TD 4x4	(230P)	07/96→04/02		RUN95D		ETS92ND-ETS95D1N		434440ES
BOXER Bus 2.5 TDI	(230P)	01/97→04/02		RUN95D		ETS92ND-ETS95D1N		434440ES
BOXER Bus 2.5 TDI 4x4	(230P)	01/97→04/02		RUN95D		ETS92ND-ETS95D1N		434440ES
BOXER Bus 2.5 DT	(230P)	10/97→11/01		RUN95D		ETS92ND-ETS95D1N		434440ES
BOXER Bus 2.8 DTiC	(230P)	10/97→09/00		RUN95D		ETS92ND-ETS95D1N		434440ES
BOXER Bus 2.8 HDi	(230P)	10/00→11/01				ETS110D1N		
BOXER Bus 2.8 HDi All-wheel Drive	(230P)	10/00→11/01		RUN95D		ETS92ND-ETS95D1N		434440ES
BOXER Bus 2.8 HDI	(230P)	11/00→04/02				ETS110D1N		
BOXER Bus 2.8 HDi 4x4	(230P)	10/00→04/02		RUN95D		ETS92ND-ETS95D1N		434440ES

	Design		START	RUN	MAGIS	ETS	ETS alternative	ES
PEUGEOT								
BOXER Box 2.0 i	(230L)	06/94→04/02		RUN62D	MAG62D	ETS62ND	ETS60D3N	438320ES
BOXER Box 2.0 4x4	(230L)	03/96→09/98		RUN72D	MAG74D	ETS74ND	ETS70D1N-ETS74DI	476420ES
BOXER Box 1.9 D	(230L)	07/99→04/02		RUN72D				
BOXER Box 1.9 D	(230L)	03/94→04/02		RUN72D				
BOXER Box 1.9 TD	(230L)	07/99→04/02		RUN72D				
BOXER Box 1.9 TD	(230L)	03/94→04/02		RUN72D				
BOXER Box 2.0 HDI	(230L)	08/01→04/02		RUN95D				
BOXER Box 2.5 D	(230L)	03/94→04/02		RUN95D		ETS92ND-ETS95D1N		434440ES
BOXER Box 2.5 D 4x4	(230L)	07/99→04/02		RUN95D		ETS92ND-ETS95D1N		434440ES
BOXER Box 2.5 TD	(230L)	03/94→04/02		RUN95D		ETS92ND-ETS95D1N		434440ES
BOXER Box 2.5 TDI	(230L)	01/97→04/02		RUN95D		ETS92ND-ETS95D1N		434440ES
BOXER Box 2.5 TDI 4x4	(230L)	07/99→04/02		RUN95D		ETS92ND-ETS95D1N		434440ES
BOXER Box 2.5 DT	(230L)	10/97→11/01		RUN95D		ETS92ND-ETS95D1N		434440ES
BOXER Box 2.8 DTiC	(230L)	10/97→09/00		RUN95D		ETS92ND-ETS95D1N		434440ES
BOXER Box 2.8 HDi	(230L)	10/00→11/01		RUN95D		ETS92ND-ETS95D1N		434440ES
BOXER Box 2.8 HDi 4x4	(230L)	10/00→11/01		RUN95D		ETS92ND-ETS95D1N		434440ES
BOXER Box 2.8 HDI	(230L)	11/00→04/02		RUN95D		ETS92ND-ETS95D1N		434440ES
BOXER Box 2.8 HDi 4x4	(230L)	10/00→04/02		RUN95D		ETS92ND-ETS95D1N		434440ES
BOXER Flatbed / Chassis 2.0 i	(ZCT_)	06/94→04/02		RUN72D				
BOXER Flatbed / Chassis 1.9 TD	(ZCT_)	12/98→04/02		RUN72D				
BOXER Flatbed / Chassis 1.9 TD	(ZCT_)	07/96→04/02		RUN72D				
BOXER Flatbed / Chassis 2.5 D	(ZCT_)	03/94→04/02		RUN95D		ETS92ND-ETS95D1N		434440ES
BOXER Flatbed / Chassis 2.5 D 4x4	(ZCT_)	07/99→04/02		RUN95D		ETS92ND-ETS95D1N		434440ES
BOXER Flatbed / Chassis 2.5 TD	(ZCT_)	03/94→04/02		RUN95D		ETS92ND-ETS95D1N		434440ES
BOXER Flatbed / Chassis 2.5 TDI	(ZCT_)	01/97→04/02		RUN95D		ETS92ND-ETS95D1N		434440ES
BOXER Flatbed / Chassis 2.5 TDI 4x4	(ZCT_)	07/99→04/02		RUN95D		ETS92ND-ETS95D1N		434440ES
BOXER Flatbed / Chassis 2.8 HDi	(ZCT_)	10/00→11/01		RUN95D		ETS92ND-ETS95D1N		434440ES
BOXER Flatbed / Chassis 2.8 HDi All-wheel Drive	(ZCT_)	10/00→11/01		RUN95D		ETS92ND-ETS95D1N		434440ES
BOXER Flatbed / Chassis 2.8 HDI	(ZCT_)	11/00→04/02		RUN95D		ETS92ND-ETS95D1N		434440ES
BOXER Bus 2.0	(244, Z_)	04/02→		RUN72D				
BOXER Bus 2.0 HDi	(244, Z_)	04/02→		RUN72D				
BOXER Bus 2.2 HDi	(244, Z_)	04/02→		RUN72D				
BOXER Bus 2.8 HDi	(244, Z_)	04/02→		RUN95D		ETS92ND-ETS95D1N		434440ES
BOXER Bus 2.8 HDi 4x4	(244, Z_)	04/02→		RUN95D		ETS92ND-ETS95D1N		434440ES
BOXER Box 2.0	(244)	04/02→		RUN62D	MAG62D	ETS62ND	ETS60D3N	438320ES
BOXER Box 2.0 HDi	(244)	04/02→		RUN72D	MAG74D	ETS74ND	ETS70D1N-ETS74DI	476420ES
BOXER Box 2.2 HDi	(244)	04/02→		RUN72D	MAG74D	ETS74ND	ETS70D1N-ETS74DI	476420ES
BOXER Box 2.8 HDi	(244)	04/02→		RUN95D		ETS92ND-ETS95D1N		434440ES
BOXER Box 2.8 HDi 4x4	(244)	04/02→		RUN95D		ETS92ND-ETS95D1N		434440ES
BOXER Box 2.8 HDi	(244)	04/04→		RUN95D				
BOXER Flatbed / Chassis 2.0 HDi	(244)	04/02→		RUN72D	MAG74D	ETS74ND	ETS70D1N-ETS74DI	476420ES
BOXER Flatbed / Chassis 2.2 HDi	(244)	04/02→		RUN72D	MAG74D	ETS74ND	ETS70D1N-ETS74DI	476420ES
BOXER Flatbed / Chassis 2.8 HDi	(244)	04/02→		RUN95D		ETS92ND-ETS95D1N		434440ES
BOXER Flatbed / Chassis 2.8 HDi 4x4	(244)	04/02→		RUN95D		ETS92ND-ETS95D1N		434440ES
BOXER Flatbed / Chassis 2.8 HDi	(244)	04/04→		RUN95D				
BOXER Bus 2.2 HDi 100		04/06→		RUN95D		ETS92ND-ETS95D1N		434440ES

	Design		START	RUN	MAGIS	ETS	ETS alternative	ES
PEUGEOT								
BOXER Bus 2.2 HDi 120		04/06→		RUN95D		ETS92ND-ETS95D1N		434440ES
BOXER Bus 3.0 HDi		04/10→				ETS110D1N		
BOXER Bus 3.0 HDi 160		04/06→				ETS110D1N		
BOXER Box 2.2 HDi 100		04/06→	AGM70D			ETS110D1N		
BOXER Box 2.2 HDi 120		04/06→	AGM70D			ETS110D1N		
BOXER Box 3.0 D		07/06→				ETS110D1N		
BOXER Box 3.0 HDi		04/10→				ETS110D1N		
BOXER Box 3.0 HDi 160		04/06→				ETS110D1N		
BOXER Flatbed / Chassis 2.2 HDi 100		04/06→				ETS110D1N		
BOXER Flatbed / Chassis 2.2 HDi 120		04/06→				ETS110D1N		
BOXER Flatbed / Chassis 3.0 D		02/07→		RUN72D	MAG74D	ETS74ND	ETS70D1N-ETS74DI	476420ES
BOXER Flatbed / Chassis 3.0 HDi		04/10→		RUN72D				
BOXER Flatbed / Chassis 3.0 HDi 160		04/06→				ETS110D1N		
J5 Bus 2.0	(290P)	10/90→		RUN72D	MAG74D	ETS74ND	ETS70D1N-ETS74DI	476420ES
J5 Bus 1.9 D	(290P)	10/90→		RUN95D		ETS92ND-ETS95D1N		434440ES
J5 Bus 2.5 D	(290P)	10/90→		RUN95D		ETS92ND-ETS95D1N		434440ES
J5 Bus 2.5 D 4x4	(290P)	10/90→		RUN95D		ETS92ND-ETS95D1N		434440ES
J5 Bus 2.5 TD	(290P)	10/90→		RUN95D		ETS92ND-ETS95D1N		434440ES
J5 Bus 2.5 TD 4x4	(290P)	10/90→		RUN95D		ETS92ND-ETS95D1N		434440ES
J5 Box 1.9 D	(290L)	10/90→		RUN72D	MAG74D	ETS74ND	ETS70D1N-ETS74DI	476420ES
J5 Box 2.5 D 4x4	(290L)	10/90→		RUN95D		ETS92ND-ETS95D1N		434440ES
J5 Box 2.5 TD 4x4	(290L)	10/90→		RUN95D		ETS92ND-ETS95D1N		434440ES
J5 Flatbed / Chassis 2.0	(290L)	10/90→				ETS55NS		
J5 Flatbed / Chassis 1.9 D	(290L)	10/90→		RUN72D	MAG74D	ETS74ND	ETS70D1N-ETS74DI	476420ES
J5 Flatbed / Chassis 2.5 D	(290L)	10/90→		RUN95D		ETS92ND-ETS95D1N		434440ES
J5 Flatbed / Chassis 2.5 D 4x4	(290L)	10/90→		RUN95D		ETS92ND-ETS95D1N		434440ES
J5 Flatbed / Chassis 2.5 TD	(290L)	10/90→		RUN95D		ETS92ND-ETS95D1N		434440ES
J5 Flatbed / Chassis 2.5 TD 4x4	(290L)	10/90→		RUN95D		ETS92ND-ETS95D1N		434440ES
PIAGGIO								
PORTER Box 1.3 i 16V		05/98→						ES45330D
PORTER Box 1.3 i 16V 4x4		05/98→						ES45330D
PORTER Box 1.2 D		05/95→		RUN62D	MAG62D	ETS62ND	ETS60D3N	438320ES
PORTER Box 1.4 D		04/98→		RUN62D	MAG62D	ETS62ND	ETS60D3N	438320ES
PORTER Flatbed / Chassis 1.3 i 16V		05/98→						ES45330D
PORTER Flatbed / Chassis 1.3 i 16V 4x4		05/98→						ES45330D
PORTER Flatbed / Chassis 1.2 D		05/95→		RUN62D	MAG62D	ETS62ND	ETS60D3N	438320ES
PORTER Flatbed / Chassis 1.4 D		04/98→		RUN62D	MAG62D	ETS62ND	ETS60D3N	438320ES
PLYMOUTH								
BREEZE 2.0 16V		12/95→		RUN72D	MAG74D	ETS74ND	ETS70D1N-ETS74DI	476420ES
BREEZE 2.4 16 V		12/95→04/01		RUN72D	MAG74D	ETS74ND	ETS70D1N-ETS74DI	476420ES
BREEZE 2.4 16V		12/95→		RUN72D	MAG74D	ETS74ND	ETS70D1N-ETS74DI	476420ES
NEON Saloon 2.0 16V		05/94→08/99		RUN72D	MAG74D	ETS74ND	ETS70D1N-ETS74DI	476420ES
NEON Saloon 2.0 16V		06/94→08/99		RUN72D	MAG74D	ETS74ND	ETS70D1N-ETS74DI	476420ES
NEON Saloon 2.0 16V		04/96→08/99		RUN72D	MAG74D	ETS74ND	ETS70D1N-ETS74DI	476420ES
NEON Coupe 2.0		10/94→09/99		RUN72D	MAG74D	ETS74ND	ETS70D1N-ETS74DI	476420ES

	Design		START	RUN	MAGIS	ETS	ETS alternative	ES
PLYMOUTH								
NEON Coupe 2.0		10/94→09/99		RUN72D	MAG74D	ETS74ND	ETS70D1N-ETS74DI	476420ES
NEON II Saloon 2.0 16V		08/99→		RUN72D	MAG74D	ETS74ND	ETS70D1N-ETS74DI	476420ES
NEON II Saloon 2.0 16V		09/99→		RUN72D	MAG74D	ETS74ND	ETS70D1N-ETS74DI	476420ES
VOYAGER 2.0 i		01/95→03/01		RUN72D	MAG74D	ETS74ND	ETS70D1N-ETS74DI	476420ES
VOYAGER 2.4 i		01/95→03/01		RUN72D	MAG74D	ETS74ND	ETS70D1N-ETS74DI	476420ES
VOYAGER 3.0		01/95→03/01		RUN72D	MAG74D	ETS74ND	ETS70D1N-ETS74DI	476420ES
VOYAGER 3.3 i		01/95→03/01		RUN72D	MAG74D	ETS74ND	ETS70D1N-ETS74DI	476420ES
VOYAGER 3.8 i		01/95→03/01		RUN72D	MAG74D	ETS74ND	ETS70D1N-ETS74DI	476420ES
VOYAGER 3.8 i AWD		01/95→03/01		RUN72D	MAG74D	ETS74ND	ETS70D1N-ETS74DI	476420ES
VOYAGER 3.8 i		01/95→03/01		RUN72D	MAG74D	ETS74ND	ETS70D1N-ETS74DI	476420ES
VOYAGER 3.8 i AWD		01/95→03/01		RUN72D	MAG74D	ETS74ND	ETS70D1N-ETS74DI	476420ES
VOYAGER 2.5 TD		01/95→03/01		RUN72D	MAG74D	ETS74ND	ETS70D1N-ETS74DI	476420ES
PORSCHE								
911 3.3 Turbo	(964)	08/90→09/93		RUN72D	MAG74D	ETS74ND	ETS70D1N-ETS74DI	476420ES
911 3.3 Turbo S	(964)	06/91→12/92		RUN72D	MAG74D	ETS74ND	ETS70D1N-ETS74DI	476420ES
911 3.6 Carrera RS	(964)	06/91→09/93		RUN72D	MAG74D	ETS74ND	ETS70D1N-ETS74DI	476420ES
911 3.6 Turbo	(964)	01/93→09/93		RUN72D	MAG74D	ETS74ND	ETS70D1N-ETS74DI	476420ES
911 3.6 Carrera	(993)	10/93→08/95		RUN72D	MAG74D	ETS74ND	ETS70D1N-ETS74DI	476420ES
911 3.6 Carrera 4	(993)	07/94→08/95		RUN72D	MAG74D	ETS74ND	ETS70D1N-ETS74DI	476420ES
911 3.6 Carrera	(993)	08/95→09/97		RUN72D	MAG74D	ETS74ND	ETS70D1N-ETS74DI	476420ES
911 3.6 Carrera 4	(993)	08/95→09/97		RUN72D	MAG74D	ETS74ND	ETS70D1N-ETS74DI	476420ES
911 3.6 Turbo 4	(993)	03/95→09/97		RUN72D	MAG74D	ETS74ND	ETS70D1N-ETS74DI	476420ES
911 3.6 Turbo GT2	(993)	03/95→09/97		RUN72D	MAG74D	ETS74ND	ETS70D1N-ETS74DI	476420ES
911 3.6 Turbo GT2 4	(993)	08/95→09/97		RUN72D	MAG74D	ETS74ND	ETS70D1N-ETS74DI	476420ES
911 3.6 Turbo GT2 4	(993)	06/97→09/97		RUN72D	MAG74D	ETS74ND	ETS70D1N-ETS74DI	476420ES
911 3.8 Carrera	(993)	06/95→09/97		RUN72D	MAG74D	ETS74ND	ETS70D1N-ETS74DI	476420ES
911 3.8 Carrera 4	(993)	06/95→09/97		RUN72D	MAG74D	ETS74ND	ETS70D1N-ETS74DI	476420ES
911 3.8 Carrera RS	(993)	06/95→09/97		RUN72D	MAG74D	ETS74ND	ETS70D1N-ETS74DI	476420ES
911 3.8 Carrera RS 4	(993)	08/95→09/97		RUN72D	MAG74D	ETS74ND	ETS70D1N-ETS74DI	476420ES
911 Targa 3.6 Carrera	(993)	08/95→09/97		RUN72D	MAG74D	ETS74ND	ETS70D1N-ETS74DI	476420ES
911 Targa 3.7 Carrera	(993)	05/96→09/97		RUN72D	MAG74D	ETS74ND	ETS70D1N-ETS74DI	476420ES
911 Convertible 3.6 Carrera	(993)	07/94→08/95		RUN72D	MAG74D	ETS74ND	ETS70D1N-ETS74DI	476420ES
911 Convertible 3.6 Carrera 4	(993)	07/94→08/95		RUN72D	MAG74D	ETS74ND	ETS70D1N-ETS74DI	476420ES
911 Convertible 3.6 Carrera	(993)	08/95→09/97		RUN72D	MAG74D	ETS74ND	ETS70D1N-ETS74DI	476420ES
911 Convertible 3.6 Carrera 4	(993)	08/95→09/97		RUN72D	MAG74D	ETS74ND	ETS70D1N-ETS74DI	476420ES
911 Convertible 3.8 Carrera	(993)	06/95→09/97		RUN72D	MAG74D	ETS74ND	ETS70D1N-ETS74DI	476420ES
911 Convertible 3.8 Carrera 4	(993)	06/95→09/97		RUN72D	MAG74D	ETS74ND	ETS70D1N-ETS74DI	476420ES
911 Convertible 3.8 Carrera RS	(993)	08/95→09/97		RUN72D	MAG74D	ETS74ND	ETS70D1N-ETS74DI	476420ES
911 Convertible 3.8 Carrera RS 4	(993)	08/95→09/97		RUN72D	MAG74D	ETS74ND	ETS70D1N-ETS74DI	476420ES
911 3.4 Carrera	(996)	09/97→09/01	AGM70D	RUN72D	MAG74D	ETS74ND	ETS70D1N-ETS74DI	476420ES
911 3.4 Carrera 4	(996)	09/97→09/01	AGM70D	RUN72D	MAG74D	ETS74ND	ETS70D1N-ETS74DI	476420ES
911 3.4 Carrera	(996)	05/01→08/05		RUN72D	MAG74D	ETS74ND	ETS70D1N-ETS74DI	476420ES
911 3.4 Carrera 4	(996)	05/01→08/05		RUN72D	MAG74D	ETS74ND	ETS70D1N-ETS74DI	476420ES
911 3.6 Carrera	(996)	10/01→08/05		RUN72D	MAG74D	ETS74ND	ETS70D1N-ETS74DI	476420ES
911 3.6 Carrera 4	(996)	10/01→08/05		RUN72D	MAG74D	ETS74ND	ETS70D1N-ETS74DI	476420ES
911 3.6 Carrera S	(996)	02/03→08/05		RUN72D	MAG74D	ETS74ND	ETS70D1N-ETS74DI	476420ES

	Design		START	RUN	MAGIS	ETS	ETS alternative	ES
PORSCHE								
911 3.6 Carrera 4S	(996)	02/03→08/05		RUN72D	MAG74D	ETS74ND	ETS70D1N-ETS74DI	476420ES
911 3.6 GT3	(996)	03/99→08/05	AGM70D	RUN72D	MAG74D	ETS74ND	ETS70D1N-ETS74DI	476420ES
911 3.6 GT3	(996)	03/03→08/05		RUN72D	MAG74D	ETS74ND	ETS70D1N-ETS74DI	476420ES
911 3.6 Turbo 4	(996)	06/00→08/05		RUN72D	MAG74D	ETS74ND	ETS70D1N-ETS74DI	476420ES
911 3.6 S	(996)	08/04→08/05		RUN72D	MAG74D	ETS74ND	ETS70D1N-ETS74DI	476420ES
911 3.6 Turbo 4S	(996)	02/03→08/05		RUN72D	MAG74D	ETS74ND	ETS70D1N-ETS74DI	476420ES
911 3.6 GT2	(996)	04/01→08/05		RUN72D	MAG74D	ETS74ND	ETS70D1N-ETS74DI	476420ES
911 3.6 GT2	(996)	10/03→08/05		RUN72D	MAG74D	ETS74ND	ETS70D1N-ETS74DI	476420ES
911 Convertible 3.4 Carrera	(996)	02/98→09/01		RUN72D	MAG74D	ETS74ND	ETS70D1N-ETS74DI	476420ES
911 Convertible 3.4 Carrera 4	(996)	02/98→09/01		RUN72D	MAG74D	ETS74ND	ETS70D1N-ETS74DI	476420ES
911 Convertible 3.4 Carrera	(996)	05/01→08/05		RUN72D	MAG74D	ETS74ND	ETS70D1N-ETS74DI	476420ES
911 Convertible 3.4 Carrera 4	(996)	05/01→08/05		RUN72D	MAG74D	ETS74ND	ETS70D1N-ETS74DI	476420ES
911 Convertible 3.6 Carrera	(996)	10/01→08/05		RUN72D	MAG74D	ETS74ND	ETS70D1N-ETS74DI	476420ES
911 Convertible 3.6 Carrera 4	(996)	10/01→08/05		RUN72D	MAG74D	ETS74ND	ETS70D1N-ETS74DI	476420ES
911 Convertible 3.6 Carrera S	(996)	06/02→08/05		RUN72D	MAG74D	ETS74ND	ETS70D1N-ETS74DI	476420ES
911 Convertible 3.6 Carrera 4S	(996)	06/02→08/05		RUN72D	MAG74D	ETS74ND	ETS70D1N-ETS74DI	476420ES
911 Convertible 3.6 Turbo 4	(996)	10/03→08/05		RUN72D	MAG74D	ETS74ND	ETS70D1N-ETS74DI	476420ES
911 Convertible 3.6 S	(996)	08/04→08/05		RUN72D	MAG74D	ETS74ND	ETS70D1N-ETS74DI	476420ES
911 Convertible 3.6 Turbo 4S	(996)	10/03→08/05		RUN72D	MAG74D	ETS74ND	ETS70D1N-ETS74DI	476420ES
911 Targa 3.6	(996)	12/01→08/05	AGM70D	RUN72D	MAG74D	ETS74ND	ETS70D1N-ETS74DI	476420ES
911 3.6 Carrera	(997)	07/04→		RUN72D	MAG74D	ETS74ND	ETS70D1N-ETS74DI	476420ES
911 3.6 Carrera 4	(997)	07/04→		RUN72D	MAG74D	ETS74ND	ETS70D1N-ETS74DI	476420ES
911 3.6 Carrera	(997)	06/08→		RUN72D	MAG74D	ETS74ND	ETS70D1N-ETS74DI	476420ES
911 3.6 Carrera 4	(997)	06/08→		RUN72D	MAG74D	ETS74ND	ETS70D1N-ETS74DI	476420ES
911 3.6 GT 3	(997)	03/06→		RUN72D	MAG74D	ETS74ND	ETS70D1N-ETS74DI	476420ES
911 3.6 Turbo	(997)	03/06→		RUN72D	MAG74D	ETS74ND	ETS70D1N-ETS74DI	476420ES
911 3.6 GT 2	(997)	09/07→		RUN72D	MAG74D	ETS74ND	ETS70D1N-ETS74DI	476420ES
911 3.8 GT3	(997)	05/09→		RUN72D	MAG74D	ETS74ND	ETS70D1N-ETS74DI	476420ES
911 3.8 Carrera S	(997)	07/04→		RUN72D	MAG74D	ETS74ND	ETS70D1N-ETS74DI	476420ES
911 3.8 Carrera 4S	(997)	07/04→	AGM70D	RUN72D	MAG74D	ETS74ND	ETS70D1N-ETS74DI	476420ES
911 3.8 Carrera S	(997)	08/05→		RUN72D	MAG74D	ETS74ND	ETS70D1N-ETS74DI	476420ES
911 3.8 Carrera 4S	(997)	08/05→		RUN72D	MAG74D	ETS74ND	ETS70D1N-ETS74DI	476420ES
911 3.8 Carrera S	(997)	06/08→		RUN72D	MAG74D	ETS74ND	ETS70D1N-ETS74DI	476420ES
911 3.8 Carrera 4S	(997)	06/08→		RUN72D	MAG74D	ETS74ND	ETS70D1N-ETS74DI	476420ES
911 Convertible 3.6 Carrera	(997)	04/05→		RUN72D	MAG74D	ETS74ND	ETS70D1N-ETS74DI	476420ES
911 Convertible 3.6 Carrera 4	(997)	04/05→		RUN72D	MAG74D	ETS74ND	ETS70D1N-ETS74DI	476420ES
911 Convertible 3.6 Carrera	(997)	06/08→		RUN72D	MAG74D	ETS74ND	ETS70D1N-ETS74DI	476420ES
911 Convertible 3.6 Carrera 4	(997)	06/08→		RUN72D	MAG74D	ETS74ND	ETS70D1N-ETS74DI	476420ES
911 Convertible 3.6 Turbo	(997)	09/07→		RUN72D	MAG74D	ETS74ND	ETS70D1N-ETS74DI	476420ES
911 Convertible 3.8 Carrera S	(997)	04/05→		RUN72D	MAG74D	ETS74ND	ETS70D1N-ETS74DI	476420ES
911 Convertible 3.8 Carrera 4S	(997)	04/05→		RUN72D	MAG74D	ETS74ND	ETS70D1N-ETS74DI	476420ES
911 Convertible 3.8 Carrera S	(997)	08/05→		RUN72D	MAG74D	ETS74ND	ETS70D1N-ETS74DI	476420ES
911 Convertible 3.8 Carrera 4S	(997)	08/05→		RUN72D	MAG74D	ETS74ND	ETS70D1N-ETS74DI	476420ES
911 Convertible 3.8 Carrera S	(997)	06/08→		RUN72D	MAG74D	ETS74ND	ETS70D1N-ETS74DI	476420ES
911 Convertible 3.8 Carrera 4S	(997)	06/08→		RUN72D	MAG74D	ETS74ND	ETS70D1N-ETS74DI	476420ES
911 Targa 3.6 Carrera 4	(997)	11/06→		RUN72D	MAG74D	ETS74ND	ETS70D1N-ETS74DI	476420ES
911 Targa 3.6 Carrera 4	(997)	06/08→		RUN72D	MAG74D	ETS74ND	ETS70D1N-ETS74DI	476420ES

	Design		START	RUN	MAGIS	ETS	ETS alternative	ES
PORSCHE								
911 Targa 3.8 Carrera 4S	(997)	11/06→	AGM70D	RUN72D	MAG74D	ETS74ND	ETS70D1N-ETS74DI	476420ES
911 Targa 3.8 Carrera 4S	(997)	06/08→		RUN72D	MAG74D	ETS74ND	ETS70D1N-ETS74DI	476420ES
928 5.4 GTS		08/91→11/95		RUN72D	MAG74D	ETS74ND	ETS70D1N-ETS74DI	476420ES
944 Convertible 2.5 Turbo		11/90→07/91			MAG72DB	ETS71NDB		
968 3.0		06/91→11/95			MAG72DB	ETS71NDB		
968 3.0 Turbo S		03/93→11/95			MAG72DB	ETS71NDB		
968 Convertible 3.0		06/91→11/95			MAG72DB	ETS71NDB		
CARRERA GT 5.7		07/03→		RUN72D	MAG74D	ETS74ND	ETS70D1N-ETS74DI	476420ES
CAYENNE 3.2	(955)	08/03→				ETS110D1N		
CAYENNE 3.2	(955)	10/03→	AGM90D			ETS110D1N		
CAYENNE 3.6	(955)	02/07→	AGM90D			ETS110D1N		
CAYENNE S 4.5	(955)	09/02→				ETS110D1N		
CAYENNE Turbo 4.5	(955)	09/02→				ETS110D1N		
CAYENNE Turbo S 4.5	(955)	01/04→				ETS110D1N		
CAYENNE Turbo S 4.5	(955)	03/06→				ETS110D1N		
CAYENNE S 4.8	(955)	02/07→				ETS110D1N		
CAYENNE GTS 4.8	(955)	10/07→		RUN95D		ETS92ND-ETS95D1N		434440ES
CAYENNE Turbo S 4.8	(955)	02/07→				ETS110D1N		
CAYENNE Turbo S 4.8	(955)	02/07→				ETS110D1N		
CAYENNE Turbo S 4.8	(955)	08/08→				ETS110D1N		
CAYENNE 3.6		06/10→				ETS110D1N		
CAYENNE S 4.8		06/10→				ETS110D1N		
CAYMAN 2.9		02/09→		RUN72D	MAG74D	ETS74ND	ETS70D1N-ETS74DI	476420ES
CAYMAN S 3.4		11/05→			MAG82D	ETS80ND		
CAYMAN S 3,4 Sport		08/08→			MAG82D	ETS80ND		
PROTON								
GEN 2 1.3	(CM_)	06/04→			MAG62DB	ETS60NDB-ETS50NDB		ES60NDB
GEN 2 1.3	(CM_)	06/04→			MAG62DB	ETS60NDB-ETS50NDB		ES60NDB
GEN 2 1.6	(CM_)	06/04→			MAG62DB	ETS60NDB-ETS50NDB		ES60NDB
SAVVY 1.2		10/05→						ES45300D
PUCH								
G-MODELL 230 GE	(W 461)	06/93→		RUN62D	MAG62D	ETS62ND	ETS60D3N	438320ES
G-MODELL 290 GD/G 290 D	(W 461)	04/92→		RUN95D		ETS92ND-ETS95D1N		434440ES
G-MODELL G 290 TD	(W 461)	07/97→		RUN95D		ETS92ND-ETS95D1N		434440ES
G-MODELL 230 GE	(W 463)	06/90→06/93		RUN62D	MAG62D	ETS62ND	ETS60D3N	438320ES
G-MODELL 300 GE	(W 463)	06/90→		RUN62D	MAG62D	ETS62ND	ETS60D3N	438320ES
G-MODELL G 320	(W 463)	09/94→12/97		RUN62D	MAG62D	ETS62ND	ETS60D3N	438320ES
G-MODELL G 36 AMG	(W 463)	01/95→		RUN95D		ETS92ND-ETS95D1N		434440ES
G-MODELL G 500	(W 463)	04/98→		RUN95D		ETS92ND-ETS95D1N		434440ES
G-MODELL G 55 AMG	(W 463)	04/99→		RUN95D		ETS92ND-ETS95D1N		434440ES
G-MODELL G 300 TD	(W 463)	08/96→		RUN95D		ETS92ND-ETS95D1N		434440ES
G-MODELL 350 G Turbo D	(W 463)	09/91→		RUN95D		ETS92ND-ETS95D1N		434440ES

	Design		START	RUN	MAGIS	ETS	ETS alternative	ES
RENAULT								
AVANTIME 2.0 16V Turbo (DE0U, DE0V)	(DE0_)	11/01→05/03		RUN72D	MAG74D	ETS74ND	ETS70D1N-ETS74DI	476420ES
AVANTIME 3.0 V6 (DE04, DE0T)	(DE0_)	09/01→05/03		RUN72D	MAG74D	ETS74ND	ETS70D1N-ETS74DI	476420ES
AVANTIME 2.2 dCi (DE01)	(DE0_)	05/02→05/03		RUN72D	MAG74D	ETS74ND	ETS70D1N-ETS74DI	476420ES
CLIO I 1.1	(B/C57_, 5/357_)	01/91→09/98		RUN50D	MAG50D-MAG45D	ETS50ND-ETS45ND	ETS50D3N-ETS50D4N	436210ES
CLIO I 1.1	(B/C57_, 5/357_)	04/92→08/92		RUN50D	MAG50D-MAG45D	ETS50ND-ETS45ND	ETS50D3N-ETS50D4N	436210ES
CLIO I 1.2 (5/357Y, 5/357K)	(B/C57_, 5/357_)	01/96→09/98		RUN50D	MAG50D-MAG45D	ETS50ND-ETS45ND	ETS50D3N-ETS50D4N	436210ES
CLIO I 1.2 (5/357Y, 5/357K)	(B/C57_, 5/357_)	01/96→09/98		RUN50D	MAG50D-MAG45D	ETS50ND-ETS45ND	ETS50D3N-ETS50D4N	436210ES
CLIO I 1.2 (B/C57R)	(B/C57_, 5/357_)	01/91→01/96		RUN50D	MAG50D-MAG45D	ETS50ND-ETS45ND	ETS50D3N-ETS50D4N	436210ES
CLIO I 1.2 (B/C/S57A, B/C57S, 5/357F, 5/357J, 5/357L, 5/357R)	(B/C57_, 5/357_)	05/90→09/98		RUN50D	MAG50D-MAG45D	ETS50ND-ETS45ND	ETS50D3N-ETS50D4N	436210ES
CLIO I 1.2 (B/C/S572)	(B/C57_, 5/357_)	05/90→03/96		RUN50D	MAG50D-MAG45D	ETS50ND-ETS45ND	ETS50D3N-ETS50D4N	436210ES
CLIO I 1.2 (B/C/S577)	(B/C57_, 5/357_)	01/96→12/96		RUN50D	MAG50D-MAG45D	ETS50ND-ETS45ND	ETS50D3N-ETS50D4N	436210ES
CLIO I 1.4 (B57J, C57J)	(B/C57_, 5/357_)	01/91→09/98		RUN50D	MAG50D-MAG45D	ETS50ND-ETS45ND	ETS50D3N-ETS50D4N	436210ES
CLIO I 1.4 (B/C57T, B/C57Y)	(B/C57_, 5/357_)	01/91→09/98		RUN50D	MAG50D-MAG45D	ETS50ND-ETS45ND	ETS50D3N-ETS50D4N	436210ES
CLIO I 1.4	(B/C57_, 5/357_)	01/91→09/98		RUN50D	MAG50D-MAG45D	ETS50ND-ETS45ND	ETS50D3N-ETS50D4N	436210ES
CLIO I 1.7 (B/C574)	(B/C57_, 5/357_)	01/91→12/93		RUN50D	MAG50D	ETS50ND	ETS50D3N-ETS50D4N	
CLIO I 1.8 (B/C57C, B/C57U)	(B/C57_, 5/357_)	01/91→09/98		RUN50D	MAG50D	ETS50ND	ETS50D3N-ETS50D4N	
CLIO I 1.8	(B/C57_, 5/357_)	08/90→04/96		RUN50D	MAG50D	ETS50ND	ETS50D3N-ETS50D4N	
CLIO I 1.8 (B/C578)	(B/C57_, 5/357_)	08/94→09/98		RUN50D	MAG50D	ETS50ND	ETS50D3N-ETS50D4N	
CLIO I 1.8	(B/C57_, 5/357_)	01/91→09/98		RUN50D	MAG50D	ETS50ND	ETS50D3N-ETS50D4N	
CLIO I 1.8 Rsi (B/C57H)	(B/C57_, 5/357_)	08/95→09/98		RUN50D	MAG50D	ETS50ND	ETS50D3N-ETS50D4N	
CLIO I 1.8 Rsi (B/C579)	(B/C57_, 5/357_)	01/93→08/95		RUN50D	MAG50D	ETS50ND	ETS50D3N-ETS50D4N	
CLIO I 1.8 16V (C57D)	(B/C57_, 5/357_)	01/91→03/96		RUN50D	MAG50D	ETS50ND	ETS50D3N-ETS50D4N	
CLIO I Williams (B/C57M)	(B/C57_, 5/357_)	01/94→09/98		RUN50D	MAG50D	ETS50ND	ETS50D3N-ETS50D4N	
CLIO I 1.9 D	(B/C57_, 5/357_)	01/97→09/98		RUN62D	MAG62D	ETS62ND	ETS60D3N	438320ES
CLIO I 1.9 D (B/C/S576, B/C/S57L)	(B/C57_, 5/357_)	01/91→09/98		RUN62D	MAG62D	ETS62ND	ETS60D3N	438320ES
CLIO I Box 1.1	(S57_)	01/91→09/98		RUN50D	MAG50D-MAG45D	ETS50ND-ETS45ND	ETS50D3N-ETS50D4N	436210ES
CLIO I Box 1.2	(S57_)	01/91→09/98		RUN50D	MAG50D-MAG45D	ETS50ND-ETS45ND	ETS50D3N-ETS50D4N	436210ES
CLIO I Box 1.2	(S57_)	01/91→09/98		RUN50D	MAG50D-MAG45D	ETS50ND-ETS45ND	ETS50D3N-ETS50D4N	436210ES
CLIO I Box 1.2	(S57_)	06/94→02/98		RUN50D	MAG50D-MAG45D	ETS50ND-ETS45ND	ETS50D3N-ETS50D4N	436210ES
CLIO I Box 1.9 D	(S57_)	01/91→09/98		RUN62D	MAG62D	ETS62ND	ETS60D3N	438320ES
CLIO II 1.0	(BB0/1/2_, CB0/1/2_)	02/00→05/01			MAG44DB	ETS44NDB		ES45NDB
CLIO II 1.2 (B/CB0F, B/CB0A, B/CB10, B/CB1K, B/CB2D, B/CB2H)	(BB0/1/2_, CB0/1/2_)	09/98→		RUN50D	MAG50D	ETS50ND	ETS50D3N-ETS50D4N	
CLIO II 1.2	(BB0/1/2_, CB0/1/2_)	03/99→05/01			MAG44DB	ETS44NDB		ES45NDB
CLIO II 1.2	(BB0/1/2_, CB0/1/2_)	06/01→10/03			MAG44DB	ETS44NDB		ES45NDB
CLIO II 1.2 16V (B/CB05)	(BB0/1/2_, CB0/1/2_)	06/01→		RUN50D	MAG50D	ETS50ND	ETS50D3N-ETS50D4N	
CLIO II 1.4 (B/CB0C)	(BB0/1/2_, CB0/1/2_)	09/98→05/05		RUN50D	MAG50D	ETS50ND	ETS50D3N-ETS50D4N	
CLIO II 1.4 16V (B/CB0L)	(BB0/1/2_, CB0/1/2_)	10/99→08/00		RUN50D	MAG50D	ETS50ND	ETS50D3N-ETS50D4N	
CLIO II 1.4 16V (B/CB0P)	(BB0/1/2_, CB0/1/2_)	08/00→		RUN50D	MAG50D	ETS50ND	ETS50D3N-ETS50D4N	
CLIO II 1.6 (B/CB0D)	(BB0/1/2_, CB0/1/2_)	09/98→05/05		RUN50D	MAG50D	ETS50ND	ETS50D3N-ETS50D4N	
CLIO II 1.6 16V (CB0T, CB0H)	(BB0/1/2_, CB0/1/2_)	09/98→		RUN50D	MAG50D	ETS50ND	ETS50D3N-ETS50D4N	
CLIO II 2.0 16V Sport (CB0M)	(BB0/1/2_, CB0/1/2_)	02/00→			MAG62DB	ETS60NDB-ETS50NDB		ES60NDB
CLIO II 2.0 16V Sport	(BB0/1/2_, CB0/1/2_)	01/04→			MAG62DB	ETS60NDB-ETS50NDB		ES60NDB
CLIO II 3.0 V6 Sport (CB1A)	(BB0/1/2_, CB0/1/2_)	11/00→12/02			MAG62DB	ETS60NDB-ETS50NDB		ES60NDB
CLIO II 3.0 V6 Sport (CB1H, CB2S)	(BB0/1/2_, CB0/1/2_)	12/02→			MAG62DB	ETS60NDB-ETS50NDB		ES60NDB
CLIO II 1.5 dCi	(BB0/1/2_, CB0/1/2_)	06/05→			MAG62DB	ETS60NDB-ETS50NDB		ES60NDB

	Design		START	RUN	MAGIS	ETS	ETS alternative	ES
RENAULT								
CLIO II 1.5 dCi (B/CB07)	(BB0/1/2_, CB0/1/2_)	06/01→			MAG62DB	ETS60NDB-ETS50NDB		ES60NDB
CLIO II 1.5 D	(BB0/1/2_, CB0/1/2_)	08/04→			MAG62DB	ETS60NDB-ETS50NDB		ES60NDB
CLIO II 1.5 dCi	(BB0/1/2_, CB0/1/2_)	06/01→10/03			MAG62DB	ETS60NDB-ETS50NDB		ES60NDB
CLIO II 1.5 dCi (B/CB08)	(BB0/1/2_, CB0/1/2_)	06/01→			MAG62DB	ETS60NDB-ETS50NDB		ES60NDB
CLIO II 1.5 dCi	(BB0/1/2_, CB0/1/2_)	01/04→			MAG62DB	ETS60NDB-ETS50NDB		ES60NDB
CLIO II 1.5 dCi (B/CB3N)	(BB0/1/2_, CB0/1/2_)	02/07→			MAG62DB	ETS60NDB-ETS50NDB		ES60NDB
CLIO II 1.9 D (B/CB0E)	(BB0/1/2_, CB0/1/2_)	09/98→05/05		RUN62D	MAG62D	ETS62ND	ETS60D3N	438320ES
CLIO II 1.9 D	(BB0/1/2_, CB0/1/2_)	02/00→05/01		RUN62D	MAG62D	ETS62ND	ETS60D3N	438320ES
CLIO II 1.9 dTi (B/CB0U)	(BB0/1/2_, CB0/1/2_)	12/99→05/05		RUN72D	MAG74D	ETS74ND	ETS70D1N-ETS74DI	476420ES
CLIO II Box 1.1 (SB0A)	(SB0/1/2_)	09/98→		RUN50D	MAG50D	ETS50ND	ETS50D3N-ETS50D4N	
CLIO II Box 1.2	(SB0/1/2_)	03/99→10/03			MAG44DB	ETS44NDB		ES45NDB
CLIO II Box 1.6	(SB0/1/2_)	11/03→			MAG44DB	ETS44NDB		ES45NDB
CLIO II Box 1.5 dCi	(SB0/1/2_)	06/01→			MAG62DB	ETS60NDB-ETS50NDB		ES60NDB
CLIO II Box 1.5 dCi	(SB0/1/2_)	04/04→			MAG62DB	ETS60NDB-ETS50NDB		ES60NDB
CLIO II Box 1.5 dCi	(SB0/1/2_)	06/01→10/04			MAG62DB	ETS60NDB-ETS50NDB		ES60NDB
CLIO II Box 1.5 dCi	(SB0/1/2_)	11/03→			MAG62DB	ETS60NDB-ETS50NDB		ES60NDB
CLIO II Box 1.9 D	(SB0/1/2_)	03/99→01/00		RUN62D	MAG62D	ETS62ND	ETS60D3N	438320ES
CLIO II Box 1.9 D (SB0E)	(SB0/1/2_)	09/98→		RUN62D	MAG62D	ETS62ND	ETS60D3N	438320ES
CLIO II Box 1.9 D	(SB0/1/2_)	02/00→05/01		RUN62D	MAG62D	ETS62ND	ETS60D3N	438320ES
CLIO II Box 1.9 DTi	(SB0/1/2_)	02/00→05/01		RUN62D	MAG62D	ETS62ND	ETS60D3N	438320ES
CLIO III 1.2 16V (C/BR1J, C/BR1Q)	(BR0/1, CR0/1)	06/05→			MAG44DB	ETS44NDB		ES45NDB
CLIO III 1.2 16V	(BR0/1, CR0/1)	06/05→			MAG44DB	ETS44NDB		ES45NDB
CLIO III 1.2 16V Hi-Flex	(BR0/1, CR0/1)	07/08→			MAG44DB	ETS44NDB		ES45NDB
CLIO III 1.2 16V	(BR0/1, CR0/1)	06/05→			MAG44DB	ETS44NDB		ES45NDB
CLIO III 1.2	(BR0/1, CR0/1)	10/05→			MAG44DB	ETS44NDB		ES45NDB
CLIO III 1.2 16V	(BR0/1, CR0/1)	05/07→			MAG44DB	ETS44NDB		ES45NDB
CLIO III 1.4 16V	(BR0/1, CR0/1)	06/05→			MAG44DB	ETS44NDB		ES45NDB
CLIO III 1.6 16V	(BR0/1, CR0/1)	06/05→			MAG44DB	ETS44NDB		ES45NDB
CLIO III 1.6 16V	(BR0/1, CR0/1)	06/05→			MAG44DB	ETS44NDB		ES45NDB
CLIO III 1.6 16V GT	(BR0/1, CR0/1)	06/09→			MAG44DB	ETS44NDB		ES45NDB
CLIO III 2.0 16V	(BR0/1, CR0/1)	09/06→			MAG62DB	ETS60NDB-ETS50NDB		ES60NDB
CLIO III 2.0 16V Sport	(BR0/1, CR0/1)	02/06→			MAG62DB	ETS60NDB-ETS50NDB		ES60NDB
CLIO III 2.0 16V Sport	(BR0/1, CR0/1)	09/08→			MAG62DB	ETS60NDB-ETS50NDB		ES60NDB
CLIO III 1.5 dCi	(BR0/1, CR0/1)	06/05→			MAG72DB	ETS71NDB		
CLIO III 1.5 dCi	(BR0/1, CR0/1)	05/05→10/06			MAG72DB	ETS71NDB		
CLIO III 1.5 dCi (C/BR1G)	(BR0/1, CR0/1)	06/05→			MAG72DB	ETS71NDB		
CLIO III 1.5 D	(BR0/1, CR0/1)	11/07→			MAG72DB	ETS71NDB		
CLIO III 1.5 dCi	(BR0/1, CR0/1)	06/05→			MAG72DB	ETS71NDB		
CLIO III 1.5 dCi	(BR0/1, CR0/1)	06/05→			MAG72DB	ETS71NDB		
CLIO III 1.5 dCi	(BR0/1, CR0/1)	06/05→			MAG72DB	ETS71NDB		
CLIO Grandtour 1.2 16V	(KR0/1_)	02/08→			MAG62DB	ETS60NDB-ETS50NDB		ES60NDB
CLIO Grandtour 1.2 16V Hi-Flex	(KR0/1_)	07/08→			MAG62DB	ETS60NDB-ETS50NDB		ES60NDB
CLIO Grandtour 1.2 16V	(KR0/1_)	02/08→			MAG62DB	ETS60NDB-ETS50NDB		ES60NDB
CLIO Grandtour 1.2 16V (KR0P)	(KR0/1_)	02/08→			MAG62DB	ETS60NDB-ETS50NDB		ES60NDB
CLIO Grandtour 1.6 16V (KR0B)	(KR0/1_)	02/08→			MAG62DB	ETS60NDB-ETS50NDB		ES60NDB
CLIO Grandtour 1.6 16V	(KR0/1_)	11/08→			MAG44DB	ETS44NDB		ES45NDB
CLIO Grandtour 1.5 dCi (KR0G)	(KR0/1_)	02/08→			MAG72DB	ETS71NDB		

	Design		START	RUN	MAGIS	ETS	ETS alternative	ES
RENAULT								
CLIO Grandtour 1.5 dCi (KR0F)	(KR0/1_)	02/08→			MAG72DB	ETS71NDB		
CLIO Grandtour 1.5 dCi (KR1C, KR1N)	(KR0/1_)	02/08→			MAG72DB	ETS71NDB		
CLIO Grandtour 1.5 dCi (KR0H)	(KR0/1_)	02/08→			MAG72DB	ETS71NDB		
ESPACE II 2.0 (J636)	(J/S63_)	01/91→10/96		RUN62D	MAG62D	ETS62ND	ETS60D3N	438320ES
ESPACE II 2.2 (J/S637, J63G)	(J/S63_)	01/91→10/96		RUN72D	MAG74D	ETS74ND	ETS70D1N-ETS74DI	476420ES
ESPACE II 2.2 4x4 (J/S637, J63G)	(J/S63_)	03/91→12/96		RUN62D	MAG62D	ETS62ND	ETS60D3N	438320ES
ESPACE II 2.8 V6 (J638, J63J)	(J/S63_)	01/91→10/96		RUN62D	MAG62D	ETS62ND	ETS60D3N	438320ES
ESPACE II 2.1 TD (J633, J634, J/S635, J/S63D)	(J/S63_)	01/91→10/96		RUN72D	MAG74D	ETS74ND	ETS70D1N-ETS74DI	476420ES
ESPACE II 2.1 TD (J63E)	(J/S63_)	11/94→10/96		RUN72D	MAG74D	ETS74ND	ETS70D1N-ETS74DI	476420ES
ESPACE III 2.0 (JE0A)	(JE0_)	11/96→10/00		RUN72D	MAG74D	ETS74ND	ETS70D1N-ETS74DI	476420ES
ESPACE III 2.0	(JE0_)	09/01→10/02		RUN72D	MAG74D	ETS74ND	ETS70D1N-ETS74DI	476420ES
ESPACE III 2.0 16V (JE0N, JE0L, JE02)	(JE0_)	10/98→10/02		RUN72D	MAG74D	ETS74ND	ETS70D1N-ETS74DI	476420ES
ESPACE III 3.0 (JE0D)	(JE0_)	11/96→10/98		RUN72D	MAG74D	ETS74ND	ETS70D1N-ETS74DI	476420ES
ESPACE III 3.0 V6 24V (JE0G, JE0R)	(JE0_)	10/98→10/02		RUN72D	MAG74D	ETS74ND	ETS70D1N-ETS74DI	476420ES
ESPACE III 1.9 dTi (JE0M)	(JE0_)	02/99→10/02		RUN72D	MAG74D	ETS74ND	ETS70D1N-ETS74DI	476420ES
ESPACE III 2.2 12V TD (JE0E, JE0H, JE0P)	(JE0_)	11/96→10/00		RUN72D	MAG74D	ETS74ND	ETS70D1N-ETS74DI	476420ES
ESPACE III 2.2 dCi (JEOS)	(JE0_)	07/00→10/02		RUN72D	MAG74D	ETS74ND	ETS70D1N-ETS74DI	476420ES
ESPACE III 2.2 dCi (JE0K)	(JE0_)	10/00→10/02		RUN72D	MAG74D	ETS74ND	ETS70D1N-ETS74DI	476420ES
ESPACE III 2.2 D	(JE0_)	11/97→01/00		RUN72D	MAG74D	ETS74ND	ETS70D1N-ETS74DI	476420ES
ESPACE IV 2.0	(JK0/1_)	11/02→02/05			MAG72DB	ETS71NDB		
ESPACE IV 2.0 (JK0KA6)	(JK0/1_)	11/02→		RUN72D	MAG74D	ETS74ND	ETS70D1N-ETS74DI	476420ES
ESPACE IV 2.0 Turbo (JK0BA6, JK0BC6, JK0BAB, JK0BCB)	(JK0/1_)	11/02→		RUN72D	MAG74D	ETS74ND	ETS70D1N-ETS74DI	476420ES
ESPACE IV 2.0	(JK0/1_)	04/05→		RUN72D	MAG74D	ETS74ND	ETS70D1N-ETS74DI	476420ES
ESPACE IV 3.5 V6 (JK0FAB, JK0FCB)	(JK0/1_)	11/02→		RUN72D	MAG74D	ETS74ND	ETS70D1N-ETS74DI	476420ES
ESPACE IV 1.9 dCi	(JK0/1_)	04/03→02/05			MAG82D	ETS80ND		
ESPACE IV 1.9 dCi (JK0U, JK0G)	(JK0/1_)	11/02→			MAG82D	ETS80ND		
ESPACE IV 2.0 dCi	(JK0/1_)	01/06→			MAG82D	ETS80ND		
ESPACE IV 2.0 dCi	(JK0/1_)	01/06→			MAG82D	ETS80ND		
ESPACE IV 2.0 dCi	(JK0/1_)	01/06→			MAG82D	ETS80ND		
ESPACE IV 2.2 dCi	(JK0/1_)	02/06→			MAG82D	ETS80ND		
ESPACE IV 2.2 dCi (JK0HA6, JK0HC6, JK0HAB, JK0HCB)	(JK0/1_)	11/02→			MAG82D	ETS80ND		
ESPACE IV 3.0 dCi (JK0JAB, JK0JCB)	(JK0/1_)	11/02→			MAG82D	ETS80ND		
ESPACE IV 3.0 dCi	(JK0/1_)	01/06→			MAG82D	ETS80ND		
FLUENCE 1.6 16V		02/10→		RUN50D	MAG50D	ETS50ND	ETS50D3N-ETS50D4N	
FLUENCE 2.0 16V		02/10→		RUN62D	MAG62D	ETS62ND	ETS60D3N	438320ES
FLUENCE 1.5 dCi		02/10→		RUN62D	MAG62D	ETS62ND	ETS60D3N	438320ES
FLUENCE 1.5 dCi		02/10→		RUN62D	MAG62D	ETS62ND	ETS60D3N	438320ES
KANGOO 1.2 (KC0A, KC0K, KC0F, KC01)	(KC0/1_)	08/97→		RUN50D	MAG50D-MAG45D	ETS50ND-ETS45ND	ETS50D3N-ETS50D4N	436210ES
KANGOO 1.2 16V (KC03, KC05, KC06, KC0T, KC0W)	(KC0/1_)	06/01→		RUN50D	MAG50D-MAG45D	ETS50ND-ETS45ND	ETS50D3N-ETS50D4N	436210ES
KANGOO 1.4 (KC0C, KC0H, KC0B, KC0M)	(KC0/1_)	08/97→		RUN50D	MAG50D-MAG45D	ETS50ND-ETS45ND	ETS50D3N-ETS50D4N	436210ES

	Design		START	RUN	MAGIS	ETS	ETS alternative	ES
RENAULT								
KANGOO 1.6 16V bivalent	(KC0/1_)	06/05→		RUN50D	MAG50D	ETS50ND	ETS50D3N-ETS50D4N	
KANGOO 1.6 16V	(KC0/1_)	06/01→		RUN50D	MAG50D	ETS50ND	ETS50D3N-ETS50D4N	
KANGOO 1.6 16V 4x4 (KC0P, KC0S, KC0L)	(KC0/1_)	10/01→		RUN50D	MAG50D-MAG45D	ETS50ND-ETS45ND	ETS50D3N-ETS50D4N	436210ES
KANGOO 1.5 dCi	(KC0/1_)	07/03→		RUN62D	MAG62D	ETS62ND	ETS60D3N	438320ES
KANGOO 1.5 dCi (KC07)	(KC0/1_)	12/01→		RUN62D	MAG62D	ETS62ND	ETS60D3N	438320ES
KANGOO 1.5 dCi	(KC0/1_)	06/05→		RUN62D	MAG62D	ETS62ND	ETS60D3N	438320ES
KANGOO 1.5 dCi (KC08, KC09)	(KC0/1_)	07/02→		RUN62D	MAG62D	ETS62ND	ETS60D3N	438320ES
KANGOO 1.5 dCi	(KC0/1_)	06/05→		RUN62D	MAG62D	ETS62ND	ETS60D3N	438320ES
KANGOO D 55 1.9 (KC0D)	(KC0/1_)	08/97→		RUN72D	MAG74D	ETS74ND	ETS70D1N-ETS74DI	476420ES
KANGOO D 65 1.9 (KC0E, KC02, KC0J, KC0N)	(KC0/1_)	08/97→		RUN72D	MAG74D	ETS74ND	ETS70D1N-ETS74DI	476420ES
KANGOO 1.9 dTi (KC0U)	(KC0/1_)	02/00→		RUN72D	MAG74D	ETS74ND	ETS70D1N-ETS74DI	476420ES
KANGOO 1.9 dCi 4x4 (KC0V)	(KC0/1_)	10/01→		RUN72D	MAG74D	ETS74ND	ETS70D1N-ETS74DI	476420ES
KANGOO 1.9 dCi 4x4	(KC0/1_)	10/03→		RUN72D	MAG74D	ETS74ND	ETS70D1N-ETS74DI	476420ES
KANGOO Express 1.0	(FC0/1_)	07/03→		RUN50D	MAG50D-MAG45D	ETS50ND-ETS45ND	ETS50D3N-ETS50D4N	436210ES
KANGOO Express 1.2 (FC01, FC0A, FC0F)	(FC0/1_)	08/97→		RUN50D	MAG50D-MAG45D	ETS50ND-ETS45ND	ETS50D3N-ETS50D4N	436210ES
KANGOO Express 1.2	(FC0/1_)	07/98→07/01		RUN50D	MAG50D-MAG45D	ETS50ND-ETS45ND	ETS50D3N-ETS50D4N	436210ES
KANGOO Express 1.2 16V (FC05)	(FC0/1_)	10/01→		RUN50D	MAG50D-MAG45D	ETS50ND-ETS45ND	ETS50D3N-ETS50D4N	436210ES
KANGOO Express 1.4 (FC0C, FC0B, FC0H, FC0M)	(FC0/1_)	08/97→		RUN50D	MAG50D-MAG45D	ETS50ND-ETS45ND	ETS50D3N-ETS50D4N	436210ES
KANGOO Express 1.6 16V	(FC0/1_)	10/01→		RUN50D	MAG50D-MAG45D	ETS50ND-ETS45ND	ETS50D3N-ETS50D4N	436210ES
KANGOO Express 1.6 16V 4x4 (FC0L, FC0P, FC0S)	(FC0/1_)	10/01→		RUN50D	MAG50D-MAG45D	ETS50ND-ETS45ND	ETS50D3N-ETS50D4N	436210ES
KANGOO Express 1.5 dCi	(FC0/1_)	12/02→		RUN62D	MAG62D	ETS62ND	ETS60D3N	438320ES
KANGOO Express 1.5 dCi (FC07)	(FC0/1_)	12/01→		RUN62D	MAG62D	ETS62ND	ETS60D3N	438320ES
KANGOO Express 1.5 dCi	(FC0/1_)	06/05→		RUN62D	MAG62D	ETS62ND	ETS60D3N	438320ES
KANGOO Express 1.5 dCi (FC08, FC09)	(FC0/1_)	04/03→		RUN62D	MAG62D	ETS62ND	ETS60D3N	438320ES
KANGOO Express 1.5 dCi	(FC0/1_)	06/05→		RUN62D	MAG62D	ETS62ND	ETS60D3N	438320ES
KANGOO Express D 55 1.9 (FC0D)	(FC0/1_)	08/97→		RUN62D	MAG62D	ETS62ND	ETS60D3N	438320ES
KANGOO Express D 65 1.9 (FC0E, FC02, FC0J, FC0N)	(FC0/1_)	08/97→		RUN62D	MAG62D	ETS62ND	ETS60D3N	438320ES
KANGOO Express 1.9 D	(FC0/1_)	09/99→06/03		RUN72D	MAG74D	ETS74ND	ETS70D1N-ETS74DI	476420ES
KANGOO Express 1.9 dTi (FC0U)	(FC0/1_)	02/00→		RUN72D	MAG74D	ETS74ND	ETS70D1N-ETS74DI	476420ES
KANGOO Express 1.9 dCi 4x4 (FC0V)	(FC0/1_)	10/01→		RUN72D	MAG74D	ETS74ND	ETS70D1N-ETS74DI	476420ES
KANGOO Express 1.9 dCi	(FC0/1_)	07/03→		RUN72D	MAG74D	ETS74ND	ETS70D1N-ETS74DI	476420ES
KANGOO Express 1.9 dCi 4x4	(FC0/1_)	07/03→		RUN72D	MAG74D	ETS74ND	ETS70D1N-ETS74DI	476420ES
KANGOO 1.6	(KW0/1_)	02/08→		RUN50D	MAG50D	ETS50ND	ETS50D3N-ETS50D4N	
KANGOO 1.6 16V	(KW0/1_)	02/08→		RUN50D	MAG50D	ETS50ND	ETS50D3N-ETS50D4N	
KANGOO 1.6 16V Hi-Flex	(KW0/1_)	02/08→		RUN50D	MAG50D	ETS50ND	ETS50D3N-ETS50D4N	
KANGOO 1.5 dCi	(KW0/1_)	02/08→		RUN62D	MAG62D	ETS62ND	ETS60D3N	438320ES
KANGOO 1.5 dCi	(KW0/1_)	02/08→		RUN62D	MAG62D	ETS62ND	ETS60D3N	438320ES
KANGOO 1.5 dCi	(KW0/1_)	02/08→		RUN62D	MAG62D	ETS62ND	ETS60D3N	438320ES
KANGOO Express 1.6	(FW0/1_)	02/08→		RUN50D	MAG50D	ETS50ND	ETS50D3N-ETS50D4N	
KANGOO Express 1.6 16V LPG	(FW0/1_)	02/08→		RUN50D	MAG50D	ETS50ND	ETS50D3N-ETS50D4N	
KANGOO Express 1.6 16V	(FW0/1_)	02/08→		RUN50D	MAG50D	ETS50ND	ETS50D3N-ETS50D4N	

	Design		START	RUN	MAGIS	ETS	ETS alternative	ES
RENAULT								
KANGOO Express 1.5 dCi	(FW0/1_)	02/08→		RUN62D	MAG62D	ETS62ND	ETS60D3N	438320ES
KANGOO Express 1.5 dCi	(FW0/1_)	02/08→		RUN62D	MAG62D	ETS62ND	ETS60D3N	438320ES
KANGOO Express 1.5 dCi	(FW0/1_)	06/09→		RUN62D	MAG62D	ETS62ND	ETS60D3N	438320ES
KANGOO Express 1.5 dCi	(FW0/1_)	02/08→		RUN62D	MAG62D	ETS62ND	ETS60D3N	438320ES
KANGOO BE BOP 1.6	(KW0/1_)	02/09→		RUN50D	MAG50D	ETS50ND	ETS50D3N-ETS50D4N	
KANGOO BE BOP 1.5 dCi	(KW0/1_)	02/09→		RUN62D	MAG62D	ETS62ND	ETS60D3N	438320ES
LAGUNA 1.6 16V (B568, B561)	(B56_, 556_)	11/97→03/01		RUN50D	MAG50D	ETS50ND	ETS50D3N-ETS50D4N	
LAGUNA 1.8 (B56A/B)	(B56_, 556_)	11/93→03/01		RUN72D	MAG74D	ETS74ND	ETS70D1N-ETS74DI	476420ES
LAGUNA 1.8 (B56S/T/0)	(B56_, 556_)	08/95→03/01		RUN72D	MAG74D	ETS74ND	ETS70D1N-ETS74DI	476420ES
LAGUNA 1.8	(B56_, 556_)	06/95→02/01		RUN62D	MAG62D	ETS62ND	ETS60D3N	438320ES
LAGUNA 1.8 (B56Z)	(B56_, 556_)	08/95→03/01		RUN72D	MAG74D	ETS74ND	ETS70D1N-ETS74DI	476420ES
LAGUNA 1.8	(B56_, 556_)	06/95→06/98		RUN62D	MAG62D	ETS62ND	ETS60D3N	438320ES
LAGUNA 1.8	(B56_, 556_)	06/95→06/98		RUN62D	MAG62D	ETS62ND	ETS60D3N	438320ES
LAGUNA 1.8 16V (B563, B564)	(B56_, 556_)	04/98→03/01		RUN50D				
LAGUNA 2.0 16V (B56D/M)	(B56_, 556_)	06/95→03/01		RUN62D	MAG62D	ETS62ND	ETS60D3N	438320ES
LAGUNA 2.0	(B56_, 556_)	06/95→02/01		RUN62D	MAG62D	ETS62ND	ETS60D3N	438320ES
LAGUNA 2.0	(B56_, 556_)	11/93→03/01		RUN62D	MAG62D	ETS62ND	ETS60D3N	438320ES
LAGUNA 2.0	(B56_, 556_)	03/99→03/01		RUN72D	MAG74D	ETS74ND	ETS70D1N-ETS74DI	476420ES
LAGUNA 2.0 (B56C/H/N)	(B56_, 556_)	11/93→03/01		RUN72D	MAG74D	ETS74ND	ETS70D1N-ETS74DI	476420ES
LAGUNA 2.0	(B56_, 556_)	06/95→02/01		RUN62D	MAG62D	ETS62ND	ETS60D3N	438320ES
LAGUNA 2.0	(B56_, 556_)	09/99→02/01		RUN62D	MAG62D	ETS62ND	ETS60D3N	438320ES
LAGUNA 2.0 16V (556A/B)	(B56_, 556_)	09/99→03/01		RUN62D	MAG62D	ETS62ND	ETS60D3N	438320ES
LAGUNA 3.0 24V (B56V)	(B56_, 556_)	03/97→03/01		RUN72D	MAG74D	ETS74ND	ETS70D1N-ETS74DI	476420ES
LAGUNA 3.0 (B56E/R, B565)	(B56_, 556_)	11/93→03/01		RUN72D	MAG74D	ETS74ND	ETS70D1N-ETS74DI	476420ES
LAGUNA 1.9 dTi (B56J)	(B56_, 556_)	10/97→03/01		RUN72D	MAG74D	ETS74ND	ETS70D1N-ETS74DI	476420ES
LAGUNA 1.9 dCi (B56W)	(B56_, 556_)	09/99→03/01		RUN72D	MAG74D	ETS74ND	ETS70D1N-ETS74DI	476420ES
LAGUNA 2.2 D (B56F/2)	(B56_, 556_)	11/93→03/01		RUN72D	MAG74D	ETS74ND	ETS70D1N-ETS74DI	476420ES
LAGUNA 2.2 dT (B569)	(B56_, 556_)	03/96→03/01		RUN72D	MAG74D	ETS74ND	ETS70D1N-ETS74DI	476420ES
LAGUNA Grandtour 1.6 16V (K568)	(K56_)	11/97→03/01		RUN50D	MAG50D	ETS50ND	ETS50D3N-ETS50D4N	
LAGUNA Grandtour 1.8 (K56S/T/0)	(K56_)	09/95→03/01		RUN72D	MAG74D	ETS74ND	ETS70D1N-ETS74DI	476420ES
LAGUNA Grandtour 1.8 (K56Z)	(K56_)	09/95→03/01		RUN72D	MAG74D	ETS74ND	ETS70D1N-ETS74DI	476420ES
LAGUNA Grandtour 1.8 16V (K563, K564)	(K56_)	04/98→03/01		RUN62D	MAG62D	ETS62ND	ETS60D3N	438320ES
LAGUNA Grandtour 2.0 (K56C/H)	(K56_)	09/95→03/01		RUN72D	MAG74D	ETS74ND	ETS70D1N-ETS74DI	476420ES
LAGUNA Grandtour 2.0	(K56_)	10/98→01/01		RUN62D	MAG62D	ETS62ND	ETS60D3N	438320ES
LAGUNA Grandtour 2.0 16V (K56D/M)	(K56_)	09/95→03/01		RUN62D	MAG62D	ETS62ND	ETS60D3N	438320ES
LAGUNA Grandtour 2.0 16V (A56A/B)	(K56_)	09/99→03/01		RUN62D	MAG62D	ETS62ND	ETS60D3N	438320ES
LAGUNA Grandtour 3.0 24V (K56V)	(K56_)	03/97→03/01		RUN72D	MAG74D	ETS74ND	ETS70D1N-ETS74DI	476420ES
LAGUNA Grandtour 3.0 (K56R, K565)	(K56_)	02/96→03/01		RUN72D	MAG74D	ETS74ND	ETS70D1N-ETS74DI	476420ES
LAGUNA Grandtour 1.9 dTi (K56J)	(K56_)	10/97→03/01		RUN72D	MAG74D	ETS74ND	ETS70D1N-ETS74DI	476420ES
LAGUNA Grandtour 1.9 dCi (K56W)	(K56_)	09/99→03/01		RUN72D	MAG74D	ETS74ND	ETS70D1N-ETS74DI	476420ES
LAGUNA Grandtour 2.2 D (K56F/2, S56F)	(K56_)	09/95→03/01		RUN72D	MAG74D	ETS74ND	ETS70D1N-ETS74DI	476420ES
LAGUNA Grandtour 2.2 dT (K569)	(K56_)	03/96→03/01		RUN72D	MAG74D	ETS74ND	ETS70D1N-ETS74DI	476420ES
LAGUNA II 1.6 16V (BG0A, BG0L)	(BG0/1_)	03/01→			MAG62DB	ETS60NDB-ETS50NDB		ES60NDB
LAGUNA II 1.6 16V	(BG0/1_)	02/05→			MAG62DB	ETS60NDB-ETS50NDB		ES60NDB
LAGUNA II 1.8 16V (BG06, BG0J, BG0M)	(BG0/1_)	03/01→			MAG62DB	ETS60NDB-ETS50NDB		ES60NDB
LAGUNA II 1.8 16V (BG0B, BG0M)	(BG0/1_)	03/01→			MAG62DB	ETS60NDB-ETS50NDB		ES60NDB

	Design		START	RUN	MAGIS	ETS	ETS alternative	ES
RENAULT								
LAGUNA II 1.8 16V (BG0C, BG0V)	(BG0/1_)	03/01→			MAG62DB	ETS60NDB-ETS50NDB		ES60NDB
LAGUNA II 2.0 16V (BG00, BG0K, BG0P, BG0W)	(BG0/1_)	08/02→		RUN72D	MAG74D	ETS74ND	ETS70D1N-ETS74DI	476420ES
LAGUNA II 2.0 16V IDE (BG0N)	(BG0/1_)	04/01→		RUN72D	MAG74D	ETS74ND	ETS70D1N-ETS74DI	476420ES
LAGUNA II 2.0 16V Turbo (BG0S, BG0Z, BG1L, BG1M)	(BG0/1_)	01/03→		RUN72D	MAG74D	ETS74ND	ETS70D1N-ETS74DI	476420ES
LAGUNA II 2.0 16V	(BG0/1_)	01/05→		RUN72D	MAG74D	ETS74ND	ETS70D1N-ETS74DI	476420ES
LAGUNA II 2.0 16V	(BG0/1_)	01/05→		RUN72D	MAG74D	ETS74ND	ETS70D1N-ETS74DI	476420ES
LAGUNA II 3.0 V6 24V (BG0D)	(BG0/1_)	03/01→		RUN72D	MAG74D	ETS74ND	ETS70D1N-ETS74DI	476420ES
LAGUNA II 1.9 dCi	(BG0/1_)	03/04→			MAG72DB	ETS71NDB		
LAGUNA II 1.9 dCi (BG0R)	(BG0/1_)	10/01→		RUN72D	MAG74D	ETS74ND	ETS70D1N-ETS74DI	476420ES
LAGUNA II 1.9 dCI (BG0E)	(BG0/1_)	06/01→		RUN72D	MAG74D	ETS74ND	ETS70D1N-ETS74DI	476420ES
LAGUNA II 1.9 dCi	(BG0/1_)	03/01→			MAG72DB	ETS71NDB		
LAGUNA II 1.9 dCi	(BG0/1_)	01/05→			MAG72DB	ETS71NDB		
LAGUNA II 1.9 dCi (BG0G)	(BG0/1_)	03/01→		RUN72D	MAG74D	ETS74ND	ETS70D1N-ETS74DI	476420ES
LAGUNA II 1.9 dCi	(BG0/1_)	05/05→			MAG72DB	ETS71NDB		
LAGUNA II 2.0 dCi	(BG0/1_)	08/05→			MAG72DB	ETS71NDB		
LAGUNA II 2.0 dCi	(BG0/1_)	01/06→			MAG72DB	ETS71NDB		
LAGUNA II 2.2 dCi	(BG0/1_)	04/04→10/05			MAG72DB	ETS71NDB		
LAGUNA II 2.2 dCi	(BG0/1_)	05/05→			MAG72DB	ETS71NDB		
LAGUNA II 2.2 dCi (BG0F)	(BG0/1_)	10/01→		RUN72D	MAG74D	ETS74ND	ETS70D1N-ETS74DI	476420ES
LAGUNA II Grandtour 1.6 FlexFuel	(KG0/1_)	06/01→10/03			MAG44DB	ETS44NDB		ES45NDB
LAGUNA II Grandtour 1.6 16V (KG0A, KG0L)	(KG0/1_)	03/01→			MAG62DB	ETS60NDB-ETS50NDB		ES60NDB
LAGUNA II Grandtour 1.6 16V	(KG0/1_)	02/05→			MAG62DB	ETS60NDB-ETS50NDB		ES60NDB
LAGUNA II Grandtour 1.8 16V (KG0J)	(KG0/1_)	03/01→			MAG62DB	ETS60NDB-ETS50NDB		ES60NDB
LAGUNA II Grandtour 1.8 16V (KG0B, KG0M)	(KG0/1_)	03/01→			MAG62DB	ETS60NDB-ETS50NDB		ES60NDB
LAGUNA II Grandtour 1.8 16V	(KG0/1_)	03/01→			MAG62DB	ETS60NDB-ETS50NDB		ES60NDB
LAGUNA II Grandtour 2.0	(KG0/1_)	09/02→05/05			MAG62DB	ETS60NDB-ETS50NDB		ES60NDB
LAGUNA II Grandtour 2.0 16V (KG00, KG0K, KG0W)	(KG0/1_)	08/02→		RUN72D	MAG74D	ETS74ND	ETS70D1N-ETS74DI	476420ES
LAGUNA II Grandtour 2.0 16V IDE (KG0N, KG0P)	(KG0/1_)	04/01→			MAG62DB	ETS60NDB-ETS50NDB		ES60NDB
LAGUNA II Grandtour 2.0 16V Turbo (KG0S, KG0Z, KG1L, KG1M)	(KG0/1_)	01/03→		RUN72D	MAG74D	ETS74ND	ETS70D1N-ETS74DI	476420ES
LAGUNA II Grandtour 2.0 16V	(KG0/1_)	01/05→		RUN72D	MAG74D	ETS74ND	ETS70D1N-ETS74DI	476420ES
LAGUNA II Grandtour 2.0 16V	(KG0/1_)	01/05→		RUN72D	MAG74D	ETS74ND	ETS70D1N-ETS74DI	476420ES
LAGUNA II Grandtour 3.0 V6 24V (KG0D)	(KG0/1_)	03/01→		RUN72D	MAG74D	ETS74ND	ETS70D1N-ETS74DI	476420ES
LAGUNA II Grandtour 1.9 dCi	(KG0/1_)	03/04→			MAG72DB	ETS71NDB		
LAGUNA II Grandtour 1.9 dCi (KG0R)	(KG0/1_)	10/01→		RUN72D	MAG74D	ETS74ND	ETS70D1N-ETS74DI	476420ES
LAGUNA II Grandtour 1.9 dCI (KG0E)	(KG0/1_)	06/01→		RUN72D	MAG74D	ETS74ND	ETS70D1N-ETS74DI	476420ES
LAGUNA II Grandtour 1.9 dCi	(KG0/1_)	03/01→			MAG72DB	ETS71NDB		
LAGUNA II Grandtour 1.9 dCi	(KG0/1_)	01/05→			MAG72DB	ETS71NDB		
LAGUNA II Grandtour 1.9 dCi (KG0G)	(KG0/1_)	03/01→		RUN72D	MAG74D	ETS74ND	ETS70D1N-ETS74DI	476420ES
LAGUNA II Grandtour 1.9 dCi	(KG0/1_)	05/05→			MAG72DB	ETS71NDB		

	Design		START	RUN	MAGIS	ETS	ETS alternative	ES
RENAULT								
LAGUNA II Grandtour 2.0 dCi	(KG0/1_)	08/05→			MAG72DB	ETS71NDB		
LAGUNA II Grandtour 2.0 dCi	(KG0/1_)	01/06→			MAG72DB	ETS71NDB		
LAGUNA II Grandtour 2.2 dCi	(KG0/1_)	04/04→10/05			MAG72DB	ETS71NDB		
LAGUNA II Grandtour 2.2 dCi	(KG0/1_)	05/05→			MAG72DB	ETS71NDB		
LAGUNA II Grandtour 2.2 dCi (KG0F)	(KG0/1_)	10/01→		RUN72D	MAG74D	ETS74ND	ETS70D1N-ETS74DI	476420ES
LAGUNA III 1.6 16V	(BT0/1)	10/07→		RUN62D	MAG62D	ETS62ND	ETS60D3N	438320ES
LAGUNA III 2.0 16V	(BT0/1)	10/07→		RUN62D	MAG62D	ETS62ND	ETS60D3N	438320ES
LAGUNA III 2.0 16V Turbo	(BT0/1)	10/07→		RUN62D	MAG62D	ETS62ND	ETS60D3N	438320ES
LAGUNA III 2.0 GT	(BT0/1)	03/08→		RUN62D	MAG62D	ETS62ND	ETS60D3N	438320ES
LAGUNA III 1.5 dCi	(BT0/1)	10/07→		RUN62D	MAG62D	ETS62ND	ETS60D3N	438320ES
LAGUNA III 2.0 dCi	(BT0/1)	10/07→		RUN72D	MAG74D	ETS74ND	ETS70D1N-ETS74DI	476420ES
LAGUNA III 2.0 dCi	(BT0/1)	10/07→		RUN72D	MAG74D	ETS74ND	ETS70D1N-ETS74DI	476420ES
LAGUNA III 2.0 dCi	(BT0/1)	01/08→		RUN72D	MAG74D	ETS74ND	ETS70D1N-ETS74DI	476420ES
LAGUNA III 2.0 dCi GT	(BT0/1)	03/08→		RUN72D	MAG74D	ETS74ND	ETS70D1N-ETS74DI	476420ES
LAGUNA III Grandtour 1.6 16V	(KT0/1)	10/07→		RUN62D	MAG62D	ETS62ND	ETS60D3N	438320ES
LAGUNA III Grandtour 2.0 16V	(KT0/1)	10/07→		RUN62D	MAG62D	ETS62ND	ETS60D3N	438320ES
LAGUNA III Grandtour 2.0 16V Turbo	(KT0/1)	10/07→		RUN62D	MAG62D	ETS62ND	ETS60D3N	438320ES
LAGUNA III Grandtour 2.0 GT	(KT0/1)	03/08→		RUN62D	MAG62D	ETS62ND	ETS60D3N	438320ES
LAGUNA III Grandtour 1.5 dCi	(KT0/1)	10/07→		RUN62D	MAG62D	ETS62ND	ETS60D3N	438320ES
LAGUNA III Grandtour 2.0 dCi	(KT0/1)	10/07→		RUN72D	MAG74D	ETS74ND	ETS70D1N-ETS74DI	476420ES
LAGUNA III Grandtour 2.0 dCi	(KT0/1)	10/07→		RUN72D	MAG74D	ETS74ND	ETS70D1N-ETS74DI	476420ES
LAGUNA III Grandtour 2.0 dCi	(KT0/1)	01/08→		RUN72D	MAG74D	ETS74ND	ETS70D1N-ETS74DI	476420ES
LAGUNA III Grandtour 2.0 dCi GT	(KT0/1)	03/08→		RUN72D	MAG74D	ETS74ND	ETS70D1N-ETS74DI	476420ES
LAGUNA Coupe 2.0 16V Turbo	(DT0/1)	09/08→		RUN72D	MAG74D	ETS74ND	ETS70D1N-ETS74DI	476420ES
LAGUNA Coupe 2.0 GT	(DT0/1)	03/08→		RUN72D	MAG74D	ETS74ND	ETS70D1N-ETS74DI	476420ES
LAGUNA Coupe 3.5 V6	(DT0/1)	09/08→		RUN72D	MAG74D	ETS74ND	ETS70D1N-ETS74DI	476420ES
LAGUNA Coupe 2.0 dCi	(DT0/1)	10/07→		RUN72D	MAG74D	ETS74ND	ETS70D1N-ETS74DI	476420ES
LAGUNA Coupe 2.0 dCi (DT1M)	(DT0/1)	09/08→		RUN72D	MAG74D	ETS74ND	ETS70D1N-ETS74DI	476420ES
LAGUNA Coupe 2.0 dCi GT	(DT0/1)	03/08→		RUN72D	MAG74D	ETS74ND	ETS70D1N-ETS74DI	476420ES
LAGUNA Coupe 3.0 dCi (DT03)	(DT0/1)	09/08→			MAG82D	ETS80ND		
LOGAN 1.4	(LS_)	09/04→		RUN50D	MAG50D	ETS50ND	ETS50D3N-ETS50D4N	
LOGAN 1.6	(LS_)	09/04→		RUN50D	MAG50D	ETS50ND	ETS50D3N-ETS50D4N	
LOGAN 1.6	(LS_)	04/07→		RUN50D	MAG50D	ETS50ND	ETS50D3N-ETS50D4N	
LOGAN 1.5 dCi	(LS_)	04/07→		RUN62D	MAG62D	ETS62ND	ETS60D3N	438320ES
LOGAN Estate 1.4	(KS_)	10/07→		RUN50D	MAG50D	ETS50ND	ETS50D3N-ETS50D4N	
LOGAN Estate 1.6	(KS_)	04/07→		RUN50D	MAG50D	ETS50ND	ETS50D3N-ETS50D4N	
LOGAN Estate 1.6	(KS_)	04/07→		RUN50D	MAG50D	ETS50ND	ETS50D3N-ETS50D4N	
LOGAN Estate 1.5 dCi	(KS_)	04/07→		RUN62D	MAG62D	ETS62ND	ETS60D3N	438320ES
MEGANE I 1.4 Eco (BA0T)	(BA0/1_)	01/96→03/99		RUN50D	MAG50D-MAG45D	ETS50ND-ETS45ND	ETS50D3N-ETS50D4N	436210ES
MEGANE I 1.4 e (BA0E, BA0V)	(BA0/1_)	01/96→		RUN50D	MAG50D-MAG45D	ETS50ND-ETS45ND	ETS50D3N-ETS50D4N	436210ES
MEGANE I 1.4 16V (BA0D, BA1H, BA0W, BA10)	(BA0/1_)	03/99→		RUN50D	MAG50D-MAG45D	ETS50ND-ETS45ND	ETS50D3N-ETS50D4N	436210ES
MEGANE I 1.6 i (BA0L)	(BA0/1_)	01/96→03/99		RUN50D	MAG50D-MAG45D	ETS50ND-ETS45ND	ETS50D3N-ETS50D4N	436210ES
MEGANE I 1.6	(BA0/1_)	02/00→09/00		RUN50D	MAG50D-MAG45D	ETS50ND-ETS45ND	ETS50D3N-ETS50D4N	436210ES
MEGANE I 1.6 e (BA0F, BA0S)	(BA0/1_)	01/96→03/99		RUN50D	MAG50D-MAG45D	ETS50ND-ETS45ND	ETS50D3N-ETS50D4N	436210ES
MEGANE I 1.6 16V (BA11, BA04, BA0B, BA1J)	(BA0/1_)	03/99→		RUN50D	MAG50D-MAG45D	ETS50ND-ETS45ND	ETS50D3N-ETS50D4N	436210ES

	Design		START	RUN	MAGIS	ETS	ETS alternative	ES
RENAULT								
MEGANE I 1.8 16V (BA06, BA12, BA1A, BA1M, BA1R)	(BA0/1_)	01/01→		RUN62D	MAG62D	ETS62ND	ETS60D3N	438320ES
MEGANE I 2.0 i	(BA0/1_)	03/99→		RUN62D	MAG62D	ETS62ND	ETS60D3N	438320ES
MEGANE I 2.0 i (BA0G)	(BA0/1_)	01/96→		RUN62D	MAG62D	ETS62ND	ETS60D3N	438320ES
MEGANE I 2.0 16V (BA0H)	(BA0/1_)	07/96→		RUN62D	MAG62D	ETS62ND	ETS60D3N	438320ES
MEGANE I 1.9 D Eco (B/SA0U, BA0A)	(BA0/1_)	01/96→		RUN72D	MAG74D	ETS74ND	ETS70D1N-ETS74DI	476420ES
MEGANE I 1.9 dTi (BA1U)	(BA0/1_)	02/01→		RUN72D	MAG74D	ETS74ND	ETS70D1N-ETS74DI	476420ES
MEGANE I 1.9 DTi	(BA0/1_)	02/00→09/00		RUN72D	MAG74D	ETS74ND	ETS70D1N-ETS74DI	476420ES
MEGANE I 1.9 dT (B/SA0K, B/SA0Y)	(BA0/1_)	01/96→		RUN72D	MAG74D	ETS74ND	ETS70D1N-ETS74DI	476420ES
MEGANE I 1.9 TDI	(BA0/1_)	09/96→		RUN72D	MAG74D	ETS74ND	ETS70D1N-ETS74DI	476420ES
MEGANE I 1.9 D	(BA0/1_)	10/96→02/99		RUN72D	MAG74D	ETS74ND	ETS70D1N-ETS74DI	476420ES
MEGANE I 1.9 dTi (BA08, BA0N)	(BA0/1_)	03/97→02/01		RUN72D	MAG74D	ETS74ND	ETS70D1N-ETS74DI	476420ES
MEGANE I 1.9 dCi (BA05, BA1F)	(BA0/1_)	02/01→		RUN72D	MAG74D	ETS74ND	ETS70D1N-ETS74DI	476420ES
MEGANE I 1.9 DCi	(BA0/1_)	03/99→07/03		RUN72D	MAG74D	ETS74ND	ETS70D1N-ETS74DI	476420ES
MEGANE I Classic 1.4 (LA0E, LA0V)	(LA0/1_)	09/96→		RUN50D	MAG50D-MAG45D	ETS50ND-ETS45ND	ETS50D3N-ETS50D4N	436210ES
MEGANE I Classic 1.4 16V (LA0D, LA1H, lA0W, LA10)	(LA0/1_)	03/99→		RUN50D	MAG50D-MAG45D	ETS50ND-ETS45ND	ETS50D3N-ETS50D4N	436210ES
MEGANE I Classic 1.6 i (LA0L)	(LA0/1_)	09/96→03/99		RUN50D	MAG50D-MAG45D	ETS50ND-ETS45ND	ETS50D3N-ETS50D4N	436210ES
MEGANE I Classic 1.6 e (LA0F, LA0S)	(LA0/1_)	09/96→03/99		RUN50D	MAG50D-MAG45D	ETS50ND-ETS45ND	ETS50D3N-ETS50D4N	436210ES
MEGANE I Classic 1.6 16V (La04, LA11, LA0B, LA1C, LA1J)	(LA0/1_)	03/99→		RUN50D	MAG50D-MAG45D	ETS50ND-ETS45ND	ETS50D3N-ETS50D4N	436210ES
MEGANE I Classic 1.8 16V (LA06, LA12, LA1A, LA1M, LA1R)	(LA0/1_)	01/01→		RUN62D	MAG62D	ETS62ND	ETS60D3N	438320ES
MEGANE I Classic 2.0 i	(LA0/1_)	03/99→		RUN62D	MAG62D	ETS62ND	ETS60D3N	438320ES
MEGANE I Classic 2.0 i (LA07, LA0G)	(LA0/1_)	09/96→		RUN62D	MAG62D	ETS62ND	ETS60D3N	438320ES
MEGANE I Classic 1.9 D (LA0A, LA0U)	(LA0/1_)	09/96→		RUN72D	MAG74D	ETS74ND	ETS70D1N-ETS74DI	476420ES
MEGANE I Classic 1.9 dTi (LA1U)	(LA0/1_)	02/01→		RUN72D	MAG74D	ETS74ND	ETS70D1N-ETS74DI	476420ES
MEGANE I Classic 1.9 dT (LA0K, LA0Y)	(LA0/1_)	09/96→		RUN72D	MAG74D	ETS74ND	ETS70D1N-ETS74DI	476420ES
MEGANE I Classic 1.9 TDI	(LA0/1_)	09/96→		RUN72D	MAG74D	ETS74ND	ETS70D1N-ETS74DI	476420ES
MEGANE I Classic 1.9 dTi (LA08, LA0N)	(LA0/1_)	03/97→02/01		RUN72D	MAG74D	ETS74ND	ETS70D1N-ETS74DI	476420ES
MEGANE I Classic 1.9 dCi (LA05, LA1F)	(LA0/1_)	02/01→		RUN72D	MAG74D	ETS74ND	ETS70D1N-ETS74DI	476420ES
MEGANE I Grandtour 1.4 e (KA0V)	(KA0/1_)	03/99→		RUN50D	MAG50D-MAG45D	ETS50ND-ETS45ND	ETS50D3N-ETS50D4N	436210ES
MEGANE I Grandtour 1.4 16V (KA0D, KA1H, KA0W, KA10)	(KA0/1_)	03/99→		RUN50D	MAG50D-MAG45D	ETS50ND-ETS45ND	ETS50D3N-ETS50D4N	436210ES
MEGANE I Grandtour 1.6 e (KA0F)	(KA0/1_)	03/99→		RUN50D	MAG50D-MAG45D	ETS50ND-ETS45ND	ETS50D3N-ETS50D4N	436210ES
MEGANE I Grandtour 1.6 16V (KA0B, KA04, KA11)	(KA0/1_)	03/99→		RUN50D	MAG50D-MAG45D	ETS50ND-ETS45ND	ETS50D3N-ETS50D4N	436210ES
MEGANE I Grandtour 1.8 16V (KA0S, KA12, KA1A, KA1M, KA1R)	(KA0/1_)	01/01→		RUN62D	MAG62D	ETS62ND	ETS60D3N	438320ES
MEGANE I Grandtour 1.9 D (KA0J, KA0R)	(KA0/1_)	04/99→		RUN72D	MAG74D	ETS74ND	ETS70D1N-ETS74DI	476420ES
MEGANE I Grandtour 1.9 dTi (KA1U)	(KA0/1_)	02/01→		RUN72D	MAG74D	ETS74ND	ETS70D1N-ETS74DI	476420ES
MEGANE I Grandtour 1.9 dTi (KA0N)	(KA0/1_)	03/99→02/01		RUN72D	MAG74D	ETS74ND	ETS70D1N-ETS74DI	476420ES
MEGANE I Grandtour 1.9 dCi (KA05, KA1F)	(KA0/1_)	02/01→		RUN72D	MAG74D	ETS74ND	ETS70D1N-ETS74DI	476420ES
MEGANE I Coach 1.4 16V (DA0D, DA1H, DA0W, DA10)	(DA0/1_)	03/99→08/03		RUN50D	MAG50D-MAG45D	ETS50ND-ETS45ND	ETS50D3N-ETS50D4N	436210ES

	Design		START	RUN	MAGIS	ETS	ETS alternative	ES
RENAULT								
MEGANE I Coach 1.6 e (DA0F)	(DA0/1_)	03/96→03/99		RUN50D	MAG50D-MAG45D	ETS50ND-ETS45ND	ETS50D3N-ETS50D4N	436210ES
MEGANE I Coach 1.6 16V (DA0B, DA04, DA11)	(DA0/1_)	03/99→08/03		RUN50D	MAG50D-MAG45D	ETS50ND-ETS45ND	ETS50D3N-ETS50D4N	436210ES
MEGANE I Coach 2.0 i	(DA0/1_)	03/99→08/03			MAG72DB	ETS71NDB		
MEGANE I Coach 2.0 i (DA0G)	(DA0/1_)	03/96→08/03			MAG72DB	ETS71NDB		
MEGANE I Coach 2.0 16V	(DA0/1_)	01/02→08/03		RUN62D	MAG62D	ETS62ND	ETS60D3N	438320ES
MEGANE I Coach 2.0 16V IDE (DA03, DA0P, DA14)	(DA0/1_)	11/99→08/03			MAG72DB	ETS71NDB		
MEGANE I Coach 2.0 16V (DA0H)	(DA0/1_)	03/96→11/99		RUN50D	MAG50D	ETS50ND	ETS50D3N-ETS50D4N	
MEGANE I Coach 1.9 dTi (DA0N)	(DA0/1_)	03/97→02/01		RUN72D	MAG74D	ETS74ND	ETS70D1N-ETS74DI	476420ES
MEGANE I Coach 1.9 dCi (DA05, DA1F)	(DA0/1_)	02/01→08/03		RUN72D	MAG74D	ETS74ND	ETS70D1N-ETS74DI	476420ES
MEGANE I Coach 1.9 DCi	(DA0/1_)	03/99→09/00		RUN72D	MAG74D	ETS74ND	ETS70D1N-ETS74DI	476420ES
MEGANE I Cabriolet 1.4 16V (EA0D, EA1H, EA0W, EA10)	(EA0/1_)	03/99→		RUN50D	MAG50D	ETS50ND	ETS50D3N-ETS50D4N	
MEGANE I Cabriolet 1.6 e (EA0F)	(EA0/1_)	10/96→03/99		RUN50D	MAG50D	ETS50ND	ETS50D3N-ETS50D4N	
MEGANE I Cabriolet 1.6 16V (EA0B, EA04, EA11)	(EA0/1_)	03/99→		RUN50D	MAG50D	ETS50ND	ETS50D3N-ETS50D4N	
MEGANE I Cabriolet 2.0 (EA0G)	(EA0/1_)	04/97→		RUN62D	MAG62D	ETS62ND	ETS60D3N	438320ES
MEGANE I Cabriolet 2.0 i (EA0G)	(EA0/1_)	03/99→		RUN62D	MAG62D	ETS62ND	ETS60D3N	438320ES
MEGANE I Cabriolet 2.0 16V	(EA0/1_)	01/02→		RUN62D	MAG62D	ETS62ND	ETS60D3N	438320ES
MEGANE I Cabriolet 2.0 16V IDE (EA03, EA0P, EA14)	(EA0/1_)	11/99→		RUN62D	MAG62D	ETS62ND	ETS60D3N	438320ES
MEGANE I Cabriolet 2.0 16V (EA0H)	(EA0/1_)	10/96→11/99		RUN62D	MAG62D	ETS62ND	ETS60D3N	438320ES
MEGANE Scenic 1.4 i (JA0E)	(JA0/1_)	01/97→09/99		RUN50D	MAG50D	ETS50ND	ETS50D3N-ETS50D4N	
MEGANE Scenic 1.6 i (JA0L)	(JA0/1_)	01/97→09/99		RUN50D	MAG50D	ETS50ND	ETS50D3N-ETS50D4N	
MEGANE Scenic 1.6 e (JA0F)	(JA0/1_)	01/97→09/99		RUN50D	MAG50D	ETS50ND	ETS50D3N-ETS50D4N	
MEGANE Scenic 2.0 i (JA0G)	(JA0/1_)	01/99→09/99		RUN62D	MAG62D	ETS62ND	ETS60D3N	438320ES
MEGANE Scenic 2.0 i (JA0G)	(JA0/1_)	01/97→09/99		RUN62D	MAG62D	ETS62ND	ETS60D3N	438320ES
MEGANE Scenic 1.9 D (JA0J)	(JA0/1_)	03/97→09/99		RUN72D	MAG74D	ETS74ND	ETS70D1N-ETS74DI	476420ES
MEGANE Scenic 1.9 dT (JA0K, JA0Y)	(JA0/1_)	01/97→09/99	AGM70D	RUN72D	MAG74D	ETS74ND	ETS70D1N-ETS74DI	476420ES
MEGANE Scenic 1.9 dTi (JA0N)	(JA0/1_)	04/97→09/99		RUN72D	MAG74D	ETS74ND	ETS70D1N-ETS74DI	476420ES
MEGANE II 1.4 16V	(BM0/1_, CM0/1_)	10/03→		RUN50D	MAG50D	ETS50ND	ETS50D3N-ETS50D4N	
MEGANE II 1.4 16V (BM0B, CM0B)	(BM0/1_, CM0/1_)	11/02→		RUN50D	MAG50D	ETS50ND	ETS50D3N-ETS50D4N	
MEGANE II 1.6	(BM0/1_, CM0/1_)	06/05→		RUN62D	MAG62D	ETS62ND	ETS60D3N	438320ES
MEGANE II 1.6 Flex-Fuel	(BM0/1_, CM0/1_)	01/07→		RUN62D	MAG62D	ETS62ND	ETS60D3N	438320ES
MEGANE II 1.6 16V	(BM0/1_, CM0/1_)	01/07→		RUN62D	MAG62D	ETS62ND	ETS60D3N	438320ES
MEGANE II 1.6 16V (BM0C, CM0C)	(BM0/1_, CM0/1_)	11/02→		RUN50D	MAG50D	ETS50ND	ETS50D3N-ETS50D4N	
MEGANE II 2.0 16V (BM0U, CM0U)	(BM0/1_, CM0/1_)	11/02→		RUN62D	MAG62D	ETS62ND	ETS60D3N	438320ES
MEGANE II 2.0 16V Turbo	(BM0/1_, CM0/1_)	05/04→		RUN62D	MAG62D	ETS62ND	ETS60D3N	438320ES
MEGANE II 2.0	(BM0/1_, CM0/1_)	08/06→		RUN62D	MAG62D	ETS62ND	ETS60D3N	438320ES
MEGANE II 2.0 Renault Sport	(BM0/1_, CM0/1_)	05/04→		RUN62D	MAG62D	ETS62ND	ETS60D3N	438320ES
MEGANE II 1.5 dCi (BM0F, CM0F)	(BM0/1_, CM0/1_)	11/02→		RUN72D	MAG74D	ETS74ND	ETS70D1N-ETS74DI	476420ES
MEGANE II 1.5 dCi	(BM0/1_, CM0/1_)	05/05→		RUN72D	MAG74D	ETS74ND	ETS70D1N-ETS74DI	476420ES
MEGANE II 1.5 dCi	(BM0/1_, CM0/1_)	10/03→		RUN72D	MAG74D	ETS74ND	ETS70D1N-ETS74DI	476420ES
MEGANE II 1.5 dCi	(BM0/1_, CM0/1_)	01/07→		RUN62D	MAG62D	ETS62ND	ETS60D3N	438320ES
MEGANE II 1.5 dCi	(BM0/1_, CM0/1_)	05/05→		RUN72D	MAG74D	ETS74ND	ETS70D1N-ETS74DI	476420ES
MEGANE II 1.9 dCi	(BM0/1_, CM0/1_)	11/02→12/05			MAG72DB	ETS71NDB		

	Design		START	RUN	MAGIS	ETS	ETS alternative	ES
RENAULT								
MEGANE II 1.9 dCi	(BM0/1_, CM0/1_)	03/04→		RUN72D	MAG74D	ETS74ND	ETS70D1N-ETS74DI	476420ES
MEGANE II 1.9 dCi	(BM0/1_, CM0/1_)	05/05→		RUN72D	MAG74D	ETS74ND	ETS70D1N-ETS74DI	476420ES
MEGANE II 1.9 dCi (BM0G, CM0G)	(BM0/1_, CM0/1_)	11/02→		RUN72D	MAG74D	ETS74ND	ETS70D1N-ETS74DI	476420ES
MEGANE II 1.9 dCi	(BM0/1_, CM0/1_)	05/05→		RUN72D	MAG74D	ETS74ND	ETS70D1N-ETS74DI	476420ES
MEGANE II 2.0 dCi	(BM0/1_, CM0/1_)	09/05→		RUN72D	MAG74D	ETS74ND	ETS70D1N-ETS74DI	476420ES
MEGANE II 2.0 dCi	(BM0/1_, CM0/1_)	01/07→		RUN72D	MAG74D	ETS74ND	ETS70D1N-ETS74DI	476420ES
MEGANE II Saloon 1.4	(LM0/1_)	09/03→		RUN50D	MAG50D	ETS50ND	ETS50D3N-ETS50D4N	
MEGANE II Saloon 1.4	(LM0/1_)	09/03→		RUN50D	MAG50D	ETS50ND	ETS50D3N-ETS50D4N	
MEGANE II Saloon 1.6	(LM0/1_)	09/03→		RUN62D	MAG62D	ETS62ND	ETS60D3N	438320ES
MEGANE II Saloon 1.6	(LM0/1_)	05/05→		RUN62D	MAG62D	ETS62ND	ETS60D3N	438320ES
MEGANE II Saloon 1.6 16V	(LM0/1_)	01/07→		RUN62D	MAG62D	ETS62ND	ETS60D3N	438320ES
MEGANE II Saloon 1.6	(LM0/1_)	09/03→		RUN50D	MAG50D	ETS50ND	ETS50D3N-ETS50D4N	
MEGANE II Saloon 2.0	(LM0/1_)	09/03→		RUN62D	MAG62D	ETS62ND	ETS60D3N	438320ES
MEGANE II Saloon 1.5 dCi	(LM0/1_)	09/03→		RUN72D	MAG74D	ETS74ND	ETS70D1N-ETS74DI	476420ES
MEGANE II Saloon 1.5 dCi	(LM0/1_)	05/05→		RUN72D	MAG74D	ETS74ND	ETS70D1N-ETS74DI	476420ES
MEGANE II Saloon 1.5 dCi	(LM0/1_)	02/04→		RUN72D	MAG74D	ETS74ND	ETS70D1N-ETS74DI	476420ES
MEGANE II Saloon 1.5 dCi	(LM0/1_)	01/07→		RUN62D	MAG62D	ETS62ND	ETS60D3N	438320ES
MEGANE II Saloon 1.5 dCi	(LM0/1_)	05/05→		RUN72D	MAG74D	ETS74ND	ETS70D1N-ETS74DI	476420ES
MEGANE II Saloon 1.9 dCi	(LM0/1_)	09/03→12/05			MAG72DB	ETS71NDB		
MEGANE II Saloon 1.9 dCi	(LM0/1_)	03/04→		RUN72D	MAG74D	ETS74ND	ETS70D1N-ETS74DI	476420ES
MEGANE II Saloon 1.9 dCi	(LM0/1_)	05/05→		RUN72D	MAG74D	ETS74ND	ETS70D1N-ETS74DI	476420ES
MEGANE II Saloon 1.9 dCi	(LM0/1_)	09/03→		RUN72D	MAG74D	ETS74ND	ETS70D1N-ETS74DI	476420ES
MEGANE II Saloon 1.9 dCi	(LM0/1_)	05/05→		RUN72D	MAG74D	ETS74ND	ETS70D1N-ETS74DI	476420ES
MEGANE II Saloon 2.0 dCi	(LM0/1_)	09/05→		RUN72D	MAG74D	ETS74ND	ETS70D1N-ETS74DI	476420ES
MEGANE II Estate 1.4	(KM0/1_)	08/03→		RUN50D	MAG50D	ETS50ND	ETS50D3N-ETS50D4N	
MEGANE II Estate 1.6 16V	(KM0/1_)	01/07→		RUN62D	MAG62D	ETS62ND	ETS60D3N	438320ES
MEGANE II Estate 1.6	(KM0/1_)	08/03→		RUN50D	MAG50D	ETS50ND	ETS50D3N-ETS50D4N	
MEGANE II Estate 1.6 16V Hi-Flex	(KM0/1_)	02/08→		RUN62D	MAG62D	ETS62ND	ETS60D3N	438320ES
MEGANE II Estate 2.0	(KM0/1_)	08/03→		RUN62D	MAG62D	ETS62ND	ETS60D3N	438320ES
MEGANE II Estate 1.5 dCi	(KM0/1_)	08/03→		RUN72D	MAG74D	ETS74ND	ETS70D1N-ETS74DI	476420ES
MEGANE II Estate 1.5 dCi	(KM0/1_)	05/05→		RUN72D	MAG74D	ETS74ND	ETS70D1N-ETS74DI	476420ES
MEGANE II Estate 1.5 dCi	(KM0/1_)	02/04→		RUN72D	MAG74D	ETS74ND	ETS70D1N-ETS74DI	476420ES
MEGANE II Estate 1.5 dCi	(KM0/1_)	01/07→		RUN62D	MAG62D	ETS62ND	ETS60D3N	438320ES
MEGANE II Estate 1.5 dCi	(KM0/1_)	05/05→		RUN72D	MAG74D	ETS74ND	ETS70D1N-ETS74DI	476420ES
MEGANE II Estate 1.9 dCi	(KM0/1_)	04/04→12/05			MAG72DB	ETS71NDB		
MEGANE II Estate 1.9 dCi	(KM0/1_)	03/04→		RUN72D	MAG74D	ETS74ND	ETS70D1N-ETS74DI	476420ES
MEGANE II Estate 1.9 dCi	(KM0/1_)	05/05→		RUN72D	MAG74D	ETS74ND	ETS70D1N-ETS74DI	476420ES
MEGANE II Estate 1.9 dCi	(KM0/1_)	08/03→		RUN72D	MAG74D	ETS74ND	ETS70D1N-ETS74DI	476420ES
MEGANE II Estate 1.9 dCi	(KM0/1_)	05/05→		RUN72D	MAG74D	ETS74ND	ETS70D1N-ETS74DI	476420ES
MEGANE II Estate 2.0 dCi	(KM0/1_)	09/05→		RUN72D	MAG74D	ETS74ND	ETS70D1N-ETS74DI	476420ES
MEGANE II Coupe-Cabriolet 1.6	(EM0/1_)	06/05→		RUN62D	MAG62D	ETS62ND	ETS60D3N	438320ES
MEGANE II Coupe-Cabriolet 1.6 16V	(EM0/1_)	01/07→		RUN62D	MAG62D	ETS62ND	ETS60D3N	438320ES
MEGANE II Coupe-Cabriolet 1.6	(EM0/1_)	09/03→		RUN62D	MAG62D	ETS62ND	ETS60D3N	438320ES
MEGANE II Coupe-Cabriolet 2.0	(EM0/1_)	09/03→		RUN62D	MAG62D	ETS62ND	ETS60D3N	438320ES
MEGANE II Coupe-Cabriolet 2.0 16V Turbo	(EM0/1_)	05/04→		RUN62D	MAG62D	ETS62ND	ETS60D3N	438320ES
MEGANE II Coupe-Cabriolet 1.5 dCi	(EM0/1_)	05/05→		RUN72D	MAG74D	ETS74ND	ETS70D1N-ETS74DI	476420ES

	Design		START	RUN	MAGIS	ETS	ETS alternative	ES
RENAULT								
MEGANE II Coupe-Cabriolet 1.5 dCi	(EM0/1_)	01/07→		RUN62D	MAG62D	ETS62ND	ETS60D3N	438320ES
MEGANE II Coupe-Cabriolet 1.5 dCi	(EM0/1_)	03/06→		RUN72D	MAG74D	ETS74ND	ETS70D1N-ETS74DI	476420ES
MEGANE II Coupe-Cabriolet 1.9 dCi	(EM0/1_)	05/05→		RUN72D	MAG74D	ETS74ND	ETS70D1N-ETS74DI	476420ES
MEGANE II Coupe-Cabriolet 1.9 dCi	(EM0/1_)	09/03→		RUN72D	MAG74D	ETS74ND	ETS70D1N-ETS74DI	476420ES
MEGANE II Coupe-Cabriolet 1.9 dCi	(EM0/1_)	05/05→		RUN72D	MAG74D	ETS74ND	ETS70D1N-ETS74DI	476420ES
MEGANE II Coupe-Cabriolet 2.0 dCi	(EM0/1_)	09/05→		RUN72D	MAG74D	ETS74ND	ETS70D1N-ETS74DI	476420ES
MEGANE III Hatchback 1.4 16V	(BZ0_)	04/09→		RUN50D	MAG50D	ETS50ND	ETS50D3N-ETS50D4N	
MEGANE III Hatchback 1.6 16V (BZ0H)	(BZ0_)	11/08→		RUN50D	MAG50D	ETS50ND	ETS50D3N-ETS50D4N	
MEGANE III Hatchback 1.6 16V (BZ0U)	(BZ0_)	11/08→		RUN50D	MAG50D	ETS50ND	ETS50D3N-ETS50D4N	
MEGANE III Hatchback 1.6 16V Bifuel	(BZ0_)	11/08→		RUN50D	MAG50D	ETS50ND	ETS50D3N-ETS50D4N	
MEGANE III Hatchback 2.0 16V (BZ0K)	(BZ0_)	11/08→		RUN62D	MAG62D	ETS62ND	ETS60D3N	438320ES
MEGANE III Hatchback 2.0 16V (BZ0G)	(BZ0_)	02/09→		RUN62D	MAG62D	ETS62ND	ETS60D3N	438320ES
MEGANE III Hatchback 1.5 dCi (BZ0C)	(BZ0_)	11/08→		RUN62D	MAG62D	ETS62ND	ETS60D3N	438320ES
MEGANE III Hatchback 1.5 dCi (BZ0D)	(BZ0_)	02/09→		RUN62D	MAG62D	ETS62ND	ETS60D3N	438320ES
MEGANE III Hatchback 1.5 dCi	(BZ0_)	11/08→		RUN62D	MAG62D	ETS62ND	ETS60D3N	438320ES
MEGANE III Hatchback 1.9 dCi (BZ0N, BZ0J)	(BZ0_)	11/08→		RUN62D	MAG62D	ETS62ND	ETS60D3N	438320ES
MEGANE III Hatchback 2.0 dCi	(BZ0_)	04/09→		RUN72D	MAG74D	ETS74ND	ETS70D1N-ETS74DI	476420ES
MEGANE III Saloon 1.6 16V		06/09→		RUN62D	MAG62D	ETS62ND	ETS60D3N	438320ES
MEGANE III Saloon 1.9 dCi		06/09→		RUN62D	MAG62D	ETS62ND	ETS60D3N	438320ES
MEGANE III Estate 1.4 16V (KZ0F, KZ1F)	(KZ0/1)	05/09→		RUN50D	MAG50D	ETS50ND	ETS50D3N-ETS50D4N	
MEGANE III Estate 1.6 16V (KZ0H)	(KZ0/1)	05/09→		RUN50D	MAG50D	ETS50ND	ETS50D3N-ETS50D4N	
MEGANE III Estate 1.6 16V (KZ0U, KZ1B)	(KZ0/1)	05/09→		RUN50D	MAG50D	ETS50ND	ETS50D3N-ETS50D4N	
MEGANE III Estate 1.6 16V Bifuel (KZ03)	(KZ0/1)	11/08→		RUN50D	MAG50D	ETS50ND	ETS50D3N-ETS50D4N	
MEGANE III Estate 2.0 16V (KZ0G)	(KZ0/1)	05/09→		RUN62D	MAG62D	ETS62ND	ETS60D3N	438320ES
MEGANE III Estate 2.0 16V (KZ0K)	(KZ0/1)	11/08→		RUN62D	MAG62D	ETS62ND	ETS60D3N	438320ES
MEGANE III Estate 1.5 dCi (KZ0C)	(KZ0/1)	05/09→		RUN62D	MAG62D	ETS62ND	ETS60D3N	438320ES
MEGANE III Estate 1.5 dCi (KZ0D, KZ1G)	(KZ0/1)	02/09→		RUN62D	MAG62D	ETS62ND	ETS60D3N	438320ES
MEGANE III Estate 1.9 dCi (KZ0N)	(KZ0/1)	05/09→		RUN72D	MAG74D	ETS74ND	ETS70D1N-ETS74DI	476420ES
MEGANE III Estate 2.0 dCi (KZ0L)	(KZ0/1)	04/09→		RUN72D	MAG74D	ETS74ND	ETS70D1N-ETS74DI	476420ES
MEGANE III Coupe 1.4 16V (DZ0F, DZ1V)	(DZ0_)	04/09→		RUN50D	MAG50D	ETS50ND	ETS50D3N-ETS50D4N	
MEGANE III Coupe 1.6 16V (DZ0H)	(DZ0_)	11/08→		RUN62D	MAG62D	ETS62ND	ETS60D3N	438320ES
MEGANE III Coupe 1.6 16V (DZ0U, DZ03, DZ1H)	(DZ0_)	11/08→		RUN62D	MAG62D	ETS62ND	ETS60D3N	438320ES
MEGANE III Coupe 1.6 16V Bifuel	(DZ0_)	11/08→		RUN62D	MAG62D	ETS62ND	ETS60D3N	438320ES
MEGANE III Coupe 2.0 16V (DZ0G, DZ1E)	(DZ0_)	05/09→		RUN62D	MAG62D	ETS62ND	ETS60D3N	438320ES
MEGANE III Coupe 2.0 16V (DZ0K)	(DZ0_)	11/08→		RUN62D	MAG62D	ETS62ND	ETS60D3N	438320ES
MEGANE III Coupe 1.5 dCi (DZ0C, DZ1A)	(DZ0_)	11/08→		RUN62D	MAG62D	ETS62ND	ETS60D3N	438320ES
MEGANE III Coupe 1.5 dCi (DZ0D, DZ1F, DZ1G)	(DZ0_)	02/09→		RUN62D	MAG62D	ETS62ND	ETS60D3N	438320ES
MEGANE III Coupe 1.9 dCi (DZ0N, DZ0J, DZ1J, DZ1K)	(DZ0_)	11/08→		RUN72D	MAG74D	ETS74ND	ETS70D1N-ETS74DI	476420ES
MEGANE III Coupe 2.0 dCi (DZ0Y)	(DZ0_)	04/09→		RUN72D	MAG74D	ETS74ND	ETS70D1N-ETS74DI	476420ES

	Design		START	RUN	MAGIS	ETS	ETS alternative	ES
RENAULT								
MEGANE III Coupe 2.0 dCi (DZ0L)	(DZ0_)	04/09→		RUN72D	MAG74D	ETS74ND	ETS70D1N-ETS74DI	476420ES
MEGANE CC 1.4 16V		06/10→		RUN50D	MAG50D	ETS50ND	ETS50D3N-ETS50D4N	
MEGANE CC 1.5 dCi		06/10→		RUN72D	MAG74D	ETS74ND	ETS70D1N-ETS74DI	476420ES
MEGANE CC 1.9 dCi		06/10→		RUN72D	MAG74D	ETS74ND	ETS70D1N-ETS74DI	476420ES
MEGANE CC 2.0 dCi		06/10→		RUN72D	MAG74D	ETS74ND	ETS70D1N-ETS74DI	476420ES
MODUS 1.2	(F/JP0_)	05/05→			MAG44DB	ETS44NDB		ES45NDB
MODUS 1.2 (JP0C, JP0K)	(F/JP0_)	12/04→			MAG44DB	ETS44NDB		ES45NDB
MODUS 1.2 16V Hi-Flex	(F/JP0_)	10/08→			MAG44DB	ETS44NDB		ES45NDB
MODUS 1.2	(F/JP0_)	12/04→			MAG44DB	ETS44NDB		ES45NDB
MODUS 1.2 16V	(F/JP0_)	05/07→			MAG44DB	ETS44NDB		ES45NDB
MODUS 1.4 (JP01, JP0J)	(F/JP0_)	12/04→		RUN50D	MAG50D	ETS50ND	ETS50D3N-ETS50D4N	
MODUS 1.6	(F/JP0_)	12/04→		RUN50D	MAG50D	ETS50ND	ETS50D3N-ETS50D4N	
MODUS 1.6 (JP0B)	(F/JP0_)	12/04→		RUN50D	MAG50D	ETS50ND	ETS50D3N-ETS50D4N	
MODUS 1.5 dCi	(F/JP0_)	12/04→			MAG62DB	ETS60NDB-ETS50NDB		ES60NDB
MODUS 1.5 dCi	(F/JP0_)	12/04→		RUN72D	MAG74D	ETS74ND	ETS70D1N-ETS74DI	476420ES
MODUS 1.5 dCi	(F/JP0_)	12/04→		RUN72D	MAG74D	ETS74ND	ETS70D1N-ETS74DI	476420ES
MODUS 1.5 dCi	(F/JP0_)	05/07→			MAG62DB	ETS60NDB-ETS50NDB		ES60NDB
MODUS 1.5 dCi (JP0G, JP0H)	(F/JP0_)	05/05→		RUN72D	MAG74D	ETS74ND	ETS70D1N-ETS74DI	476420ES
RAPID Box 1.1	(F40_, G40_)	09/93→04/95		RUN50D	MAG50D-MAG45D	ETS50ND-ETS45ND	ETS50D3N-ETS50D4N	436210ES
RAPID Box 1.2	(F40_, G40_)	05/95→11/98		RUN50D	MAG50D-MAG45D	ETS50ND-ETS45ND	ETS50D3N-ETS50D4N	436210ES
RAPID Box 1.2 (F406, G40A)	(F40_, G40_)	09/91→03/98		RUN50D	MAG50D-MAG45D	ETS50ND-ETS45ND	ETS50D3N-ETS50D4N	436210ES
RAPID Box 1.4 RN	(F40_, G40_)	09/91→08/93		RUN50D	MAG50D-MAG45D	ETS50ND-ETS45ND	ETS50D3N-ETS50D4N	436210ES
RAPID Box 1.4	(F40_, G40_)	09/91→08/93		RUN50D	MAG50D-MAG45D	ETS50ND-ETS45ND	ETS50D3N-ETS50D4N	436210ES
RAPID Box 1.4 (F40U, F40V)	(F40_, G40_)	09/91→03/98		RUN50D	MAG50D-MAG45D	ETS50ND-ETS45ND	ETS50D3N-ETS50D4N	436210ES
RAPID Box 1.4 (F40D)	(F40_, G40_)	01/94→03/98		RUN50D	MAG50D-MAG45D	ETS50ND-ETS45ND	ETS50D3N-ETS50D4N	436210ES
RAPID Box 1.4	(F40_, G40_)	05/95→08/97		RUN50D	MAG50D-MAG45D	ETS50ND-ETS45ND	ETS50D3N-ETS50D4N	436210ES
RAPID Box 1.9 D (F40R)	(F40_, G40_)	09/94→03/98		RUN72D	MAG74D	ETS74ND	ETS70D1N-ETS74DI	476420ES
RAPID Box 1.9 D (F40P, F40N, F40E)	(F40_, G40_)	09/91→03/98		RUN72D	MAG74D	ETS74ND	ETS70D1N-ETS74DI	476420ES
SAFRANE I 2.0 (B540)	(B54_)	11/92→07/96		RUN62D	MAG62D	ETS62ND	ETS60D3N	438320ES
SAFRANE I 2.0 12V (B542, B54E)	(B54_)	04/92→07/96		RUN62D	MAG62D	ETS62ND	ETS60D3N	438320ES
SAFRANE I 2.2 (B541)	(B54_)	04/92→07/96		RUN62D	MAG62D	ETS62ND	ETS60D3N	438320ES
SAFRANE I 2.2 (B543)	(B54_)	04/92→07/96		RUN62D	MAG62D	ETS62ND	ETS60D3N	438320ES
SAFRANE I 3.0 V6 (B54B, B544)	(B54_)	12/92→07/96		RUN72D	MAG74D	ETS74ND	ETS70D1N-ETS74DI	476420ES
SAFRANE I 3.0 V6 4x4 (B54B, B544)	(B54_)	12/92→07/96		RUN72D	MAG74D	ETS74ND	ETS70D1N-ETS74DI	476420ES
SAFRANE I 3.0 Biturbo 4x4 (B545)	(B54_)	02/93→07/96		RUN72D	MAG74D	ETS74ND	ETS70D1N-ETS74DI	476420ES
SAFRANE I 3.0	(B54_)	02/93→06/96		RUN72D	MAG74D	ETS74ND	ETS70D1N-ETS74DI	476420ES
SAFRANE I 2.1 dT (B546)	(B54_)	11/93→07/96		RUN72D	MAG74D	ETS74ND	ETS70D1N-ETS74DI	476420ES
SAFRANE I 2.5 dT (B548)	(B54_)	12/92→07/96		RUN72D	MAG74D	ETS74ND	ETS70D1N-ETS74DI	476420ES
SAFRANE II 2.0 16V (B54L)	(B54_)	07/96→12/00		RUN62D	MAG62D	ETS62ND	ETS60D3N	438320ES
SAFRANE II 2.5 20V (B54F)	(B54_)	07/96→12/00		RUN72D	MAG74D	ETS74ND	ETS70D1N-ETS74DI	476420ES
SAFRANE II 2.9 24V (B54N)	(B54_)	03/99→12/00		RUN72D	MAG74D	ETS74ND	ETS70D1N-ETS74DI	476420ES
SAFRANE II 3.0 V6	(B54_)	07/96→12/00		RUN72D	MAG74D	ETS74ND	ETS70D1N-ETS74DI	476420ES
SAFRANE II 2.2 dT (B54G)	(B54_)	07/96→12/00		RUN72D	MAG74D	ETS74ND	ETS70D1N-ETS74DI	476420ES
SANDERO 1.0 Hi-Flex		11/07→		RUN50D	MAG50D	ETS50ND	ETS50D3N-ETS50D4N	
SANDERO 1.4		02/09→		RUN50D	MAG50D	ETS50ND	ETS50D3N-ETS50D4N	
SANDERO 1.6		02/09→		RUN50D	MAG50D	ETS50ND	ETS50D3N-ETS50D4N	
SANDERO 1.6 Hi-Flex		11/07→		RUN50D	MAG50D	ETS50ND	ETS50D3N-ETS50D4N	

	Design		START	RUN	MAGIS	ETS	ETS alternative	ES
RENAULT								
SANDERO 1.6 Hi-Flex		11/07→		RUN50D	MAG50D	ETS50ND	ETS50D3N-ETS50D4N	
SCENIC I 1.4 16V (JA0D, JA1H, Ja0W, JA10)	(JA0/1_)	09/99→08/03			MAG44DB	ETS44NDB		ES45NDB
SCENIC I 1.6	(JA0/1_)	03/01→08/03			MAG44DB	ETS44NDB		ES45NDB
SCENIC I 1.6 16V (JA0B, JA04, JA11)	(JA0/1_)	09/99→08/03			MAG44DB	ETS44NDB		ES45NDB
SCENIC I 1.8 16V (JA12, JA1R, JA1M, JA1A)	(JA0/1_)	01/01→08/03			MAG62DB	ETS60NDB-ETS50NDB		ES60NDB
SCENIC I 1.8 4x4	(JA0/1_)	07/00→04/01			MAG62DB	ETS60NDB-ETS50NDB		ES60NDB
SCENIC I 2.0 16V RX4	(JA0/1_)	06/00→08/03			MAG62DB	ETS60NDB-ETS50NDB		ES60NDB
SCENIC I 2.0 16V (JA1B, JA1D)	(JA0/1_)	07/00→08/03			MAG62DB	ETS60NDB-ETS50NDB		ES60NDB
SCENIC I 2.0 16V IDE	(JA0/1_)	09/99→08/03			MAG62DB	ETS60NDB-ETS50NDB		ES60NDB
SCENIC I 1.9 dTi (JA1U)	(JA0/1_)	02/01→08/03			MAG62DB	ETS60NDB-ETS50NDB		ES60NDB
SCENIC I 1.9 dTi (JA0N)	(JA0/1_)	09/99→08/03			MAG62DB	ETS60NDB-ETS50NDB		ES60NDB
SCENIC I 1.9 dCi (JA05, JA1F)	(JA0/1_)	09/99→08/03			MAG62DB	ETS60NDB-ETS50NDB		ES60NDB
SCENIC I 1.9 dCi RX4	(JA0/1_)	11/00→08/03			MAG62DB	ETS60NDB-ETS50NDB		ES60NDB
SCENIC II 1.4 (JM0B, JM0H, JM1A)	(JM0/1_)	06/03→			MAG44DB	ETS44NDB		ES45NDB
SCENIC II 1.6	(JM0/1_)	06/06→			MAG62DB	ETS60NDB	ETS60D4N	ES60NDB
SCENIC II 1.6 16V	(JM0/1_)	01/07→			MAG62DB	ETS60NDB	ETS60D4N	ES60NDB
SCENIC II 1.6 (JM0C, JM0J, JM1B)	(JM0/1_)	06/03→			MAG62DB	ETS60NDB-ETS50NDB		ES60NDB
SCENIC II 2.0 (JM05, JM1N)	(JM0/1_)	06/03→			MAG62DB	ETS60NDB-ETS50NDB		ES60NDB
SCENIC II 2.0 16V Turbo (JM0W)	(JM0/1_)	05/04→			MAG62DB	ETS60NDB-ETS50NDB		ES60NDB
SCENIC II 1.5 dCi (JM0F)	(JM0/1_)	06/03→			MAG72DB	ETS71NDB		
SCENIC II 1.5 dCi	(JM0/1_)	05/05→			MAG72DB	ETS71NDB		
SCENIC II 1.5 dCi (JM02, JM13)	(JM0/1_)	11/03→			MAG72DB	ETS71NDB		
SCENIC II 1.5 dCi	(JM0/1_)	01/07→			MAG62DB	ETS60NDB	ETS60D4N	ES60NDB
SCENIC II 1.5 dCi	(JM0/1_)	05/05→			MAG72DB	ETS71NDB		
SCENIC II 1.9 dCi	(JM0/1_)	05/05→			MAG72DB	ETS71NDB		
SCENIC II 1.9 D	(JM0/1_)	06/06→			MAG72DB	ETS71NDB		
SCENIC II 1.9 dCi (JM12)	(JM0/1_)	06/03→			MAG72DB	ETS71NDB		
SCENIC II 1.9 dCi	(JM0/1_)	05/05→			MAG72DB	ETS71NDB		
SCENIC II 2.0 dCi	(JM0/1_)	09/05→			MAG72DB	ETS71NDB		
GRAND SCENIC II 1.6	(JM0/1_)	06/06→			MAG62DB	ETS60NDB	ETS60D4N	ES60NDB
GRAND SCENIC II 1.6	(JM0/1_)	04/04→			MAG62DB	ETS60NDB	ETS60D4N	ES60NDB
GRAND SCENIC II 2.0	(JM0/1_)	04/04→			MAG62DB	ETS60NDB-ETS50NDB		ES60NDB
GRAND SCENIC II 2.0	(JM0/1_)	04/04→			MAG62DB	ETS60NDB-ETS50NDB		ES60NDB
GRAND SCENIC II 1.5 dCi (JM02, JM13)	(JM0/1_)	04/04→			MAG72DB	ETS71NDB		
GRAND SCENIC II 1.5 dCi	(JM0/1_)	05/05→			MAG62DB	ETS60NDB	ETS60D4N	ES60NDB
GRAND SCENIC II 1.9 dCi	(JM0/1_)	05/05→			MAG72DB	ETS71NDB		
GRAND SCENIC II 1.9 dCi	(JM0/1_)	04/04→			MAG72DB	ETS71NDB		
GRAND SCENIC II 1.9 dCi	(JM0/1_)	05/05→			MAG72DB	ETS71NDB		
GRAND SCENIC II 2.0 dCi	(JM0/1_)	09/05→			MAG72DB	ETS71NDB		
SCENIC III 1.4 16V	(JZ0/1_)	02/09→		RUN50D	MAG50D	ETS50ND	ETS50D3N-ETS50D4N	
SCENIC III 1.6 16V	(JZ0/1_)	02/09→		RUN50D	MAG50D	ETS50ND	ETS50D3N-ETS50D4N	
SCENIC III 2.0 16V	(JZ0/1_)	02/09→		RUN62D	MAG62D	ETS62ND	ETS60D3N	438320ES
SCENIC III 1.5 dCi	(JZ0/1_)	02/09→		RUN62D	MAG62D	ETS62ND	ETS60D3N	438320ES
SCENIC III 1.9 dCi	(JZ0/1_)	02/09→			MAG72DB	ETS71NDB		
SCENIC III 2.0 dCi	(JZ0/1_)	02/09→			MAG72DB	ETS71NDB		

	Design		START	RUN	MAGIS	ETS	ETS alternative	ES
RENAULT								
SCENIC III 2.0 dCi	(JZ0/1_)	04/09→			MAG72DB	ETS71NDB		
GRAND SCENIC III 1.4 16V	(JZ0/1_)	02/09→		RUN50D	MAG50D	ETS50ND	ETS50D3N-ETS50D4N	
GRAND SCENIC III 1.6 16V	(JZ0/1_)	02/09→		RUN50D	MAG50D	ETS50ND	ETS50D3N-ETS50D4N	
GRAND SCENIC III 2.0 16V	(JZ0/1_)	02/09→		RUN62D	MAG62D	ETS62ND	ETS60D3N	438320ES
GRAND SCENIC III 1.5 dCi	(JZ0/1_)	02/09→		RUN62D	MAG62D	ETS62ND	ETS60D3N	438320ES
GRAND SCENIC III 1.9 dCi	(JZ0/1_)	02/09→			MAG72DB	ETS71NDB		
GRAND SCENIC III 2.0 dCi	(JZ0/1_)	02/09→			MAG72DB	ETS71NDB		
GRAND SCENIC III 2.0 dCi	(JZ0/1_)	04/09→			MAG72DB	ETS71NDB		
SPORT SPIDER 2.0	(EF0_)	12/95→08/96		RUN62D	MAG62D	ETS62ND	ETS60D3N	438320ES
SPORT SPIDER 2.0 16V	(EF0_)	03/95→10/99		RUN62D	MAG62D	ETS62ND	ETS60D3N	438320ES
THALIA 1.2	(LB0/1/2_)	02/98→10/03		RUN50D	MAG50D	ETS50ND	ETS50D3N-ETS50D4N	
THALIA 1.2 16V	(LB0/1/2_)	04/02→		RUN50D	MAG50D	ETS50ND	ETS50D3N-ETS50D4N	
THALIA 1.4	(LB0/1/2_)	08/00→		RUN50D	MAG50D	ETS50ND	ETS50D3N-ETS50D4N	
THALIA 1.4 16V	(LB0/1/2_)	08/00→		RUN50D	MAG50D	ETS50ND	ETS50D3N-ETS50D4N	
THALIA 1.6	(LB0/1/2_)	03/98→05/01		RUN50D	MAG50D	ETS50ND	ETS50D3N-ETS50D4N	
THALIA 1.6 16V	(LB0/1/2_)	04/02→		RUN50D	MAG50D	ETS50ND	ETS50D3N-ETS50D4N	
THALIA 2.0	(LB0/1/2_)	09/01→		RUN62D	MAG62D	ETS62ND	ETS60D3N	438320ES
THALIA 3.0 V6 Turbo Sport	(LB0/1/2_)	04/00→09/01		RUN62D	MAG62D	ETS62ND	ETS60D3N	438320ES
THALIA 3.0 V6 Turbo Sport	(LB0/1/2_)	06/02→		RUN62D	MAG62D	ETS62ND	ETS60D3N	438320ES
THALIA 1.5 dCi	(LB0/1/2_)	06/05→		RUN72D	MAG74D	ETS74ND	ETS70D1N-ETS74DI	476420ES
THALIA 1.5 dCi	(LB0/1/2_)	04/02→		RUN72D	MAG74D	ETS74ND	ETS70D1N-ETS74DI	476420ES
THALIA 1.5 dCi	(LB0/1/2_)	02/03→		RUN72D	MAG74D	ETS74ND	ETS70D1N-ETS74DI	476420ES
THALIA 1.5 dCi	(LB0/1/2_)	06/01→10/03		RUN72D	MAG74D	ETS74ND	ETS70D1N-ETS74DI	476420ES
THALIA 1.5 dCi	(LB0/1/2_)	06/01→		RUN72D	MAG74D	ETS74ND	ETS70D1N-ETS74DI	476420ES
THALIA 1.9 D	(LB0/1/2_)	02/98→05/01		RUN72D	MAG74D	ETS74ND	ETS70D1N-ETS74DI	476420ES
TWINGO 1.2 (C067)	(C06_)	05/96→		RUN50D	MAG50D-MAG45D	ETS50ND-ETS45ND	ETS50D3N-ETS50D4N	436210ES
TWINGO 1.2 (C066, C068)	(C06_)	05/96→		RUN50D	MAG50D-MAG45D	ETS50ND-ETS45ND	ETS50D3N-ETS50D4N	436210ES
TWINGO 1.2	(C06_)	09/98→08/00		RUN50D	MAG50D-MAG45D	ETS50ND-ETS45ND	ETS50D3N-ETS50D4N	436210ES
TWINGO 1.2 16V (C060)	(C06_)	08/04→		RUN50D	MAG50D-MAG45D	ETS50ND-ETS45ND	ETS50D3N-ETS50D4N	436210ES
TWINGO 1.2 16V (C06C, C06D, C06K)	(C06_)	01/01→		RUN50D	MAG50D-MAG45D	ETS50ND-ETS45ND	ETS50D3N-ETS50D4N	436210ES
TWINGO 1.2 (C063, C064)	(C06_)	03/93→10/96		RUN50D	MAG50D-MAG45D	ETS50ND-ETS45ND	ETS50D3N-ETS50D4N	436210ES
TWINGO Box 1.2 (S066, S068)	(S06_)	05/96→		RUN50D	MAG50D-MAG45D	ETS50ND-ETS45ND	ETS50D3N-ETS50D4N	436210ES
TWINGO Box 1.2 (S063, S064)	(S06_)	03/93→05/96		RUN50D	MAG50D-MAG45D	ETS50ND-ETS45ND	ETS50D3N-ETS50D4N	436210ES
TWINGO 1.2 (CN0D)	(CN0_)	03/07→			MAG44DB	ETS44NDB		ES45NDB
TWINGO 1.2 16V	(CN0_)	03/07→			MAG44DB	ETS44NDB		ES45NDB
TWINGO 1.2 16V (CN0A)	(CN0_)	03/07→			MAG44DB	ETS44NDB		ES45NDB
TWINGO 1.2 Turbo (CN0C)	(CN0_)	03/07→			MAG44DB	ETS44NDB		ES45NDB
TWINGO 1.6 RS (CN0R)	(CN0_)	05/08→			MAG44DB	ETS44NDB		ES45NDB
TWINGO 1.5 dCi (CN0E)	(CN0_)	03/07→		RUN62D	MAG62D	ETS62ND	ETS60D3N	438320ES
TWINGO 1.5 dCi (CN0U)	(CN0_)	04/08→		RUN62D	MAG62D	ETS62ND	ETS60D3N	438320ES
VEL SATIS 2.0	(BJ0_)	04/05→			MAG72DB	ETS71NDB		
VEL SATIS 2.0 16V Turbo (BJ0K)	(BJ0_)	06/02→			MAG72DB	ETS71NDB		
VEL SATIS 2.0 16 V Turbo	(BJ0_)	04/04→			MAG72DB	ETS71NDB		
VEL SATIS 3.5	(BJ0_)	10/04→			MAG72DB	ETS71NDB		
VEL SATIS 3.5 V6 (BJ0V, BJ0U)	(BJ0_)	06/02→			MAG72DB	ETS71NDB		
VEL SATIS 2.0 dCi	(BJ0_)	08/05→			MAG82D	ETS80ND		
VEL SATIS 2.0 dCi	(BJ0_)	01/06→			MAG82D	ETS80ND		

	Design		START	RUN	MAGIS	ETS	ETS alternative	ES
RENAULT								
VEL SATIS 2.2 dCi (BJOH)	(BJ0_)	04/04→			MAG82D	ETS80ND		
VEL SATIS 2.2 dCi	(BJ0_)	09/04→			MAG82D	ETS80ND		
VEL SATIS 2.2 dCi (BJ0E)	(BJ0_)	06/02→			MAG82D	ETS80ND		
VEL SATIS 3.0 dCi (BJ0J0B)	(BJ0_)	06/02→			MAG82D	ETS80ND		
VEL SATIS 3.0 dCi	(BJ0_)	06/06→			MAG82D	ETS80ND		
19 I 1.4	(B/C53_)	09/90→04/92		RUN50D	MAG50D	ETS50ND	ETS50D3N-ETS50D4N	
19 I Chamade 1.4	(L53_)	09/90→04/92		RUN50D	MAG50D	ETS50ND	ETS50D3N-ETS50D4N	
19 I Chamade 1.9 TD (L53K)	(L53_)	09/90→04/92		RUN72D	MAG74D	ETS74ND	ETS70D1N-ETS74DI	476420ES
19 I Cabriolet 1.7	(D53_)	07/91→04/92		RUN50D	MAG50D	ETS50ND	ETS50D3N-ETS50D4N	
19 I Cabriolet 1.7	(D53_)	07/91→04/92		RUN50D	MAG50D	ETS50ND	ETS50D3N-ETS50D4N	
19 I Cabriolet 1.8 16V (D53D)	(D53_)	07/91→04/92		RUN50D	MAG50D	ETS50ND	ETS50D3N-ETS50D4N	
19 II 1.2	(B/C53_)	05/92→09/94		RUN50D	MAG50D	ETS50ND	ETS50D3N-ETS50D4N	
19 II 1.2	(B/C53_)	04/92→12/95		RUN50D	MAG50D	ETS50ND	ETS50D3N-ETS50D4N	
19 II 1.4 (B/C532)	(B/C53_)	04/92→12/95		RUN50D	MAG50D	ETS50ND	ETS50D3N-ETS50D4N	
19 II 1.4 (B/C535)	(B/C53_)	01/92→12/95		RUN50D	MAG50D	ETS50ND	ETS50D3N-ETS50D4N	
19 II 1.4	(B/C53_)	01/92→12/95		RUN50D	MAG50D	ETS50ND	ETS50D3N-ETS50D4N	
19 II 1.7 (B/C53B)	(B/C53_)	04/92→12/95		RUN50D	MAG50D	ETS50ND	ETS50D3N-ETS50D4N	
19 II 1.7 (B/C53C)	(B/C53_)	04/92→12/95		RUN50D	MAG50D	ETS50ND	ETS50D3N-ETS50D4N	
19 II 1.7	(B/C53_)	05/92→09/94		RUN50D	MAG50D	ETS50ND	ETS50D3N-ETS50D4N	
19 II 1.8 16V (B/C53D)	(B/C53_)	04/92→12/95		RUN50D	MAG50D	ETS50ND	ETS50D3N-ETS50D4N	
19 II 1.8 (B/C53Y)	(B/C53_)	04/92→12/95		RUN50D	MAG50D	ETS50ND	ETS50D3N-ETS50D4N	
19 II 1.8 (5/353A)	(B/C53_)	04/92→12/95		RUN50D	MAG50D	ETS50ND	ETS50D3N-ETS50D4N	
19 II 1.8 (5/353F, B/C538)	(B/C53_)	05/94→12/95		RUN50D	MAG50D	ETS50ND	ETS50D3N-ETS50D4N	
19 II 1.8 (B/C538)	(B/C53_)	04/92→05/94		RUN50D	MAG50D	ETS50ND	ETS50D3N-ETS50D4N	
19 II 1.9 D (B/C53J)	(B/C53_)	04/92→12/95		RUN72D	MAG74D	ETS74ND	ETS70D1N-ETS74DI	476420ES
19 II 1.9 dT (B/C53T)	(B/C53_)	04/92→12/95		RUN72D	MAG74D	ETS74ND	ETS70D1N-ETS74DI	476420ES
19 II Chamade 1.2	(L53_)	05/92→09/94		RUN50D	MAG50D	ETS50ND	ETS50D3N-ETS50D4N	
19 II Chamade 1.4 (L535)	(L53_)	11/93→12/95		RUN50D	MAG50D	ETS50ND	ETS50D3N-ETS50D4N	
19 II Chamade 1.4	(L53_)	10/94→11/95		RUN50D	MAG50D	ETS50ND	ETS50D3N-ETS50D4N	
19 II Chamade 1.4	(L53_)	10/94→11/95		RUN50D	MAG50D	ETS50ND	ETS50D3N-ETS50D4N	
19 II Chamade 1.4 (532)	(L53_)	04/92→12/95		RUN50D	MAG50D	ETS50ND	ETS50D3N-ETS50D4N	
19 II Chamade 1.4	(L53_)	05/92→09/94		RUN50D	MAG50D	ETS50ND	ETS50D3N-ETS50D4N	
19 II Chamade 1.7 (L53B)	(L53_)	04/92→12/95		RUN50D	MAG50D	ETS50ND	ETS50D3N-ETS50D4N	
19 II Chamade 1.7	(L53_)	05/92→11/95		RUN50D	MAG50D	ETS50ND	ETS50D3N-ETS50D4N	
19 II Chamade 1.7 (L53C)	(L53_)	04/92→12/95		RUN50D	MAG50D	ETS50ND	ETS50D3N-ETS50D4N	
19 II Chamade 1.7 (L533)	(L53_)	01/93→08/95		RUN50D	MAG50D	ETS50ND	ETS50D3N-ETS50D4N	
19 II Chamade 1.8 16V (L53D)	(L53_)	04/92→12/95		RUN50D	MAG50D	ETS50ND	ETS50D3N-ETS50D4N	
19 II Chamade 1.8 (L53V, L538)	(L53_)	05/94→12/95		RUN50D	MAG50D	ETS50ND	ETS50D3N-ETS50D4N	
19 II Chamade 1.8 (L53Y)	(L53_)	04/92→12/95		RUN50D	MAG50D	ETS50ND	ETS50D3N-ETS50D4N	
19 II Chamade 1.8 (453A/F)	(L53_)	04/92→12/95		RUN50D	MAG50D	ETS50ND	ETS50D3N-ETS50D4N	
19 II Chamade 1.8	(L53_)	05/92→09/94		RUN50D	MAG50D	ETS50ND	ETS50D3N-ETS50D4N	
19 II Chamade 1.8	(L53_)	05/92→11/95		RUN50D	MAG50D	ETS50ND	ETS50D3N-ETS50D4N	
19 II Chamade 1.8 (L538)	(L53_)	04/92→05/94		RUN50D	MAG50D	ETS50ND	ETS50D3N-ETS50D4N	
19 II Chamade 1.9 D (L53J)	(L53_)	04/92→12/95		RUN72D	MAG74D	ETS74ND	ETS70D1N-ETS74DI	476420ES
19 II Chamade 1.9 dT (L53T)	(L53_)	04/92→12/95		RUN72D	MAG74D	ETS74ND	ETS70D1N-ETS74DI	476420ES
19 II Chamade 1.9 D	(L53_)	05/92→11/95		RUN72D	MAG74D	ETS74ND	ETS70D1N-ETS74DI	476420ES
19 II Cabriolet 1.7 (D53C)	(D53_, 853_)	04/92→09/93		RUN50D	MAG50D	ETS50ND	ETS50D3N-ETS50D4N	

	Design		START	RUN	MAGIS	ETS	ETS alternative	ES
RENAULT								
19 II Cabriolet 1.8 (D53Y)	(D53_, 853_)	04/92→06/96		RUN50D	MAG50D	ETS50ND	ETS50D3N-ETS50D4N	
19 II Cabriolet 1.8 (853A)	(D53_, 853_)	09/93→06/96		RUN50D	MAG50D	ETS50ND	ETS50D3N-ETS50D4N	
19 II Cabriolet 1.8 (D53V, 853F, D53C)	(D53_, 853_)	07/94→06/96		RUN50D	MAG50D	ETS50ND	ETS50D3N-ETS50D4N	
19 II Cabriolet 1.8 16V (D53D)	(D53_, 853_)	04/92→06/96		RUN50D	MAG50D	ETS50ND	ETS50D3N-ETS50D4N	
19 II Box 1.2	(S53_)	03/92→12/95		RUN50D	MAG50D	ETS50ND	ETS50D3N-ETS50D4N	
19 II Box 1.4	(S53_)	03/92→12/95		RUN50D	MAG50D	ETS50ND	ETS50D3N-ETS50D4N	
19 II Box 1.9 D	(S53_)	03/92→12/95		RUN72D				
19 II Box 1.9 dT	(S53_)	03/92→12/95		RUN72D				
21 2.0 (B48R/Y)	(B48_)	02/90→10/92		RUN50D				
21 2.0 4x4 (B48R/Y)	(B48_)	09/90→10/92		RUN50D				
21 2.0	(B48_)	06/91→05/93		RUN50D	MAG50D	ETS50ND	ETS50D3N-ETS50D4N	
21 2.2 4x4 (B48K)	(B48_)	07/90→06/94		RUN62D				
21 2.1 D (B480)	(B48_)	04/92→06/94		RUN72D	MAG74D	ETS74ND	ETS70D1N-ETS74DI	476420ES
21 Saloon 2.0	(L48_)	05/91→10/93		RUN50D				
21 Saloon 2.0 (L48R)	(L48_)	02/90→06/94		RUN50D	MAG50D	ETS50ND	ETS50D3N-ETS50D4N	
21 Saloon 2.0 Turbo (L48L)	(L48_)	02/90→10/92		RUN50D	MAG50D	ETS50ND	ETS50D3N-ETS50D4N	
21 Saloon 2.0 Turbo 4x4 (L48L)	(L48_)	02/90→10/92		RUN50D	MAG50D	ETS50ND	ETS50D3N-ETS50D4N	
21 Saloon 2.2 4x4 (L48K)	(L48_)	07/90→02/94		RUN62D	MAG62D	ETS62ND	ETS60D3N	438320ES
21 Saloon 2.1 D (L480)	(L48_)	10/92→06/94		RUN72D	MAG74D	ETS74ND	ETS70D1N-ETS74DI	476420ES
21 Estate 2.0	(K48_)	06/91→05/93		RUN62D	MAG62D	ETS62ND	ETS60D3N	438320ES
21 Estate 2.0 (K48R)	(K48_)	06/90→02/94		RUN62D	MAG62D	ETS62ND	ETS60D3N	438320ES
21 Estate 2.1 D (K480)	(K48_)	02/92→09/95		RUN72D	MAG74D	ETS74ND	ETS70D1N-ETS74DI	476420ES
25 2.5 V6 Turbo (B29G)	(B29_)	01/90→12/92		RUN62D	MAG62D	ETS62ND	ETS60D3N	438320ES
TRAFIC Bus 1.7	(TXW)	08/92→08/94		RUN72D				
TRAFIC Bus 2.2	(TXW)	06/94→10/97		RUN72D				
TRAFIC Bus 2.2 4x4	(TXW)	06/94→10/97		RUN72D				
TRAFIC Bus 1.9 D	(TXW)	06/97→03/01		RUN72D				
TRAFIC Bus 2.1 D	(TXW)	06/94→10/97		RUN72D	MAG74D	ETS74ND	ETS70D1N-ETS74DI	476420ES
TRAFIC Bus 2.5 D	(TXW)	09/94→04/98		RUN72D	MAG74D	ETS74ND	ETS70D1N-ETS74DI	476420ES
TRAFIC Box 1.7	(TXX)	08/92→08/94		RUN50D	MAG50D-MAG45D	ETS50ND-ETS45ND	ETS50D3N-ETS50D4N	436210ES
TRAFIC Box 2.2	(TXX)	06/94→10/97		RUN72D				
TRAFIC Box 2.2 4x4	(TXX)	06/94→10/97		RUN72D				
TRAFIC Box 1.9 D	(TXX)	06/97→03/01		RUN72D	MAG74D	ETS74ND	ETS70D1N-ETS74DI	476420ES
TRAFIC Box 2.1 D	(TXX)	06/94→10/97		RUN72D	MAG74D	ETS74ND	ETS70D1N-ETS74DI	476420ES
TRAFIC Flatbed / Chassis 2.2	(PXX)	09/94→04/98		RUN62D				
TRAFIC Flatbed / Chassis 2.2 4x4	(PXX)	09/94→04/98		RUN62D				
TRAFIC Flatbed / Chassis 2.1 D [RWD]	(PXX)	06/94→10/97		RUN72D				
TRAFIC Flatbed / Chassis 2.1 D	(PXX)	09/94→04/98		RUN72D	MAG74D	ETS74ND	ETS70D1N-ETS74DI	476420ES
TRAFIC Flatbed / Chassis 2.5 D	(PXX)	05/98→03/01		RUN72D	MAG74D	ETS74ND	ETS70D1N-ETS74DI	476420ES
TRAFIC Flatbed / Chassis 2.5 D	(PXX)	09/94→04/98		RUN72D	MAG74D	ETS74ND	ETS70D1N-ETS74DI	476420ES
TRAFIC Flatbed / Chassis 2.5 D 4x4	(PXX)	09/94→01/99		RUN72D	MAG74D	ETS74ND	ETS70D1N-ETS74DI	476420ES
TRAFIC II Bus 2.0 16V	(JL)	08/06→			MAG72DB	ETS71NDB		
TRAFIC II Bus 2.0 (JL0A)	(JL)	03/01→		RUN72D	MAG74D	ETS74ND	ETS70D1N-ETS74DI	476420ES
TRAFIC II Bus 1.9 dCi	(JL)	04/01→07/03		RUN72D	MAG74D	ETS74ND	ETS70D1N-ETS74DI	476420ES
TRAFIC II Bus 1.9 dCI 80	(JL)	03/01→		RUN72D				
TRAFIC II Bus 1.9 dCI 100	(JL)	03/01→		RUN72D				
TRAFIC II Bus 2.5 dCi 135 (JL0D)	(JL)	05/03→		RUN72D	MAG74D	ETS74ND	ETS70D1N-ETS74DI	476420ES

	Design		START	RUN	MAGIS	ETS	ETS alternative	ES
RENAULT								
TRAFIC II Box 2.0 16V	(FL)	08/06→			MAG72DB	ETS71NDB		
TRAFIC II Box 2.0 (FL0A)	(FL)	03/01→		RUN72D	MAG74D	ETS74ND	ETS70D1N-ETS74DI	476420ES
TRAFIC II Box 1.9 dCi	(FL)	04/01→07/03		RUN72D	MAG74D	ETS74ND	ETS70D1N-ETS74DI	476420ES
TRAFIC II Box 1.9 dCi 80	(FL)	03/01→		RUN72D				
TRAFIC II Box 1.9 dCi 100	(FL)	03/01→		RUN72D				
TRAFIC II Box 2.5 dCi 135 (FL0D)	(FL)	05/03→		RUN72D	MAG74D	ETS74ND	ETS70D1N-ETS74DI	476420ES
TRAFIC II Box 2.5 dCi 145	(FL)	08/06→		RUN95D		ETS92ND-ETS95D1N		434440ES
TRAFIC II Flatbed / Chassis 1.9 dCi	(EL)	09/01→07/03		RUN72D	MAG74D	ETS74ND	ETS70D1N-ETS74DI	476420ES
TRAFIC II Flatbed / Chassis 2.0 (ELOA)	(EL)	03/01→		RUN72D	MAG74D	ETS74ND	ETS70D1N-ETS74DI	476420ES
TRAFIC II Flatbed / Chassis 1.9 dCi 80 (ELOB)	(EL)	03/01→		RUN72D	MAG74D	ETS74ND	ETS70D1N-ETS74DI	476420ES
TRAFIC II Flatbed / Chassis 1.9 dCi 100 (ELOC)	(EL)	03/01→		RUN72D	MAG74D	ETS74ND	ETS70D1N-ETS74DI	476420ES
TRAFIC II Flatbed / Chassis 2.5 dCi 135 (ELOD)	(EL)	03/01→		RUN72D	MAG74D	ETS74ND	ETS70D1N-ETS74DI	476420ES
TRAFIC II Flatbed / Chassis 2.5 dCi 145	(EL)	08/06→	AGM80D	RUN95D		ETS92ND-ETS95D1N		434440ES
MASTER I Flatbed / Chassis 2.2	(P__)	08/93→02/98		RUN62D				
MASTER I Flatbed / Chassis 2.4 D	(P__)	08/93→02/98		RUN72D	MAG74D	ETS74ND	ETS70D1N-ETS74DI	476420ES
MASTER I Flatbed / Chassis 2.5 DT	(P__)	08/93→02/98		RUN95D		ETS92ND-ETS95D1N		434440ES
MASTER II Bus 1.9 dTI	(JD/ND)	09/00→		RUN95D		ETS92ND-ETS95D1N		434440ES
MASTER II Bus 1.9 dCi 80	(JD/ND)	11/01→		RUN95D		ETS92ND-ETS95D1N		434440ES
MASTER II Bus 2.2 dCI 90	(JD/ND)	09/00→		RUN95D		ETS92ND-ETS95D1N		434440ES
MASTER II Bus 2.5 dCi 120	(JD/ND)	10/01→		RUN95D		ETS92ND-ETS95D1N		434440ES
MASTER II Bus 2.5 D	(JD/ND)	07/98→01/01		RUN95D		ETS92ND-ETS95D1N		434440ES
MASTER II Bus 2.8 dTI	(JD/ND)	07/98→10/01		RUN95D		ETS92ND-ETS95D1N		434440ES
MASTER II Box 1.9 dTI	(FD)	09/00→		RUN95D		ETS92ND-ETS95D1N		434440ES
MASTER II Box 1.9 dCi 80	(FD)	11/01→		RUN95D		ETS92ND-ETS95D1N		434440ES
MASTER II Box 2.2 dCI 90	(FD)	09/00→		RUN95D		ETS92ND-ETS95D1N		434440ES
MASTER II Box 2.5 dCi 120	(FD)	10/01→		RUN95D		ETS92ND-ETS95D1N		434440ES
MASTER II Box 2.5 D	(FD)	07/98→01/01		RUN95D		ETS92ND-ETS95D1N		434440ES
MASTER II Box 2.8 dTI	(FD)	07/98→10/01		RUN95D		ETS92ND-ETS95D1N		434440ES
MASTER II Flatbed / Chassis 2.2 dCI 90	(ED/HD/UD)	09/00→		RUN95D		ETS92ND-ETS95D1N		434440ES
MASTER II Flatbed / Chassis 2.5 dCi 120	(ED/HD/UD)	10/01→		RUN95D		ETS92ND-ETS95D1N		434440ES
MASTER II Flatbed / Chassis 2.5 D	(ED/HD/UD)	07/98→01/01		RUN95D		ETS92ND-ETS95D1N		434440ES
MASTER II Flatbed / Chassis 2.8 dTI	(ED/HD/UD)	07/98→10/01		RUN95D		ETS92ND-ETS95D1N		434440ES
MASTER III Bus 2.5 dCi 100 (JDCV)	(JD)	10/03→		RUN95D		ETS92ND-ETS95D1N		434440ES
MASTER III Bus 2.5 dCi	(JD)	08/06→		RUN95D		ETS92ND-ETS95D1N		434440ES
MASTER III Bus 2.5 dCi	(JD)	01/04→		RUN95D		ETS92ND-ETS95D1N		434440ES
MASTER III Bus 2.5 dCi	(JD)	08/06→		RUN95D		ETS92ND-ETS95D1N		434440ES
MASTER III Bus 2.5 dCi	(JD)	08/06→		RUN95D		ETS92ND-ETS95D1N		434440ES
MASTER III Bus 3.0 dCi 140 (JD0T)	(JD)	10/03→		RUN95D		ETS92ND-ETS95D1N		434440ES
MASTER III Box 2.5 dCi 100 (HD0U, FD0U, HD0V, FD0V)	(HD, FD)	10/03→		RUN95D		ETS92ND-ETS95D1N		434440ES
MASTER III Box 2.5 dCi	(HD, FD)	08/06→		RUN95D		ETS92ND-ETS95D1N		434440ES
MASTER III Box 2.5 dCi	(HD, FD)	01/04→		RUN95D		ETS92ND-ETS95D1N		434440ES
MASTER III Box 2.5 dCi	(HD, FD)	08/06→		RUN95D		ETS92ND-ETS95D1N		434440ES

	Design		START	RUN	MAGIS	ETS	ETS alternative	ES
RENAULT								
MASTER III Box 2.5 dCi	(HD, FD)	08/06→		RUN95D		ETS92ND-ETS95D1N		434440ES
MASTER III Box 3.0 dCi 120	(HD, FD)	06/05→		RUN95D		ETS92ND-ETS95D1N		434440ES
MASTER III Box 3.0 dCi 140 (HD0S, FD0S, HD1S)	(HD, FD)	10/03→		RUN95D		ETS92ND-ETS95D1N		434440ES
MASTER III Box 3.0 dCi 160	(HD, FD)	06/05→		RUN95D		ETS92ND-ETS95D1N		434440ES
MASTER III Flatbed / Chassis 2.5 dCi 100 (ED4V, ED8V)	(ED, UD)	10/03→		RUN95D		ETS92ND-ETS95D1N		434440ES
MASTER III Flatbed / Chassis 2.5 dCi	(ED, UD)	08/06→		RUN95D		ETS92ND-ETS95D1N		434440ES
MASTER III Flatbed / Chassis 2.5 dCi	(ED, UD)	01/04→		RUN95D		ETS92ND-ETS95D1N		434440ES
MASTER III Flatbed / Chassis 2.5 dCi	(ED, UD)	08/06→		RUN95D		ETS92ND-ETS95D1N		434440ES
MASTER III Flatbed / Chassis 2.5 dCi	(ED, UD)	08/06→		RUN95D		ETS92ND-ETS95D1N		434440ES
MASTER III Flatbed / Chassis 3.0 dCi 120	(ED, UD)	06/05→		RUN95D		ETS92ND-ETS95D1N		434440ES
MASTER III Flatbed / Chassis 3.0 dCi 140 (ED0S, UD0S)	(ED, UD)	10/03→		RUN95D		ETS92ND-ETS95D1N		434440ES
MASTER III Flatbed / Chassis 3.0 dCi 160	(ED, UD)	06/05→		RUN95D		ETS92ND-ETS95D1N		434440ES
MASTER IV Box 2.3 dCi FWD (JV0A, JV0B)	(FV, JV)	02/10→		RUN95D		ETS92ND-ETS95D1N		434440ES
MASTER IV Box 2.3 dCi FWD (JV0A, JV0B)	(FV, JV)	02/10→		RUN95D		ETS92ND-ETS95D1N		434440ES
MASTER IV Box 2.3 dCi (FV0A, FV0B)	(FV, JV)	02/10→		RUN95D		ETS92ND-ETS95D1N		434440ES
MASTER IV Box 2.3 dCi (FV0F)	(FV, JV)	02/10→		RUN95D		ETS92ND-ETS95D1N		434440ES
ROLLS ROYCE								
ROLLS CORNICHE Convertible 6.8 V8 Turbo		01/00→						ES70540S
ROLLS PHANTOM 6.75		05/03→		RUN95D		ETS92ND-ETS95D1N		434440ES
ROLLS SILVER SERAPH 5.4		03/98→						ES70540S
ROVER								
ROVER 25 1.1 16V	(RF)	01/04→			MAG44DB	ETS44NDB		ES45NDB
ROVER 25 1.1	(RF)	07/01→05/04			MAG44DB	ETS44NDB		ES45NDB
ROVER 25 1.4 16V	(RF)	10/99→		RUN50D	MAG50D	ETS50ND	ETS50D3N-ETS50D4N	
ROVER 25 1.1	(RF)	09/99→06/01			MAG44DB	ETS44NDB		ES45NDB
ROVER 25 1.4 16V	(RF)	10/99→			MAG44DB	ETS44NDB		ES45NDB
ROVER 25 1.6 16V	(RF)	10/99→			MAG44DB	ETS44NDB		ES45NDB
ROVER 25 1.8 16V	(RF)	10/99→		RUN62D				
ROVER 25 1.8 16V	(RF)	02/00→		RUN62D				
ROVER 25 2.0 iDT	(RF)	10/99→		RUN72D	MAG74D	ETS74ND	ETS70D1N-ETS74DI	476420ES
ROVER STREETWISE 1.4		08/03→		RUN62D				
ROVER STREETWISE 1.4		08/03→		RUN62D				
ROVER STREETWISE 2.0 TD		08/03→		RUN72D	MAG74D	ETS74ND	ETS70D1N-ETS74DI	476420ES
ROVER CITYROVER 1.4		01/04→		RUN50D	MAG50D	ETS50ND	ETS50D3N-ETS50D4N	
ROVER 45 1.4	(RT)	02/00→		RUN50D	MAG50D	ETS50ND	ETS50D3N-ETS50D4N	
ROVER 45 1.6	(RT)	02/00→		RUN50D	MAG50D	ETS50ND	ETS50D3N-ETS50D4N	
ROVER 45 1.8	(RT)	02/00→		RUN62D	MAG62D	ETS62ND	ETS60D3N	438320ES
ROVER 45 2.0 V6	(RT)	02/00→		RUN62D	MAG62D	ETS62ND	ETS60D3N	438320ES

	Design		START	RUN	MAGIS	ETS	ETS alternative	ES
ROVER								
ROVER 45 2.0 iDT	(RT)	02/00→		RUN72D	MAG74D	ETS74ND	ETS70D1N-ETS74DI	476420ES
ROVER 45 Saloon 1.4	(RT)	02/00→		RUN50D	MAG50D	ETS50ND	ETS50D3N-ETS50D4N	
ROVER 45 Saloon 1.6	(RT)	02/00→		RUN50D	MAG50D	ETS50ND	ETS50D3N-ETS50D4N	
ROVER 45 Saloon 1.8	(RT)	02/00→		RUN62D	MAG62D	ETS62ND	ETS60D3N	438320ES
ROVER 45 Saloon 2.0 V6	(RT)	02/00→		RUN62D	MAG62D	ETS62ND	ETS60D3N	438320ES
ROVER 45 Saloon 2.0 iDT	(RT)	02/00→		RUN72D	MAG74D	ETS74ND	ETS70D1N-ETS74DI	476420ES
ROVER 75 1.8	(RJ)	02/99→		RUN62D	MAG62D	ETS62ND	ETS60D3N	438320ES
ROVER 75 1.8 Turbo	(RJ)	05/03→		RUN62D	MAG62D	ETS62ND	ETS60D3N	438320ES
ROVER 75 2.0 V6	(RJ)	02/99→		RUN62D	MAG62D	ETS62ND	ETS60D3N	438320ES
ROVER 75 2.5 V6	(RJ)	02/99→10/01		RUN62D	MAG62D	ETS62ND	ETS60D3N	438320ES
ROVER 75 2.5 V6	(RJ)	10/01→		RUN72D				
ROVER 75 2.0 CDT	(RJ)	02/99→		RUN72D				
ROVER 75 2.0 CDTi	(RJ)	02/03→		RUN72D	MAG74D	ETS74ND	ETS70D1N-ETS74DI	476420ES
ROVER 75 Tourer 1.8	(RJ)	08/01→		RUN62D				
ROVER 75 Tourer 1.8 Turbo	(RJ)	05/03→		RUN62D	MAG62D	ETS62ND	ETS60D3N	438320ES
ROVER 75 Tourer 2.0 V6	(RJ)	08/01→		RUN62D				
ROVER 75 Tourer 2.5 V6	(RJ)	08/01→		RUN62D	MAG62D	ETS62ND	ETS60D3N	438320ES
ROVER 75 Tourer 2.0 CDT	(RJ)	08/01→		RUN72D				
ROVER 75 Tourer 2.0 CDTi	(RJ)	02/03→		RUN72D	MAG74D	ETS74ND	ETS70D1N-ETS74DI	476420ES
ROVER 100 111 C/L/S	(METRO)	03/90→12/98		RUN50D	MAG50D	ETS50ND	ETS50D3N-ETS50D4N	
ROVER 100 114 S/L/GTA	(METRO)	03/90→12/98		RUN50D	MAG50D	ETS50ND	ETS50D3N-ETS50D4N	
ROVER 100 114 GTI/GT 16V CAT	(METRO)	03/90→12/98		RUN50D	MAG50D	ETS50ND	ETS50D3N-ETS50D4N	
ROVER 100 114 GTI 16V	(METRO)	03/90→08/91			MAG62DB	ETS60NDB-ETS50NDB		ES60NDB
ROVER 100 114 GTI 16V	(METRO)	08/91→12/98		RUN50D	MAG50D	ETS50ND	ETS50D3N-ETS50D4N	
ROVER 100 114 GSi	(METRO)	10/94→10/95			MAG62DB	ETS60NDB-ETS50NDB		ES60NDB
ROVER 100 Convertible 111	(XP)	04/94→		RUN50D	MAG50D	ETS50ND	ETS50D3N-ETS50D4N	
ROVER 100 Convertible 114	(XP)	04/94→		RUN50D	MAG50D	ETS50ND	ETS50D3N-ETS50D4N	
ROVER 100 Convertible 114	(XP)	03/97→10/98			MAG62DB	ETS60NDB-ETS50NDB		ES60NDB
ROVER 200 Hatchback 214	(XW)	09/93→10/95		RUN50D	MAG50D	ETS50ND	ETS50D3N-ETS50D4N	
ROVER 200 Hatchback 214 GSi/Si	(XW)	01/90→10/95			MAG44DB	ETS44NDB		ES45NDB
ROVER 200 Hatchback 214 GSi/Si	(XW)	12/92→10/95		RUN50D	MAG50D	ETS50ND	ETS50D3N-ETS50D4N	
ROVER 200 Hatchback 216 GTi	(XW)	09/90→10/95		RUN50D	MAG50D	ETS50ND	ETS50D3N-ETS50D4N	
ROVER 200 Hatchback 216 GTi	(XW)	09/90→10/95			MAG62DB	ETS60NDB-ETS50NDB		ES60NDB
ROVER 200 Hatchback 220 GTi	(XW)	01/93→10/95		RUN50D	MAG50D	ETS50ND	ETS50D3N-ETS50D4N	
ROVER 200 Hatchback 220 GTi	(XW)	09/91→10/95		RUN50D	MAG50D	ETS50ND	ETS50D3N-ETS50D4N	
ROVER 200 Hatchback 220 Turbo	(XW)	01/93→10/95		RUN50D	MAG50D	ETS50ND	ETS50D3N-ETS50D4N	
ROVER 200 Hatchback 218 TD	(XW)	09/91→10/95		RUN62D	MAG62D	ETS62ND	ETS60D3N	438320ES
ROVER 200 Hatchback 218 D	(XW)	09/91→10/95			MAG62DB	ETS60NDB-ETS50NDB		ES60NDB
ROVER 200 Coupe 216	(XW)	10/92→06/99		RUN50D	MAG50D	ETS50ND	ETS50D3N-ETS50D4N	
ROVER 200 Coupe 220 GSi	(XW)	05/94→06/99		RUN50D	MAG50D	ETS50ND	ETS50D3N-ETS50D4N	
ROVER 200 Coupe 220 Turbo	(XW)	10/92→06/99		RUN50D	MAG50D	ETS50ND	ETS50D3N-ETS50D4N	
ROVER 200 211	(RF)	01/98→03/00			MAG44DB	ETS44NDB		ES45NDB
ROVER 200 214 i	(RF)	11/95→03/00			MAG44DB	ETS44NDB		ES45NDB
ROVER 200 1.4	(RF)	01/96→12/97			MAG44DB	ETS44NDB		ES45NDB
ROVER 200 214 Si	(RF)	11/95→03/00			MAG44DB	ETS44NDB		ES45NDB
ROVER 200 216 Si	(RF)	11/95→03/00		RUN50D	MAG50D	ETS50ND	ETS50D3N-ETS50D4N	
ROVER 200 218 K Vi	(RF)	11/95→03/00			MAG62DB	ETS60NDB-ETS50NDB		ES60NDB

	Design		START	RUN	MAGIS	ETS	ETS alternative	ES
ROVER								
ROVER 200 220 D/SD	(RF)	11/95→03/00		RUN62D	MAG62D	ETS62ND	ETS60D3N	438320ES
ROVER 200 220 SDi	(RF)	11/95→03/00		RUN62D	MAG62D	ETS62ND	ETS60D3N	438320ES
ROVER 400 414 GSI/SI	(XW)	04/90→04/95		RUN50D	MAG50D	ETS50ND	ETS50D3N-ETS50D4N	
ROVER 400 414	(XW)	01/93→04/95			MAG44DB	ETS44NDB		ES45NDB
ROVER 400 414 GSI/SI CAT	(XW)	01/93→04/95		RUN50D	MAG50D	ETS50ND	ETS50D3N-ETS50D4N	
ROVER 400 416 GSI	(XW)	04/90→04/95		RUN50D	MAG50D	ETS50ND	ETS50D3N-ETS50D4N	
ROVER 400 416 GSI/GSE	(XW)	04/90→04/95			MAG44DB	ETS44NDB		ES45NDB
ROVER 400 416 GTI	(XW)	04/90→04/95		RUN50D	MAG50D	ETS50ND	ETS50D3N-ETS50D4N	
ROVER 400 416 GTI/GTE	(XW)	04/90→04/95			MAG44DB	ETS44NDB		ES45NDB
ROVER 400 420 GSI/SLI/GTI/Vite	(XW)	01/93→04/95		RUN50D	MAG50D	ETS50ND	ETS50D3N-ETS50D4N	
ROVER 400 420 GTI/GSI/Vitesse	(XW)	02/92→04/95		RUN50D	MAG50D	ETS50ND	ETS50D3N-ETS50D4N	
ROVER 400 420 Turbo	(XW)	01/93→04/95		RUN50D	MAG50D	ETS50ND	ETS50D3N-ETS50D4N	
ROVER 400 418 TD	(XW)	09/91→04/95		RUN72D	MAG74D	ETS74ND	ETS70D1N-ETS74DI	476420ES
ROVER 400 418 D	(XW)	09/91→04/95		RUN72D	MAG74D	ETS74ND	ETS70D1N-ETS74DI	476420ES
ROVER 400 Tourer 1.6 i	(XW)	05/94→11/98		RUN50D	MAG50D	ETS50ND	ETS50D3N-ETS50D4N	
ROVER 400 Tourer 1.6 i	(XW)	05/94→11/98		RUN50D	MAG50D	ETS50ND	ETS50D3N-ETS50D4N	
ROVER 400 Tourer 1.8 i	(XW)	06/96→11/98		RUN50D	MAG50D	ETS50ND	ETS50D3N-ETS50D4N	
ROVER 400 Tourer 2.0 i	(XW)	05/94→11/98		RUN50D	MAG50D	ETS50ND	ETS50D3N-ETS50D4N	
ROVER 400 Tourer 1.8 TD	(XW)	09/93→11/98		RUN72D	MAG74D	ETS74ND	ETS70D1N-ETS74DI	476420ES
ROVER 400 Hatchback 414	(RT)	03/96→12/97			MAG44DB	ETS44NDB		ES45NDB
ROVER 400 Hatchback 414 Si	(RT)	05/95→03/00		RUN50D	MAG50D	ETS50ND	ETS50D3N-ETS50D4N	
ROVER 400 Hatchback 416 Si	(RT)	05/95→03/00		RUN50D	MAG50D	ETS50ND	ETS50D3N-ETS50D4N	
ROVER 400 Hatchback 416 Si	(RT)	06/95→03/00		RUN50D	MAG50D	ETS50ND	ETS50D3N-ETS50D4N	
ROVER 400 Hatchback 420 Si Lux	(RT)	12/95→03/00		RUN50D	MAG50D	ETS50ND	ETS50D3N-ETS50D4N	
ROVER 400 Hatchback 420 D	(RT)	11/95→03/00		RUN72D	MAG74D	ETS74ND	ETS70D1N-ETS74DI	476420ES
ROVER 400 Hatchback 420 Di	(RT)	05/95→03/00		RUN72D	MAG74D	ETS74ND	ETS70D1N-ETS74DI	476420ES
ROVER 400 414 Si	(RT)	05/95→03/00		RUN50D	MAG50D	ETS50ND	ETS50D3N-ETS50D4N	
ROVER 400 416 Si	(RT)	05/95→03/00		RUN50D	MAG50D	ETS50ND	ETS50D3N-ETS50D4N	
ROVER 400 416 Si	(RT)	05/95→03/00		RUN50D	MAG50D	ETS50ND	ETS50D3N-ETS50D4N	
ROVER 400 420 Si Lux	(RT)	12/95→03/00		RUN50D	MAG50D	ETS50ND	ETS50D3N-ETS50D4N	
ROVER 400 420 D	(RT)	11/95→03/00		RUN72D	MAG74D	ETS74ND	ETS70D1N-ETS74DI	476420ES
ROVER 400 420 Di	(RT)	05/95→03/00		RUN72D	MAG74D	ETS74ND	ETS70D1N-ETS74DI	476420ES
ROVER 600 618 i/Si	(RH)	03/96→02/99		RUN50D	MAG50D	ETS50ND	ETS50D3N-ETS50D4N	
ROVER 600 620 i	(RH)	08/93→06/96		RUN62D	MAG62D	ETS62ND	ETS60D3N	438320ES
ROVER 600 620 Si	(RH)	08/93→02/99		RUN62D	MAG62D	ETS62ND	ETS60D3N	438320ES
ROVER 600 620 Ti Vitesse	(RH)	07/94→02/99		RUN62D	MAG62D	ETS62ND	ETS60D3N	438320ES
ROVER 600 623 Si	(RH)	08/93→02/99		RUN62D	MAG62D	ETS62ND	ETS60D3N	438320ES
ROVER 600 620 Sdi	(RH)	12/94→02/99		RUN72D	MAG74D	ETS74ND	ETS70D1N-ETS74DI	476420ES
ROVER 800 Hatchback 820 I/SI (XS)	(XS)	01/93→02/99		RUN62D	MAG62D	ETS62ND	ETS60D3N	438320ES
ROVER 800 Hatchback 820 16V Turbo (RS)	(XS)	01/92→02/99		RUN62D	MAG62D	ETS62ND	ETS60D3N	438320ES
ROVER 800 Hatchback 820 Sport	(XS)	04/94→03/96		RUN62D				
ROVER 800 Hatchback 827 24V I/SI (RS) CAT	(XS)	01/92→02/99		RUN62D	MAG62D	ETS62ND	ETS60D3N	438320ES
ROVER 800 Hatchback 825 D/SD (XS)	(XS)	01/92→02/99		RUN72D	MAG74D	ETS74ND	ETS70D1N-ETS74DI	476420ES
ROVER 800 820 I/SI (RS)	(XS)	01/92→02/99		RUN62D	MAG62D	ETS62ND	ETS60D3N	438320ES
ROVER 800 820 16V Turbo (RS)	(XS)	01/92→02/99		RUN62D	MAG62D	ETS62ND	ETS60D3N	438320ES

	Design		START	RUN	MAGIS	ETS	ETS alternative	ES
ROVER								
ROVER 800 820 Sport	(XS)	04/94→03/96		RUN62D	MAG62D	ETS62ND	ETS60D3N	438320ES
ROVER 800 825 Si Lux (RS)	(XS)	04/96→02/99		RUN62D	MAG62D	ETS62ND	ETS60D3N	438320ES
ROVER 800 825 D/SD (XS)	(XS)	01/90→02/99		RUN72D	MAG74D	ETS74ND	ETS70D1N-ETS74DI	476420ES
ROVER 800 Coupe 825 Si (RS)		04/96→02/99		RUN62D	MAG62D	ETS62ND	ETS60D3N	438320ES
ROVER 800 Coupe 827 24V (RS)		08/92→02/99		RUN62D	MAG62D	ETS62ND	ETS60D3N	438320ES
ROVER 800 Coupe 825 SD		09/93→02/99		RUN72D	MAG74D	ETS74ND	ETS70D1N-ETS74DI	476420ES
ROVER CABRIOLET 214 1.4	(XW)	01/92→11/99		RUN50D	MAG50D	ETS50ND	ETS50D3N-ETS50D4N	
ROVER CABRIOLET 214 1.4	(XW)	04/90→09/92			MAG44DB	ETS44NDB		ES45NDB
ROVER CABRIOLET 214 1.4i 16V	(XW)	01/93→11/99		RUN50D	MAG50D	ETS50ND	ETS50D3N-ETS50D4N	
ROVER CABRIOLET 216 1.6i 16V	(XW)	01/96→11/99			MAG44DB	ETS44NDB		ES45NDB
ROVER CABRIOLET 216 1.6i	(XW)	01/92→11/99		RUN50D	MAG50D	ETS50ND	ETS50D3N-ETS50D4N	
ROVER COUPE 1.6 16 V		03/96→11/99		RUN62D	MAG62D	ETS62ND	ETS60D3N	438320ES
ROVER COUPE 1.8 16 V		03/96→11/99		RUN62D				
ROVER MAESTRO 1.3		09/90→01/95			MAG44DB	ETS44NDB		ES45NDB
ROVER MAESTRO 1.3		09/90→01/95			MAG44DB	ETS44NDB		ES45NDB
ROVER MAESTRO 1.6		09/90→01/95			MAG44DB	ETS44NDB		ES45NDB
ROVER MAESTRO 2.0 D		09/90→10/92		RUN72D	MAG74D	ETS74ND	ETS70D1N-ETS74DI	476420ES
ROVER MAESTRO 2.0 TD		09/90→01/95		RUN72D	MAG74D	ETS74ND	ETS70D1N-ETS74DI	476420ES
ROVER MINI MK I 1000		01/92→06/93		RUN50D	MAG50D-MAG45D	ETS50ND-ETS45ND	ETS50D3N-ETS50D4N	436210ES
ROVER MINI MK I 1300		10/92→		RUN50D	MAG50D-MAG45D	ETS50ND-ETS45ND	ETS50D3N-ETS50D4N	436210ES
ROVER MINI MK I 1300		01/92→04/95		RUN50D	MAG50D-MAG45D	ETS50ND-ETS45ND	ETS50D3N-ETS50D4N	436210ES
ROVER MINI MK I 1300		01/91→12/91		RUN50D	MAG50D-MAG45D	ETS50ND-ETS45ND	ETS50D3N-ETS50D4N	436210ES
ROVER MINI MK I 1300		01/92→		RUN50D	MAG50D-MAG45D	ETS50ND-ETS45ND	ETS50D3N-ETS50D4N	436210ES
ROVER MINI MK I 1.3 Cooper S		11/96→05/01		RUN50D	MAG50D-MAG45D	ETS50ND-ETS45ND	ETS50D3N-ETS50D4N	436210ES
ROVER MINI MK I Convertible 1300	(XN)	09/92→04/95		RUN50D	MAG50D-MAG45D	ETS50ND-ETS45ND	ETS50D3N-ETS50D4N	436210ES
ROVER MONTEGO 1.6		10/90→09/92			MAG62DB	ETS60NDB-ETS50NDB		ES60NDB
ROVER MONTEGO 2.0 i CAT		12/90→10/94			MAG62DB	ETS60NDB-ETS50NDB		ES60NDB
ROVER MONTEGO Estate 2.0 GTI/LXI	(XE)	12/90→12/93			MAG62DB	ETS60NDB-ETS50NDB		ES60NDB
ROVER MONTEGO Estate 2.0 Turbo-D	(XE)	01/93→12/93			MAG72DB	ETS71NDB		
SAAB								
9-3 2.0 i	(YS3D)	02/98→09/02		RUN62D				
9-3 2.0 Turbo	(YS3D)	01/01→09/02		RUN62D				
9-3 2.0 Turbo	(YS3D)	10/98→09/02		RUN62D				
9-3 2.0 Turbo	(YS3D)	02/98→09/02		RUN62D				
9-3 2.0 SE Turbo	(YS3D)	02/98→09/02		RUN62D				
9-3 2.0 Turbo	(YS3D)	10/99→09/02		RUN62D				
9-3 2.3 i	(YS3D)	02/98→09/02		RUN62D				
9-3 2.3 Turbo	(YS3D)	10/98→09/02		RUN62D				
9-3 2.2 TiD	(YS3D)	02/98→11/00		RUN95D		ETS92ND-ETS95D1N		434440ES
9-3 2.2 TiD	(YS3D)	11/00→09/02		RUN95D		ETS92ND-ETS95D1N		434440ES
9-3 Cabriolet 2.0 i	(YS3D)	02/98→08/03		RUN62D				
9-3 Cabriolet 2.0 Turbo	(YS3D)	01/01→08/03		RUN62D				
9-3 Cabriolet 2.0 Turbo	(YS3D)	10/98→08/03		RUN62D				
9-3 Cabriolet 2.0 Turbo	(YS3D)	02/98→08/03		RUN62D				
9-3 Cabriolet 2.0 Turbo	(YS3D)	10/99→08/03		RUN62D				
9-3 Cabriolet 2.0 SE Turbo	(YS3D)	02/98→08/03		RUN62D				

	Design		START	RUN	MAGIS	ETS	ETS alternative	ES
SAAB								
9-3 Cabriolet 2.3 i	(YS3D)	02/98→08/03		RUN62D				
9-3 Cabriolet 2.3 Turbo	(YS3D)	10/99→08/03		RUN62D				
9-3 1.8 i	(YS3F)	01/04→		RUN72D	MAG74D	ETS74ND	ETS70D1N-ETS74DI	476420ES
9-3 1,8t	(YS3F)	09/02→		RUN72D	MAG74D	ETS74ND	ETS70D1N-ETS74DI	476420ES
9-3 1,8t BioPower	(YS3F)	01/07→		RUN72D	MAG74D	ETS74ND	ETS70D1N-ETS74DI	476420ES
9-3 1,8t BioPower	(YS3F)	05/09→		RUN72D	MAG74D	ETS74ND	ETS70D1N-ETS74DI	476420ES
9-3 2.0 t	(YS3F)	09/02→		RUN72D	MAG74D	ETS74ND	ETS70D1N-ETS74DI	476420ES
9-3 2.0 t BioPower	(YS3F)	01/07→		RUN72D	MAG74D	ETS74ND	ETS70D1N-ETS74DI	476420ES
9-3 2.0 t BioPower	(YS3F)	06/07→		RUN72D	MAG74D	ETS74ND	ETS70D1N-ETS74DI	476420ES
9-3 2.0 t BioPower	(YS3F)	05/09→		RUN72D	MAG74D	ETS74ND	ETS70D1N-ETS74DI	476420ES
9-3 2.0 T	(YS3F)	09/02→		RUN72D				
9-3 2.0 T BioPower	(YS3F)	09/02→		RUN72D	MAG74D	ETS74ND	ETS70D1N-ETS74DI	476420ES
9-3 2.0 Turbo XWD	(YS3F)	09/02→		RUN72D	MAG74D	ETS74ND	ETS70D1N-ETS74DI	476420ES
9-3 2.0 T	(YS3F)	05/09→		RUN72D	MAG74D	ETS74ND	ETS70D1N-ETS74DI	476420ES
9-3 2.0 Turbo Performance	(YS3F)	04/04→		RUN72D	MAG74D	ETS74ND	ETS70D1N-ETS74DI	476420ES
9-3 2.8 Turbo V6	(YS3F)	03/05→		RUN72D	MAG74D	ETS74ND	ETS70D1N-ETS74DI	476420ES
9-3 2.8 Turbo V6	(YS3F)	12/07→		RUN72D	MAG74D	ETS74ND	ETS70D1N-ETS74DI	476420ES
9-3 2.8 Turbo V6	(YS3F)	04/08→		RUN72D	MAG74D	ETS74ND	ETS70D1N-ETS74DI	476420ES
9-3 2.8 Turbo V6 XWD	(YS3F)	05/08→		RUN72D	MAG74D	ETS74ND	ETS70D1N-ETS74DI	476420ES
9-3 1.9 TiD	(YS3F)	09/04→		RUN72D	MAG74D	ETS74ND	ETS70D1N-ETS74DI	476420ES
9-3 1.9 TiD	(YS3F)	09/04→		RUN72D	MAG74D	ETS74ND	ETS70D1N-ETS74DI	476420ES
9-3 2.2 TiD	(YS3F)	09/02→		RUN95D		ETS92ND-ETS95D1N		434440ES
9-3 Convertible 1,8t	(YS3F)	08/03→		RUN72D	MAG74D	ETS74ND	ETS70D1N-ETS74DI	476420ES
9-3 Convertible 1,8t BioPower	(YS3F)	01/07→		RUN72D	MAG74D	ETS74ND	ETS70D1N-ETS74DI	476420ES
9-3 Convertible 1,8t BioPower	(YS3F)	01/07→		RUN72D	MAG74D	ETS74ND	ETS70D1N-ETS74DI	476420ES
9-3 Convertible 2.0 t	(YS3F)	08/03→		RUN72D	MAG74D	ETS74ND	ETS70D1N-ETS74DI	476420ES
9-3 Convertible 2.0 t BioPower	(YS3F)	01/07→		RUN72D	MAG74D	ETS74ND	ETS70D1N-ETS74DI	476420ES
9-3 Convertible 2.0	(YS3F)	04/06→09/07		RUN72D	MAG74D	ETS74ND	ETS70D1N-ETS74DI	476420ES
9-3 Convertible 2.0 t BioPower	(YS3F)	06/07→		RUN72D	MAG74D	ETS74ND	ETS70D1N-ETS74DI	476420ES
9-3 Convertible 2.0 t BioPower	(YS3F)	06/07→		RUN72D	MAG74D	ETS74ND	ETS70D1N-ETS74DI	476420ES
9-3 Convertible 2.0 T	(YS3F)	08/03→		RUN72D	MAG74D	ETS74ND	ETS70D1N-ETS74DI	476420ES
9-3 Convertible 2.0 Turbo Performance	(YS3F)	04/04→		RUN72D	MAG74D	ETS74ND	ETS70D1N-ETS74DI	476420ES
9-3 Convertible 2.8 Turbo V6	(YS3F)	02/06→		RUN72D	MAG74D	ETS74ND	ETS70D1N-ETS74DI	476420ES
9-3 Convertible 2.8 Turbo V6	(YS3F)	12/07→		RUN72D	MAG74D	ETS74ND	ETS70D1N-ETS74DI	476420ES
9-3 Convertible 2.8 Turbo V6	(YS3F)	02/09→		RUN72D	MAG74D	ETS74ND	ETS70D1N-ETS74DI	476420ES
9-3 Convertible 2.8 Turbo V6	(YS3F)	02/09→		RUN72D	MAG74D	ETS74ND	ETS70D1N-ETS74DI	476420ES
9-3 Convertible 1.9 TiD	(YS3F)	01/06→		RUN72D	MAG74D	ETS74ND	ETS70D1N-ETS74DI	476420ES
9-3 Estate 1.8 i		03/05→		RUN72D	MAG74D	ETS74ND	ETS70D1N-ETS74DI	476420ES
9-3 Estate 1.8 t		03/05→		RUN72D	MAG74D	ETS74ND	ETS70D1N-ETS74DI	476420ES
9-3 Estate 2.0 t		03/05→		RUN72D	MAG74D	ETS74ND	ETS70D1N-ETS74DI	476420ES
9-3 Estate 1.8 t BioPower		01/07→		RUN72D	MAG74D	ETS74ND	ETS70D1N-ETS74DI	476420ES
9-3 Estate 2.0 t		03/05→		RUN72D	MAG74D	ETS74ND	ETS70D1N-ETS74DI	476420ES
9-3 Estate 2.0 t BioPower		01/07→		RUN72D	MAG74D	ETS74ND	ETS70D1N-ETS74DI	476420ES
9-3 Estate 2.0		04/06→09/07		RUN72D	MAG74D	ETS74ND	ETS70D1N-ETS74DI	476420ES
9-3 Estate 2.0 t BioPower		06/07→		RUN72D	MAG74D	ETS74ND	ETS70D1N-ETS74DI	476420ES
9-3 Estate 2.0 T		02/09→		RUN72D	MAG74D	ETS74ND	ETS70D1N-ETS74DI	476420ES
9-3 Estate 2.0 T		03/05→		RUN72D	MAG74D	ETS74ND	ETS70D1N-ETS74DI	476420ES

	Design		START	RUN	MAGIS	ETS	ETS alternative	ES
SAAB								
9-3 Estate 2.0 T XWD		06/08→		RUN72D	MAG74D	ETS74ND	ETS70D1N-ETS74DI	476420ES
9-3 Estate 2.8 Turbo V6		03/05→		RUN72D	MAG74D	ETS74ND	ETS70D1N-ETS74DI	476420ES
9-3 Estate 2.8 Turbo V6		12/07→		RUN72D	MAG74D	ETS74ND	ETS70D1N-ETS74DI	476420ES
9-3 Estate 2.8 Turbo V6		05/08→		RUN72D	MAG74D	ETS74ND	ETS70D1N-ETS74DI	476420ES
9-3 Estate 2.8 Turbo V6 XWD		05/08→		RUN72D	MAG74D	ETS74ND	ETS70D1N-ETS74DI	476420ES
9-3 Estate 1.9 TiD		03/05→		RUN72D	MAG74D	ETS74ND	ETS70D1N-ETS74DI	476420ES
9-3 Estate 1.9 TiD		03/05→		RUN72D	MAG74D	ETS74ND	ETS70D1N-ETS74DI	476420ES
9-3X 2.0 T		02/09→		RUN72D	MAG74D	ETS74ND	ETS70D1N-ETS74DI	476420ES
9-3X 2.0 T BioPower		02/09→		RUN72D	MAG74D	ETS74ND	ETS70D1N-ETS74DI	476420ES
9-5 2.0 t	(YS3E)	09/97→		RUN72D	MAG74D	ETS74ND	ETS70D1N-ETS74DI	476420ES
9-5 2.0 t BioPower	(YS3E)	01/05→		RUN62D				
9-5 2.0 T Biopower	(YS3E)	09/05→		RUN62D				
9-5 2.0	(YS3E)	07/00→		RUN62D				
9-5 2.3 t	(YS3E)	09/97→		RUN72D	MAG74D	ETS74ND	ETS70D1N-ETS74DI	476420ES
9-5 2.3 Turbo	(YS3E)	04/08→		RUN72D	MAG74D	ETS74ND	ETS70D1N-ETS74DI	476420ES
9-5 2.3 t	(YS3E)	01/01→		RUN72D				
9-5 2.3 t BioPower	(YS3E)	01/07→		RUN62D	MAG62D	ETS62ND	ETS60D3N	438320ES
9-5 2.3 t BioPower	(YS3E)	11/06→		RUN62D	MAG62D	ETS62ND	ETS60D3N	438320ES
9-5 2.3 Turbo	(YS3E)	07/03→		RUN72D	MAG74D	ETS74ND	ETS70D1N-ETS74DI	476420ES
9-5 2.3 Turbo	(YS3E)	10/99→09/01		RUN72D	MAG74D	ETS74ND	ETS70D1N-ETS74DI	476420ES
9-5 2.3 Turbo	(YS3E)	09/01→		RUN72D				
9-5 2.3 Turbo	(YS3E)	04/08→		RUN72D	MAG74D	ETS74ND	ETS70D1N-ETS74DI	476420ES
9-5 2.3 Turbo	(YS3E)	11/05→		RUN72D	MAG74D	ETS74ND	ETS70D1N-ETS74DI	476420ES
9-5 2.3	(YS3E)	06/03→08/05		RUN72D	MAG74D	ETS74ND	ETS70D1N-ETS74DI	476420ES
9-5 3.0 V6t	(YS3E)	01/98→		RUN72D	MAG74D	ETS74ND	ETS70D1N-ETS74DI	476420ES
9-5 1.9 TiD	(YS3E)	01/06→		RUN72D	MAG74D	ETS74ND	ETS70D1N-ETS74DI	476420ES
9-5 2.2 TiD	(YS3E)	03/02→		RUN72D				
9-5 3.0 TiD	(YS3E)	07/01→		RUN72D				
9-5 Estate 2.0 t	(YS3E)	10/98→		RUN72D	MAG74D	ETS74ND	ETS70D1N-ETS74DI	476420ES
9-5 Estate 2.0 t BioPower	(YS3E)	01/06→		RUN62D				
9-5 Estate 2.0 t	(YS3E)	10/98→		RUN72D	MAG74D	ETS74ND	ETS70D1N-ETS74DI	476420ES
9-5 Estate 2.0	(YS3E)	07/00→07/01		RUN62D				
9-5 Estate 2.3 t	(YS3E)	10/98→		RUN72D	MAG74D	ETS74ND	ETS70D1N-ETS74DI	476420ES
9-5 Estate 2.3 t	(YS3E)	01/01→		RUN72D				
9-5 Estate 2.3 t BioPower	(YS3E)	01/07→		RUN62D				
9-5 Estate 2.3 t BioPower	(YS3E)	11/06→		RUN62D	MAG62D	ETS62ND	ETS60D3N	438320ES
9-5 Estate 2.3 t BioPower	(YS3E)	11/06→		RUN62D	MAG62D	ETS62ND	ETS60D3N	438320ES
9-5 Estate 2.3 Turbo	(YS3E)	07/03→		RUN72D	MAG74D	ETS74ND	ETS70D1N-ETS74DI	476420ES
9-5 Estate 2.3 Turbo	(YS3E)	10/99→09/01		RUN72D	MAG74D	ETS74ND	ETS70D1N-ETS74DI	476420ES
9-5 Estate 2.3 Turbo	(YS3E)	09/01→		RUN72D				
9-5 Estate 2.3 Turbo	(YS3E)	04/08→		RUN72D	MAG74D	ETS74ND	ETS70D1N-ETS74DI	476420ES
9-5 Estate 2.3 Turbo	(YS3E)	01/06→		RUN72D	MAG74D	ETS74ND	ETS70D1N-ETS74DI	476420ES
9-5 Estate 3.0 V6t	(YS3E)	10/98→		RUN72D	MAG74D	ETS74ND	ETS70D1N-ETS74DI	476420ES
9-5 Estate 2.2 TiD	(YS3E)	03/02→		RUN72D				
9-5 Estate 3.0 TiD	(YS3E)	07/01→		RUN72D				
9-5 1.6 T		05/10→		RUN72D				
9-5 2.0 T		05/10→		RUN72D				

	Design		START	RUN	MAGIS	ETS	ETS alternative	ES
SAAB								
9-5 2.0 T XWD		05/10→		RUN72D				
9-5 2.0 T BioPower		05/10→		RUN72D				
9-5 2.0 T BioPower XWD		05/10→		RUN72D				
9-5 2.8 T V6 XWD		05/10→		RUN72D				
9-5 2.0 TiD		05/10→		RUN72D				
9-7X 4.2		12/05→		RUN72D	MAG74D	ETS74ND	ETS70D1N-ETS74DI	476420ES
900 I Combi Coupe 2.0 S Turbo-16		09/91→07/93		RUN62D	MAG62D	ETS62ND	ETS60D3N	438320ES
900 I Combi Coupe 2.0 -16		05/91→10/93		RUN62D	MAG62D	ETS62ND	ETS60D3N	438320ES
900 I Combi Coupe 2.0 Turbo-16		01/93→06/94		RUN62D	MAG62D	ETS62ND	ETS60D3N	438320ES
900 I Combi Coupe 2.1 -16		09/90→07/93		RUN62D	MAG62D	ETS62ND	ETS60D3N	438320ES
900 I 2.0 S Turbo-16	(AC4, AM4)	07/91→12/93		RUN62D	MAG62D	ETS62ND	ETS60D3N	438320ES
900 I 2.0 S Turbo-16	(AC4, AM4)	01/92→12/93		RUN62D	MAG62D	ETS62ND	ETS60D3N	438320ES
900 I 2.1 -16	(AC4, AM4)	08/90→12/93		RUN62D	MAG62D	ETS62ND	ETS60D3N	438320ES
900 I Convertible 2.0 -16		01/90→06/94		RUN62D	MAG62D	ETS62ND	ETS60D3N	438320ES
900 I Convertible 2.0 16v		04/90→12/90		RUN62D	MAG62D	ETS62ND	ETS60D3N	438320ES
900 I Convertible 2.0 S Turbo-16		09/91→06/94		RUN62D	MAG62D	ETS62ND	ETS60D3N	438320ES
900 I Convertible 2.0		05/91→10/93		RUN62D	MAG62D	ETS62ND	ETS60D3N	438320ES
900 I Convertible 2.1 -16		08/90→06/94		RUN62D	MAG62D	ETS62ND	ETS60D3N	438320ES
900 II 2.0 i		08/94→02/98		RUN62D				
900 II 2.0 i		07/93→07/94		RUN62D				
900 II 2.0 -16 Turbo		07/93→02/98		RUN62D				
900 II 2.3 -16		07/93→02/98		RUN62D				
900 II 2.5 -24 V6		07/93→02/98		RUN62D				
900 II Coupe 2.0 i		08/94→02/98		RUN62D				
900 II Coupe 2.0 i		12/93→07/94		RUN62D				
900 II Coupe 2.0 -16 Turbo		12/93→02/98		RUN62D				
900 II Coupe 2.3 -16		12/93→02/98		RUN62D				
900 II Coupe 2.5 -24 V6		12/93→02/98		RUN72D	MAG74D	ETS74ND	ETS70D1N-ETS74DI	476420ES
900 II Convertible 2.0 i		12/93→02/98		RUN62D				
900 II Convertible 2.0 -16 Turbo		12/93→02/98		RUN62D				
900 II Convertible 2.3 -16		12/93→02/98		RUN62D				
900 II Convertible 2.5 -24 V6		12/93→02/98		RUN62D				
9000 Hatchback 2.0 -16 CS		09/93→12/98		RUN62D	MAG62D	ETS62ND	ETS60D3N	438320ES
9000 Hatchback 2.0 -16 ND Turbo		09/93→12/98		RUN62D	MAG62D	ETS62ND	ETS60D3N	438320ES
9000 Hatchback 2.3 -16 CSE		09/93→12/98		RUN72D	MAG74D	ETS74ND	ETS70D1N-ETS74DI	476420ES
9000 Hatchback 2.3 -16 CSE Eco Power		09/93→12/98		RUN72D	MAG74D	ETS74ND	ETS70D1N-ETS74DI	476420ES
9000 Hatchback 2.3 -16 Turbo		09/90→12/98		RUN62D				
9000 Hatchback 2.3 -16 Turbo CSE		09/93→12/98		RUN72D	MAG74D	ETS74ND	ETS70D1N-ETS74DI	476420ES
9000 Hatchback 2.3 -16 Aero CS		02/93→12/98		RUN72D	MAG74D	ETS74ND	ETS70D1N-ETS74DI	476420ES
9000 Hatchback 2.3 -16 Aero CS		02/93→12/98		RUN72D	MAG74D	ETS74ND	ETS70D1N-ETS74DI	476420ES
9000 Hatchback 3.0 -24 V6 CS/CSE		07/94→12/98		RUN72D	MAG74D	ETS74ND	ETS70D1N-ETS74DI	476420ES
9000 2.0 -16 CD		09/93→12/98		RUN72D	MAG74D	ETS74ND	ETS70D1N-ETS74DI	476420ES
9000 2.0 -16 Turbo CD		09/92→12/98		RUN62D				
9000 2.0 -16 CD		09/93→12/98		RUN72D	MAG74D	ETS74ND	ETS70D1N-ETS74DI	476420ES
9000 2.3 -16 CDE		09/93→12/98		RUN72D	MAG74D	ETS74ND	ETS70D1N-ETS74DI	476420ES
9000 2.3 -16 CDE Eco-Power		09/93→12/98		RUN72D	MAG74D	ETS74ND	ETS70D1N-ETS74DI	476420ES
9000 2.3 -16 Turbo		09/90→08/93		RUN62D				

	Design		START	RUN	MAGIS	ETS	ETS alternative	ES
SAAB								
9000 2.3 -16 CD Turbo		07/90→12/98		RUN62D				
9000 2.3		09/90→10/98		RUN62D	MAG62D	ETS62ND	ETS60D3N	438320ES
9000 3.0 -24 V6 CD/CDE		07/94→12/98		RUN62D	MAG62D	ETS62ND	ETS60D3N	438320ES
SANTANA								
300/350 1.6 D		09/98→		RUN72D	MAG74D	ETS74ND	ETS70D1N-ETS74DI	476420ES
PS10/ANIBAL 2.8 D		03/03→		RUN72D	MAG74D	ETS74ND	ETS70D1N-ETS74DI	476420ES
PS10/ANIBAL 2.8 D 4x4		03/03→		RUN72D	MAG74D	ETS74ND	ETS70D1N-ETS74DI	476420ES
PS10/ANIBAL 2.8 D 4x4		03/03→		RUN72D	MAG74D	ETS74ND	ETS70D1N-ETS74DI	476420ES
SEAT								
ALHAMBRA 1.8 T 20V	(7V8, 7V9)	10/97→			MAG62DB	ETS60NDB-ETS50NDB		ES60NDB
ALHAMBRA 2.0 i	(7V8, 7V9)	04/96→			MAG62DB	ETS60NDB-ETS50NDB		ES60NDB
ALHAMBRA 2.8 V6	(7V8, 7V9)	06/00→		RUN72D	MAG74D	ETS74ND	ETS70D1N-ETS74DI	476420ES
ALHAMBRA 2.8 V6 4motion	(7V8, 7V9)	02/01→		RUN72D	MAG74D	ETS74ND	ETS70D1N-ETS74DI	476420ES
ALHAMBRA 1.9 TDI	(7V8, 7V9)	04/96→		RUN95D		ETS92ND-ETS95D1N		434440ES
ALHAMBRA 1.9 TDI	(7V8, 7V9)	08/96→06/00		RUN95D		ETS92ND-ETS95D1N		434440ES
ALHAMBRA 1.9 TDI	(7V8, 7V9)	06/00→		RUN95D		ETS92ND-ETS95D1N		434440ES
ALHAMBRA 1.9 TDI 4motion	(7V8, 7V9)	02/01→		RUN95D		ETS92ND-ETS95D1N		434440ES
ALHAMBRA 1.9 TDI	(7V8, 7V9)	11/02→		RUN72D	MAG74D	ETS74ND	ETS70D1N-ETS74DI	476420ES
ALHAMBRA 1.9 TDI	(7V8, 7V9)	05/05→		RUN95D		ETS92ND-ETS95D1N		434440ES
ALHAMBRA 2.0 TDI	(7V8, 7V9)	11/05→		RUN72D	MAG74D	ETS74ND	ETS70D1N-ETS74DI	476420ES
ALTEA 1.2 TSI	(5P1)	04/10→		RUN50D	MAG50D	ETS50ND	ETS50D3N-ETS50D4N	
ALTEA 1.4 16V	(5P1)	05/06→		RUN50D	MAG50D	ETS50ND	ETS50D3N-ETS50D4N	
ALTEA 1.4 TSI	(5P1)	11/07→		RUN50D	MAG50D	ETS50ND	ETS50D3N-ETS50D4N	
ALTEA 1.6	(5P1)	03/04→		RUN50D	MAG50D	ETS50ND	ETS50D3N-ETS50D4N	
ALTEA 1.6 LPG	(5P1)	09/09→		RUN62D				
ALTEA 1.8 TFSI	(5P1)	01/07→		RUN62D				
ALTEA 2.0 FSI	(5P1)	05/04→		RUN62D				
ALTEA 2.0 TFSI	(5P1)	04/06→		RUN62D				
ALTEA 1.6 TDI	(5P1)	10/09→		RUN72D				
ALTEA 1.9 TDI	(5P1)	08/09→		RUN72D				
ALTEA 1.9 TDI	(5P1)	04/04→		RUN72D				
ALTEA 2.0 TDI	(5P1)	03/04→		RUN72D				
ALTEA 2.0 TDI	(5P1)	11/05→		RUN72D				
ALTEA 2.0 TDI 16V	(5P1)	03/04→		RUN72D				
ALTEA 2.0 TDI	(5P1)	03/06→		RUN72D				
ALTEA XL 1.2 TSI	(5P5)	04/10→		RUN50D				
ALTEA XL 1.4 16V	(5P5)	10/06→		RUN50D				
ALTEA XL 1.4 TSI	(5P5)	11/07→		RUN50D				
ALTEA XL 1.6	(5P5)	10/06→		RUN50D				
ALTEA XL 1.6 Multifuel	(5P5)	10/06→		RUN50D				
ALTEA XL 1.6 LPG	(5P5)	09/09→		RUN62D				
ALTEA XL 1.8 TFSI	(5P5)	01/07→		RUN62D				
ALTEA XL 2.0 FSI	(5P5)	10/06→		RUN62D				
ALTEA XL 2.0 TFSI 4x4	(5P5)	06/07→		RUN62D				
ALTEA XL 1.6 TDI	(5P5)	10/09→		RUN72D				

	Design		START	RUN	MAGIS	ETS	ETS alternative	ES
SEAT								
ALTEA XL 1.9 TDI	(5P5)	08/09→		RUN72D				
ALTEA XL 1.9 TDI	(5P5)	10/06→		RUN72D				
ALTEA XL 2.0 TDI	(5P5)	11/06→		RUN72D				
ALTEA XL 2.0 TDI	(5P5)	10/06→		RUN72D				
ALTEA XL 2.0 TDI 4x4	(5P5)	06/07→		RUN72D				
ALTEA XL 2.0 TDI 16V	(5P5)	10/06→		RUN72D				
ALTEA XL 2.0 TDI	(5P5)	06/07→		RUN72D				
ALTEA XL 2.0 TDI 4x4	(5P5)	06/07→		RUN72D				
AROSA 1.0	(6H)	11/98→02/00		RUN50D				
AROSA 1.0	(6H)	05/97→06/04		RUN50D				
AROSA 1.4	(6H)	05/97→06/04		RUN50D				
AROSA 1.4 16V	(6H)	01/00→06/04		RUN50D				
AROSA 1.4 TDI	(6H)	01/00→06/04		RUN62D				
AROSA 1.7 SDI	(6H)	08/97→06/04		RUN62D				
CORDOBA 1.0 i	(6K2/C2)	09/96→06/99		RUN50D				
CORDOBA 1.4 i	(6K2/C2)	06/94→06/99		RUN50D				
CORDOBA 1.4 i 16V	(6K2/C2)	09/96→06/99		RUN50D				
CORDOBA 1.6 i	(6K2/C2)	05/94→06/99		RUN50D				
CORDOBA 1.6 i	(6K2/C2)	02/93→06/99		RUN50D				
CORDOBA 1.6 i	(6K2/C2)	07/96→06/99		RUN50D				
CORDOBA 1.8 i	(6K2/C2)	02/93→06/99		RUN50D				
CORDOBA 1.8 i 16V	(6K2/C2)	10/93→08/96		RUN50D				
CORDOBA 2.0 i	(6K2/C2)	02/93→06/99		RUN62D				
CORDOBA 2.0 i 16V	(6K2/C2)	08/96→06/99		RUN62D				
CORDOBA 1.7 SDI	(6K2/C2)	07/97→06/99		RUN72D				
CORDOBA 1.9 D	(6K2/C2)	01/96→08/96			MAG72DB	ETS71NDB		
CORDOBA 1.9 SDI	(6K2/C2)	08/96→06/99		RUN72D				
CORDOBA 1.9 D	(6K2/C2)	02/93→08/96			MAG72DB	ETS71NDB		
CORDOBA 1.9 TD	(6K2/C2)	02/93→08/96			MAG72DB	ETS71NDB		
CORDOBA 1.9 TDI	(6K2/C2)	08/96→06/99		RUN72D				
CORDOBA 1.9 TDI	(6K2/C2)	03/97→06/99		RUN72D				
CORDOBA Hatchback 2.0		11/95→04/99			MAG62DB	ETS60NDB	ETS60D4N	ES60NDB
CORDOBA Hatchback 2.0		07/96→04/99			MAG62DB	ETS60NDB	ETS60D4N	ES60NDB
CORDOBA Vario 1.4 i	(6K5)	09/96→06/99		RUN50D				
CORDOBA Vario 1.6 i	(6K5)	09/96→06/99		RUN50D				
CORDOBA Vario 1.6 i	(6K5)	09/96→06/99		RUN50D				
CORDOBA Vario 1.7 SDI	(6K5)	07/97→06/99			MAG72DB	ETS71NDB		
CORDOBA Vario 1.9 SDI	(6K5)	09/96→06/99		RUN72D				
CORDOBA Vario 1.9 TDI	(6K5)	08/96→06/99		RUN72D				
CORDOBA Vario 1.9 TDI	(6K5)	07/97→06/99		RUN72D				
CORDOBA 1.0		05/99→09/02		RUN50D				
CORDOBA 1.0		05/00→09/02		RUN50D				
CORDOBA 1.4		05/99→09/02		RUN50D				
CORDOBA 1.4		05/99→09/02		RUN50D				
CORDOBA 1.4		02/00→09/02		RUN50D				
CORDOBA 1.6		08/99→09/02		RUN50D				
CORDOBA 1.6		05/99→09/02		RUN50D				

	Design		START	RUN	MAGIS	ETS	ETS alternative	ES
SEAT								
CORDOBA 1.8		12/99→09/02		RUN62D				
CORDOBA 1.9 D		05/99→09/02		RUN72D	MAG74D	ETS74ND	ETS70D1N-ETS74DI	476420ES
CORDOBA 1.9 D		05/99→09/02		RUN72D	MAG74D	ETS74ND	ETS70D1N-ETS74DI	476420ES
CORDOBA 1.9 D		05/99→09/02		RUN72D	MAG74D	ETS74ND	ETS70D1N-ETS74DI	476420ES
CORDOBA Hatchback 1.0	(6K2)	06/99→10/02		RUN50D				
CORDOBA Hatchback 1.0 16V	(6K2)	05/00→10/02		RUN50D				
CORDOBA Hatchback 1.4	(6K2)	06/99→10/02		RUN50D				
CORDOBA Hatchback 1.4 16V	(6K2)	05/00→10/02		RUN50D				
CORDOBA Hatchback 1.4 16V	(6K2)	02/00→10/02		RUN50D				
CORDOBA Hatchback 1.6	(6K2)	06/99→10/02		RUN50D	MAG50D-MAG45D	ETS50ND-ETS45ND	ETS50D3N-ETS50D4N	436210ES
CORDOBA Hatchback 1.6	(6K2)	06/99→10/02		RUN50D	MAG50D-MAG45D	ETS50ND-ETS45ND	ETS50D3N-ETS50D4N	436210ES
CORDOBA Hatchback 1.8 T 20V Cupra	(6K2)	07/00→10/02		RUN62D				
CORDOBA Hatchback 1.9 SDI	(6K2)	06/99→10/02		RUN72D				
CORDOBA Hatchback 1.9 TDI	(6K2)	06/99→10/02		RUN72D				
CORDOBA Hatchback 1.9 TDI	(6K2)	06/99→10/02		RUN72D				
CORDOBA Vario 1.4	(6K5)	06/99→12/02		RUN50D				
CORDOBA Vario 1.4 16V	(6K5)	06/99→12/02		RUN50D				
CORDOBA Vario 1.4	(6K5)	02/00→12/02		RUN50D				
CORDOBA Vario 1.6	(6K5)	06/99→12/02		RUN50D	MAG50D-MAG45D	ETS50ND-ETS45ND	ETS50D3N-ETS50D4N	436210ES
CORDOBA Vario 1.6	(6K5)	06/99→12/02		RUN50D	MAG50D-MAG45D	ETS50ND-ETS45ND	ETS50D3N-ETS50D4N	436210ES
CORDOBA Vario 1.9 SDI	(6K5)	06/99→12/02		RUN72D				
CORDOBA Vario 1.9 TDI	(6K5)	06/99→12/02		RUN72D				
CORDOBA Vario 1.9 TDI	(6K5)	06/99→12/02		RUN72D				
CORDOBA 1.2	(6L2)	10/02→		RUN50D				
CORDOBA 1.2 12V	(6L2)	05/06→		RUN50D				
CORDOBA 1.4 16V	(6L2)	09/02→		RUN50D				
CORDOBA 1.4 16V	(6L2)	05/06→		RUN50D				
CORDOBA 1.4 16V	(6L2)	10/02→		RUN50D				
CORDOBA 1.6	(6L2)	04/03→		RUN50D	MAG50D	ETS50ND	ETS50D3N-ETS50D4N	
CORDOBA 1.6 16V	(6L2)	11/06→		RUN50D				
CORDOBA 2.0	(6L2)	09/02→		RUN62D				
CORDOBA 1.4 TDI	(6L2)	05/05→		RUN62D	MAG62D	ETS62ND	ETS60D3N	438320ES
CORDOBA 1.4 TDI	(6L2)	10/02→		RUN62D				
CORDOBA 1.4 TDI	(6L2)	06/05→		RUN62D	MAG62D	ETS62ND	ETS60D3N	438320ES
CORDOBA 1.9 SDI	(6L2)	09/02→		RUN72D	MAG74D	ETS74ND	ETS70D1N-ETS74DI	476420ES
CORDOBA 1.9 TDI	(6L2)	09/02→		RUN72D	MAG74D	ETS74ND	ETS70D1N-ETS74DI	476420ES
CORDOBA 1.9 TDI	(6L2)	10/02→		RUN72D				
EXEO 1.6	(3R2)	03/09→		RUN62D				
EXEO 1.8 T	(3R2)	03/09→		RUN62D				
EXEO 2.0 TFSI	(3R2)	03/09→		RUN62D				
EXEO 2.0 TDI	(3R2)	08/09→		RUN72D				
EXEO 2.0 TDI	(3R2)	03/09→		RUN72D				
EXEO 2.0 TDI	(3R2)	03/09→		RUN72D				
EXEO ST 1.6	(3R5)	06/09→		RUN62D				
EXEO ST 1.8 T	(3R5)	06/09→		RUN62D				
EXEO ST 2.0 TFSI	(3R5)	06/09→		RUN62D				
EXEO ST 2.0 TDI	(3R5)	08/09→		RUN72D				

	Design		START	RUN	MAGIS	ETS	ETS alternative	ES
SEAT								
EXEO ST 2.0 TDI	(3R5)	06/09→		RUN72D				
EXEO ST 2.0 TDI	(3R5)	06/09→		RUN72D				
IBIZA I 0.9	(021A)	08/90→05/93		RUN50D	MAG50D-MAG45D	ETS50ND-ETS45ND	ETS50D3N-ETS50D4N	436210ES
IBIZA I 1.7	(021A)	01/91→05/93				ETS40NS		
IBIZA I 1.7	(021A)	01/91→05/93				ETS40NS		
IBIZA I 1.7 D	(021A)	08/90→05/93				ETS55NS		
IBIZA II 1.0 i	(6K1)	09/96→08/99		RUN50D				
IBIZA II 1.0	(6K1)	03/93→09/96		RUN50D				
IBIZA II 1.3 i	(6K1)	03/93→08/99		RUN50D				
IBIZA II 1.4	(6K1)	12/97→04/99		RUN50D				
IBIZA II 1.4 i	(6K1)	09/93→08/99		RUN50D				
IBIZA II 1.4 i 16V	(6K1)	09/96→08/99		RUN50D				
IBIZA II 1.6 i	(6K1)	09/94→06/99		RUN50D				
IBIZA II 1.6 i	(6K1)	04/96→08/99		RUN50D				
IBIZA II 1.6 i	(6K1)	03/93→08/99		RUN50D				
IBIZA II 1.8 i	(6K1)	03/93→08/99		RUN62D				
IBIZA II 1.8 i 16V	(6K1)	11/93→08/96		RUN62D				
IBIZA II 2.0 i	(6K1)	03/93→08/99		RUN62D				
IBIZA II 2.0 i 16V	(6K1)	08/96→08/99		RUN62D				
IBIZA II 1.7 SDI	(6K1)	07/97→08/99				ETS55NS		
IBIZA II 1.9 D	(6K1)	04/93→08/96				ETS55NS		
IBIZA II 1.9 SDI	(6K1)	08/96→08/99				ETS55NS		
IBIZA II 1.9 D	(6K1)	10/94→08/96				ETS55NS		
IBIZA II 1.9 TD	(6K1)	03/93→08/96				ETS55NS		
IBIZA II 1.9 TDI	(6K1)	08/96→08/99				ETS55NS		
IBIZA II 1.9 TDI	(6K1)	02/97→08/99				ETS55NS		
IBIZA III 1.0	(6K1)	08/99→02/02		RUN50D				
IBIZA III 1.0	(6K1)	06/00→02/02		RUN50D				
IBIZA III 1.0 16V	(6K1)	05/00→02/02		RUN50D				
IBIZA III 1.4	(6K1)	08/99→02/02		RUN50D				
IBIZA III 1.4 16V	(6K1)	05/00→02/02		RUN50D				
IBIZA III 1.4 16V	(6K1)	08/99→02/02		RUN50D				
IBIZA III 1.6	(6K1)	08/99→02/02		RUN50D				
IBIZA III 1.6	(6K1)	08/99→02/02		RUN50D				
IBIZA III 1.8 T 20V Cupra	(6K1)	07/00→02/02		RUN62D				
IBIZA III 2.0	(6K1)	04/02→		RUN62D				
IBIZA III 1.9 SDI	(6K1)	08/99→02/02		RUN72D				
IBIZA III 1.9 TDI	(6K1)	08/99→02/02		RUN72D				
IBIZA III 1.9 TDI	(6K1)	08/99→02/02		RUN72D				
IBIZA IV 1.2	(6L1)	06/07→05/08		RUN50D				
IBIZA IV 1.2	(6L1)	02/02→06/06		RUN50D				
IBIZA IV 1.2 12V	(6L1)	05/06→		RUN50D				
IBIZA IV 1.4 16V	(6L1)	02/02→12/07		RUN50D				
IBIZA IV 1.4 16V	(6L1)	05/06→		RUN50D				
IBIZA IV 1.4 16V	(6L1)	02/02→		RUN50D				
IBIZA IV 1.6	(6L1)	02/03→		RUN62D				
IBIZA IV 1.6 16V	(6L1)	11/06→		RUN50D				

	Design		START	RUN	MAGIS	ETS	ETS alternative	ES
SEAT								
IBIZA IV 1.8 T FR	(6L1)	12/03→05/08		RUN62D	MAG62D	ETS62ND	ETS60D3N	438320ES
IBIZA IV 1.8 T Cupra R	(6L1)	01/04→02/08		RUN62D				
IBIZA IV 2.0	(6L1)	04/02→		RUN62D				
IBIZA IV 1.4 TDI	(6L1)	05/05→		RUN72D				
IBIZA IV 1.4 TDI	(6L1)	05/02→12/05		RUN72D				
IBIZA IV 1.4 TDI	(6L1)	06/05→		RUN72D				
IBIZA IV 1.9 SDI	(6L1)	02/02→12/05		RUN72D	MAG74D	ETS74ND	ETS70D1N-ETS74DI	476420ES
IBIZA IV 1.9 TDI	(6L1)	02/02→		RUN72D	MAG74D	ETS74ND	ETS70D1N-ETS74DI	476420ES
IBIZA IV 1.9 TDI	(6L1)	02/02→		RUN72D	MAG74D	ETS74ND	ETS70D1N-ETS74DI	476420ES
IBIZA IV 1.9 TDI Cupra R	(6L1)	03/04→02/08		RUN72D	MAG74D	ETS74ND	ETS70D1N-ETS74DI	476420ES
IBIZA V 1.2 TSI	(6J5)	09/10→		RUN50D				
IBIZA V 1.2	(6J5)	03/08→		RUN50D				
IBIZA V 1.4	(6J5)	03/08→		RUN50D				
IBIZA V 1.4 TSI	(6J5)	06/09→		RUN50D				
IBIZA V 1.6	(6J5)	05/08→		RUN62D				
IBIZA V 2.0	(6J5)	10/08→		RUN62D				
IBIZA V 1.4 TDI	(6J5)	07/08→		RUN62D				
IBIZA V 1.6 TDI	(6J5)	05/09→		RUN72D				
IBIZA V 1.6 TDI	(6J5)	05/09→		RUN72D				
IBIZA V 1.9 TDI	(6J5)	07/08→		RUN72D				
IBIZA V 1.9 TDI	(6J5)	03/08→		RUN72D				
IBIZA V 2.0 TDI	(6J5)	01/10→		RUN72D				
IBIZA V ST 1.2	(6J8)	05/10→		RUN62D				
IBIZA V ST 1.2	(6J8)	05/10→		RUN62D				
IBIZA V ST 1.2 TSI	(6J8)	09/10→		RUN62D				
IBIZA V ST 1.4	(6J8)	03/10→		RUN62D				
IBIZA V ST 1.2 TDI	(6J8)	04/10→		RUN72D				
IBIZA V ST 1.6 TDI	(6J8)	03/10→		RUN72D				
IBIZA V ST 1.6 TDI	(6J8)	03/10→		RUN72D				
IBIZA V SPORTCOUPE 1.2 TSI	(6J1)	09/10→		RUN50D				
IBIZA V SPORTCOUPE 1.2	(6J1)	07/09→		RUN50D				
IBIZA V SPORTCOUPE 1.2	(6J1)	07/08→		RUN50D				
IBIZA V SPORTCOUPE 1.4	(6J1)	07/08→		RUN50D				
IBIZA V SPORTCOUPE 1.4 TSI	(6J1)	06/09→		RUN50D				
IBIZA V SPORTCOUPE 1.4 TSI	(6J1)	06/09→		RUN50D				
IBIZA V SPORTCOUPE 1.6	(6J1)	07/08→		RUN62D				
IBIZA V SPORTCOUPE 2.0	(6J1)	10/08→		RUN62D				
IBIZA V SPORTCOUPE 1.4 TDI	(6J1)	07/08→		RUN62D				
IBIZA V SPORTCOUPE 1.6 TDI	(6J1)	05/09→		RUN72D				
IBIZA V SPORTCOUPE 1.6 TDI	(6J1)	05/09→		RUN72D				
IBIZA V SPORTCOUPE 1.9 TDI	(6J1)	07/08→		RUN72D				
IBIZA V SPORTCOUPE 1.9 TDI	(6J1)	07/08→		RUN72D				
IBIZA V SPORTCOUPE 2.0 TDI	(6J1)	01/10→		RUN72D				
INCA 1.4 i	(6K9)	11/95→06/03		RUN50D				
INCA 1.6 i	(6K9)	11/95→05/98		RUN50D				
INCA 1.7 D	(6K9)	09/96→06/03			MAG62DB	ETS60NDB-ETS50NDB		ES60NDB
INCA 1.9 D	(6K9)	11/95→06/03			MAG72DB	ETS71NDB		

	Design		START	RUN	MAGIS	ETS	ETS alternative	ES
SEAT								
INCA 1.9 SDI	(6K9)	11/95→06/03			MAG72DB	ETS71NDB		
INCA 1.9 TDI	(6K9)	09/96→06/03			MAG72DB	ETS71NDB		
LEON 1.4 16V	(1M1)	11/99→06/06		RUN50D				
LEON 1.6	(1M1)	11/99→06/06		RUN62D				
LEON 1.6	(1M1)	10/05→06/06		RUN62D				
LEON 1.6 16 V	(1M1)	09/00→06/06		RUN62D				
LEON 1.8 20V	(1M1)	11/99→06/06		RUN62D	MAG62D	ETS62ND	ETS60D3N	438320ES
LEON 1.8 20V T	(1M1)	11/99→06/06		RUN62D	MAG62D	ETS62ND	ETS60D3N	438320ES
LEON 1.8 20V T 4	(1M1)	11/99→06/06		RUN72D				
LEON 1.8 T Cupra R	(1M1)	02/02→06/06		RUN62D	MAG62D	ETS62ND	ETS60D3N	438320ES
LEON 1.8 Turbo 4x4	(1M1)	05/02→05/03		RUN62D				
LEON 1.8 T Cupra R	(1M1)	07/03→06/06		RUN62D	MAG62D	ETS62ND	ETS60D3N	438320ES
LEON 2.3 VR5	(1M1)	09/00→11/03		RUN62D				
LEON 2.8	(1M1)	05/02→06/04		RUN72D	MAG74D	ETS74ND	ETS70D1N-ETS74DI	476420ES
LEON 2.8 Cupra 4	(1M1)	02/01→06/06		RUN72D				
LEON 1.9 SDI	(1M1)	11/99→06/06		RUN72D				
LEON 1.9 TDI	(1M1)	11/99→06/06		RUN72D				
LEON 1.9 TDI	(1M1)	10/05→06/06		RUN72D	MAG74D	ETS74ND	ETS70D1N-ETS74DI	476420ES
LEON 1.9 TDI	(1M1)	11/99→06/06		RUN72D				
LEON 1.9 TDI	(1M1)	05/03→06/06		RUN72D	MAG74D	ETS74ND	ETS70D1N-ETS74DI	476420ES
LEON 1.9 TDI	(1M1)	02/01→06/06		RUN72D				
LEON 1.9 TDI Syncro	(1M1)	05/02→06/06		RUN72D	MAG74D	ETS74ND	ETS70D1N-ETS74DI	476420ES
LEON 1.2 TSI	(1P1)	02/10→		RUN62D				
LEON 1.4 16V	(1P1)	06/06→		RUN50D				
LEON 1.4 TSI	(1P1)	11/07→		RUN50D				
LEON 1.6	(1P1)	07/05→		RUN62D				
LEON 1.6 LPG	(1P1)	12/09→		RUN62D				
LEON 1.8 TSI	(1P1)	06/07→		RUN62D				
LEON 2.0 FSI	(1P1)	07/05→		RUN62D				
LEON 2.0 TFSI	(1P1)	09/05→05/06		RUN62D				
LEON 2.0 TFSI	(1P1)	05/05→		RUN62D				
LEON 2.0 TFSI	(1P1)	06/09→		RUN62D				
LEON 2.0 TFSI	(1P1)	11/06→		RUN62D				
LEON 2.0 TFSI	(1P1)	09/09→		RUN62D				
LEON 1.9 TDI	(1P1)	06/07→		RUN72D				
LEON 1.9 TDI	(1P1)	07/05→		RUN72D				
LEON 1.9 TDi	(1P1)	10/05→		RUN72D				
LEON 2.0 TDI	(1P1)	07/05→		RUN72D				
LEON 2.0 TDI	(1P1)	10/05→		RUN72D				
LEON 2.0 TDI 16V	(1P1)	07/05→		RUN72D				
LEON 2.0 TDI	(1P1)	05/06→		RUN72D				
MALAGA 1.7 D	(023A)	05/90→12/93				ETS55NS		
MARBELLA 0.9 CAT	(28)	01/90→11/96				ETS40NS		
TERRA 0.9 CAT	(24)	02/92→12/94				ETS40NS		
TERRA 1.3 D	(24)	03/90→12/94				ETS40NS		
TERRA 1.4 D	(24)	10/90→12/95				ETS40NS		
TERRA Box 0.9 CAT	(024A)	01/90→12/95				ETS40NS		

	Design		START	RUN	MAGIS	ETS	ETS alternative	ES
SEAT								
TERRA Box 1.3 D	(024A)	03/90→02/92				ETS40NS		
TERRA Box 1.4 D	(024A)	10/90→02/92				ETS40NS		
TOLEDO I 1.8 i	(1L)	05/91→12/96			MAG62DB	ETS60NDB	ETS60D4N	ES60NDB
TOLEDO I 1.8 i	(1L)	11/93→12/96			MAG62DB	ETS60NDB	ETS60D4N	ES60NDB
TOLEDO I 1.8 16V	(1L)	05/91→03/99			MAG62DB	ETS60NDB	ETS60D4N	ES60NDB
TOLEDO I 1.8 16V	(1L)	05/91→03/99			MAG62DB	ETS60NDB	ETS60D4N	ES60NDB
TOLEDO I 2.0 i	(1L)	05/91→03/99			MAG62DB	ETS60NDB	ETS60D4N	ES60NDB
TOLEDO I 2.0 i 16V	(1L)	11/93→03/99			MAG62DB	ETS60NDB	ETS60D4N	ES60NDB
TOLEDO I 1.9 D	(1L)	12/95→03/99			MAG72DB	ETS71NDB		
TOLEDO I 1.9 D	(1L)	05/91→03/99			MAG72DB	ETS71NDB		
TOLEDO I 1.9 TD	(1L)	05/91→03/99			MAG72DB	ETS71NDB		
TOLEDO I 1.9 TDI	(1L)	08/95→03/99			MAG72DB	ETS71NDB		
TOLEDO I 1.9 TDI	(1L)	11/96→03/99		RUN72D				
TOLEDO II 1.4 16V	(1M2)	07/99→05/06		RUN62D				
TOLEDO II 1.6	(1M2)	04/99→09/00		RUN62D				
TOLEDO II 1.6	(1M2)	08/05→05/06		RUN62D				
TOLEDO II 1.6 16V	(1M2)	09/00→05/06		RUN62D				
TOLEDO II 1.8 20V	(1M2)	04/99→05/06		RUN62D				
TOLEDO II 1.8 All-wheel Drive	(1M2)	05/01→04/04		RUN62D				
TOLEDO II 1.8 20VT	(1M2)	05/01→05/06		RUN62D				
TOLEDO II 1.8 All-wheel Drive	(1M2)	05/02→05/03		RUN62D				
TOLEDO II 1.8 All-wheel Drive	(1M2)	05/03→10/05		RUN62D				
TOLEDO II 2.3 V5	(1M2)	04/99→05/01		RUN62D				
TOLEDO II 2.3 V5 20V	(1M2)	05/01→05/06		RUN62D				
TOLEDO II 1.9 SDI	(1M2)	11/99→06/04		RUN72D	MAG74D	ETS74ND	ETS70D1N-ETS74DI	476420ES
TOLEDO II 1.9 TDi	(1M2)	08/05→05/06		RUN72D	MAG74D	ETS74ND	ETS70D1N-ETS74DI	476420ES
TOLEDO II 1.9 TDI	(1M2)	04/99→05/06		RUN72D				
TOLEDO II 1.9 TDI	(1M2)	04/99→05/06		RUN72D				
TOLEDO II 1.9 TDI	(1M2)	05/03→05/06		RUN72D	MAG74D	ETS74ND	ETS70D1N-ETS74DI	476420ES
TOLEDO II 1.9 TDI	(1M2)	10/00→05/06		RUN72D				
TOLEDO II 2.8	(1M2)	10/00→07/01		RUN72D	MAG74D	ETS74ND	ETS70D1N-ETS74DI	476420ES
TOLEDO II 2.8 4x4	(1M2)	05/02→04/04		RUN72D	MAG74D	ETS74ND	ETS70D1N-ETS74DI	476420ES
TOLEDO III 1.6	(5P2)	10/04→05/09		RUN62D				
TOLEDO III 1.8 TFSI	(5P2)	01/07→		RUN62D				
TOLEDO III 2.0 FSI	(5P2)	10/04→		RUN72D	MAG74D	ETS74ND	ETS70D1N-ETS74DI	476420ES
TOLEDO III 2.0 TFSI	(5P2)	11/05→05/09		RUN72D				
TOLEDO III 1.9 TDI	(5P2)	10/04→		RUN72D				
TOLEDO III 2.0 TDI	(5P2)	09/04→05/09		RUN72D				
TOLEDO III 2.0 TDI	(5P2)	11/05→05/09		RUN72D				
TOLEDO III 2.0 TDI 16V	(5P2)	04/04→05/09		RUN72D				
TOLEDO III 2.0 TDI	(5P2)	01/06→05/09		RUN72D				
SKODA								
FABIA 1.0	(6Y2)	12/99→08/02		RUN50D				
FABIA 1.2	(6Y2)	08/02→03/08		RUN50D				
FABIA 1.2	(6Y2)	01/03→03/08		RUN50D				
FABIA 1.4	(6Y2)	08/00→08/02		RUN50D				

	Design		START	RUN	MAGIS	ETS	ETS alternative	ES
SKODA								
FABIA 1.4	(6Y2)	08/99→03/08		RUN50D				
FABIA 1.4 16V	(6Y2)	12/99→03/08		RUN50D	MAG50D	ETS50ND	ETS50D3N-ETS50D4N	
FABIA 1.4	(6Y2)	02/06→10/06		RUN50D				
FABIA 1.4 16V	(6Y2)	12/99→03/08		RUN50D	MAG50D	ETS50ND	ETS50D3N-ETS50D4N	
FABIA 2.0	(6Y2)	12/99→03/08		RUN62D				
FABIA 1.4 TDI	(6Y2)	10/05→03/08		RUN72D	MAG74D	ETS74ND	ETS70D1N-ETS74DI	476420ES
FABIA 1.4 TDI	(6Y2)	04/03→03/08		RUN62D				
FABIA 1.4 TDI	(6Y2)	10/05→03/08		RUN72D	MAG74D	ETS74ND	ETS70D1N-ETS74DI	476420ES
FABIA 1.9 SDI	(6Y2)	12/99→03/08		RUN72D	MAG74D	ETS74ND	ETS70D1N-ETS74DI	476420ES
FABIA 1.9 TDI	(6Y2)	01/00→03/08		RUN72D				
FABIA 1.9 TDI RS	(6Y2)	06/03→03/08		RUN72D	MAG74D	ETS74ND	ETS70D1N-ETS74DI	476420ES
FABIA Saloon 1.2	(6Y3)	07/01→12/07		RUN50D				
FABIA Saloon 1.2	(6Y3)	01/03→12/07		RUN50D				
FABIA Saloon 1.4	(6Y3)	04/00→08/02		RUN50D				
FABIA Saloon 1.4	(6Y3)	07/01→12/07		RUN50D				
FABIA Saloon 1.4 16V	(6Y3)	10/99→12/07		RUN50D	MAG50D	ETS50ND	ETS50D3N-ETS50D4N	
FABIA Saloon 1.4 16V	(6Y3)	04/06→12/07		RUN50D				
FABIA Saloon 1.4 16V	(6Y3)	12/99→12/07		RUN50D	MAG50D	ETS50ND	ETS50D3N-ETS50D4N	
FABIA Saloon 2.0	(6Y3)	12/99→12/07		RUN62D				
FABIA Saloon 1.4 TDI	(6Y3)	10/05→12/07		RUN72D	MAG74D	ETS74ND	ETS70D1N-ETS74DI	476420ES
FABIA Saloon 1.4 TDI	(6Y3)	04/03→12/07		RUN62D				
FABIA Saloon 1.4 TDI	(6Y3)	10/05→12/07		RUN72D	MAG74D	ETS74ND	ETS70D1N-ETS74DI	476420ES
FABIA Saloon 1.9 SDI	(6Y3)	11/99→12/07		RUN72D	MAG74D	ETS74ND	ETS70D1N-ETS74DI	476420ES
FABIA Saloon 1.9 TDI	(6Y3)	01/00→12/07		RUN72D	MAG74D	ETS74ND	ETS70D1N-ETS74DI	476420ES
FABIA Combi 1.2	(6Y5)	07/01→12/07		RUN50D				
FABIA Combi 1.2	(6Y5)	01/03→12/07		RUN50D				
FABIA Combi 1.4	(6Y5)	04/00→12/07		RUN50D				
FABIA Combi 1.4	(6Y5)	04/00→12/07		RUN50D				
FABIA Combi 1.4 16V	(6Y5)	05/00→12/07		RUN50D	MAG50D	ETS50ND	ETS50D3N-ETS50D4N	
FABIA Combi 1.4 16V	(6Y5)	04/06→12/07		RUN50D				
FABIA Combi 1.4 16V	(6Y5)	04/00→12/07		RUN50D	MAG50D	ETS50ND	ETS50D3N-ETS50D4N	
FABIA Combi 2.0	(6Y5)	04/00→12/07		RUN62D				
FABIA Combi 1.4 TDI	(6Y5)	10/05→12/07		RUN72D	MAG74D	ETS74ND	ETS70D1N-ETS74DI	476420ES
FABIA Combi 1.4 TDI	(6Y5)	04/03→12/07		RUN72D	MAG74D	ETS74ND	ETS70D1N-ETS74DI	476420ES
FABIA Combi 1.4 TDI	(6Y5)	10/05→12/07		RUN72D	MAG74D	ETS74ND	ETS70D1N-ETS74DI	476420ES
FABIA Combi 1.9 SDI	(6Y5)	04/00→12/07		RUN72D	MAG74D	ETS74ND	ETS70D1N-ETS74DI	476420ES
FABIA Combi 1.9 TDI	(6Y5)	04/00→12/07		RUN72D	MAG74D	ETS74ND	ETS70D1N-ETS74DI	476420ES
FABIA Praktik 1.2		07/01→12/07		RUN50D	MAG50D	ETS50ND	ETS50D3N-ETS50D4N	
FABIA Praktik 1.2		01/03→12/07		RUN50D	MAG50D	ETS50ND	ETS50D3N-ETS50D4N	
FABIA Praktik 1.4		07/01→12/07		RUN50D	MAG50D	ETS50ND	ETS50D3N-ETS50D4N	
FABIA Praktik 1.4 TDI		10/05→12/07		RUN72D	MAG74D	ETS74ND	ETS70D1N-ETS74DI	476420ES
FABIA Praktik 1.9 SDI		07/01→12/07		RUN72D	MAG74D	ETS74ND	ETS70D1N-ETS74DI	476420ES
FABIA 1.2		12/06→		RUN50D	MAG50D	ETS50ND	ETS50D3N-ETS50D4N	
FABIA 1.2		01/07→		RUN50D	MAG50D	ETS50ND	ETS50D3N-ETS50D4N	
FABIA 1.2 TSI		03/10→		RUN50D	MAG50D	ETS50ND	ETS50D3N-ETS50D4N	
FABIA 1.2 TSI		03/10→		RUN50D	MAG50D	ETS50ND	ETS50D3N-ETS50D4N	
FABIA 1.4		01/07→		RUN50D	MAG50D	ETS50ND	ETS50D3N-ETS50D4N	

	Design		START	RUN	MAGIS	ETS	ETS alternative	ES
SKODA								
FABIA 1.4 TSI		05/10→		RUN50D	MAG50D	ETS50ND	ETS50D3N-ETS50D4N	
FABIA 1.6		04/07→		RUN50D	MAG50D	ETS50ND	ETS50D3N-ETS50D4N	
FABIA 1.4 TDI		02/07→		RUN62D				
FABIA 1.4 TDI		01/07→		RUN62D				
FABIA 1.6 TDI		04/10→		RUN72D	MAG74D	ETS74ND	ETS70D1N-ETS74DI	476420ES
FABIA 1.6 TDI		03/10→		RUN72D	MAG74D	ETS74ND	ETS70D1N-ETS74DI	476420ES
FABIA 1.6 TDI		03/10→		RUN72D	MAG74D	ETS74ND	ETS70D1N-ETS74DI	476420ES
FABIA 1.9 TDI		04/07→		RUN72D	MAG74D	ETS74ND	ETS70D1N-ETS74DI	476420ES
FABIA Combi 1.2		10/07→		RUN50D	MAG50D	ETS50ND	ETS50D3N-ETS50D4N	
FABIA Combi 1.2		10/07→		RUN50D	MAG50D	ETS50ND	ETS50D3N-ETS50D4N	
FABIA Combi 1.2 TSI		03/10→		RUN50D	MAG50D	ETS50ND	ETS50D3N-ETS50D4N	
FABIA Combi 1.2 TSI		03/10→		RUN50D	MAG50D	ETS50ND	ETS50D3N-ETS50D4N	
FABIA Combi 1.4		10/07→		RUN50D	MAG50D	ETS50ND	ETS50D3N-ETS50D4N	
FABIA Combi 1.4 TSI		05/10→		RUN50D	MAG50D	ETS50ND	ETS50D3N-ETS50D4N	
FABIA Combi 1.6		10/07→		RUN50D	MAG50D	ETS50ND	ETS50D3N-ETS50D4N	
FABIA Combi 1.4 TDI		10/07→		RUN62D				
FABIA Combi 1.4 TDI		10/07→		RUN62D				
FABIA Combi 1.6 TDI		04/10→		RUN72D	MAG74D	ETS74ND	ETS70D1N-ETS74DI	476420ES
FABIA Combi 1.6 TDI		03/10→		RUN72D	MAG74D	ETS74ND	ETS70D1N-ETS74DI	476420ES
FABIA Combi 1.6 TDI		03/10→		RUN72D	MAG74D	ETS74ND	ETS70D1N-ETS74DI	476420ES
FABIA Combi 1.9 TDI		10/07→		RUN72D	MAG74D	ETS74ND	ETS70D1N-ETS74DI	476420ES
FAVORIT 1.3 135 X,LX,GLX (781)	(781)	01/90→09/94		RUN50D	MAG50D	ETS50ND	ETS50D3N-ETS50D4N	
FAVORIT 1.3 135 (781)	(781)	12/91→09/94		RUN50D	MAG50D	ETS50ND	ETS50D3N-ETS50D4N	
FAVORIT 1.3 135 (781)	(781)	12/91→09/94		RUN50D	MAG50D	ETS50ND	ETS50D3N-ETS50D4N	
FAVORIT 1.3 135 (781)	(781)	10/90→09/94		RUN50D	MAG50D	ETS50ND	ETS50D3N-ETS50D4N	
FAVORIT 1.3 136 (781)	(781)	10/90→09/94		RUN50D	MAG50D	ETS50ND	ETS50D3N-ETS50D4N	
FAVORIT 1.3 (781)	(781)	01/94→09/94		RUN50D	MAG50D	ETS50ND	ETS50D3N-ETS50D4N	
FAVORIT Forman 1.3 (135 E)	(785)	09/91→06/95		RUN50D	MAG50D	ETS50ND	ETS50D3N-ETS50D4N	
FAVORIT Forman 1.3 (135)	(785)	12/91→06/95		RUN50D	MAG50D	ETS50ND	ETS50D3N-ETS50D4N	
FAVORIT Forman 1.3 (136)	(785)	08/91→06/95		RUN50D	MAG50D	ETS50ND	ETS50D3N-ETS50D4N	
FAVORIT Forman 1.3	(785)	01/94→06/95		RUN50D	MAG50D	ETS50ND	ETS50D3N-ETS50D4N	
FAVORIT Pickup 1.3	(787)	12/92→06/97		RUN50D	MAG50D	ETS50ND	ETS50D3N-ETS50D4N	
FAVORIT Pickup 1.3	(787)	12/92→06/97		RUN50D	MAG50D	ETS50ND	ETS50D3N-ETS50D4N	
FAVORIT Pickup 1.3	(787)	06/92→09/93			MAG44DB	ETS44NDB		ES45NDB
FAVORIT Pickup 1.3	(787)	12/92→06/97		RUN50D	MAG50D	ETS50ND	ETS50D3N-ETS50D4N	
FELICIA I 1.3	(6U1)	10/94→03/98		RUN50D	MAG50D	ETS50ND	ETS50D3N-ETS50D4N	
FELICIA I 1.3	(6U1)	10/94→03/98		RUN50D	MAG50D	ETS50ND	ETS50D3N-ETS50D4N	
FELICIA I 1.3	(6U1)	10/94→03/98		RUN50D	MAG50D	ETS50ND	ETS50D3N-ETS50D4N	
FELICIA I 1.6 LX	(6U1)	08/95→03/98		RUN50D	MAG50D	ETS50ND	ETS50D3N-ETS50D4N	
FELICIA I 1.9 D	(6U1)	10/95→03/98		RUN62D	MAG62D	ETS62ND	ETS60D3N	438320ES
FELICIA I Estate 1.3 LX	(6U5)	08/95→03/98		RUN50D	MAG50D	ETS50ND	ETS50D3N-ETS50D4N	
FELICIA I Estate 1.3	(6U5)	08/95→03/98		RUN50D	MAG50D	ETS50ND	ETS50D3N-ETS50D4N	
FELICIA I Estate 1.3 LXI	(6U5)	08/95→03/98		RUN50D	MAG50D	ETS50ND	ETS50D3N-ETS50D4N	
FELICIA I Estate 1.6 GLX	(6U5)	08/95→03/98		RUN50D	MAG50D	ETS50ND	ETS50D3N-ETS50D4N	
FELICIA I Estate 1.9 D	(6U5)	10/95→03/98		RUN62D	MAG62D	ETS62ND	ETS60D3N	438320ES
FELICIA I Fun 1.3	(797)	06/97→		RUN50D	MAG50D	ETS50ND	ETS50D3N-ETS50D4N	
FELICIA I Fun 1.3	(797)	10/95→04/02			MAG62DB	ETS60NDB-ETS50NDB		ES60NDB

	Design		START	RUN	MAGIS	ETS	ETS alternative	ES
SKODA								
FELICIA I Fun 1.3	(797)	06/97→		RUN50D	MAG50D	ETS50ND	ETS50D3N-ETS50D4N	
FELICIA I Fun 1.6	(797)	06/97→		RUN50D	MAG50D	ETS50ND	ETS50D3N-ETS50D4N	
FELICIA I Fun 1.9 D	(797)	06/97→		RUN62D				
FELICIA II 1.3	(6U1)	01/98→06/01		RUN50D	MAG50D	ETS50ND	ETS50D3N-ETS50D4N	
FELICIA II 1.3	(6U1)	01/98→06/01		RUN50D	MAG50D	ETS50ND	ETS50D3N-ETS50D4N	
FELICIA II 1.3	(6U1)	01/98→06/01		RUN50D	MAG50D	ETS50ND	ETS50D3N-ETS50D4N	
FELICIA II 1.6	(6U1)	01/98→06/01		RUN50D	MAG50D	ETS50ND	ETS50D3N-ETS50D4N	
FELICIA II 1.9 D	(6U1)	01/98→06/01		RUN62D	MAG62D	ETS62ND	ETS60D3N	438320ES
FELICIA II Estate 1.3	(6U5)	01/98→06/01		RUN50D	MAG50D	ETS50ND	ETS50D3N-ETS50D4N	
FELICIA II Estate 1.6	(6U5)	01/98→06/01		RUN50D	MAG50D	ETS50ND	ETS50D3N-ETS50D4N	
FELICIA II Estate 1.9 D	(6U5)	01/98→06/01		RUN62D				
OCTAVIA 1.4	(1U2)	04/99→		RUN50D	MAG50D	ETS50ND	ETS50D3N-ETS50D4N	
OCTAVIA 1.4 16V	(1U2)	09/00→		RUN50D	MAG50D	ETS50ND	ETS50D3N-ETS50D4N	
OCTAVIA 1.6	(1U2)	09/96→09/00		RUN50D				
OCTAVIA 1.6	(1U2)	02/97→		RUN50D				
OCTAVIA 1.6	(1U2)	11/00→		RUN50D				
OCTAVIA 1.8	(1U2)	09/96→		RUN62D	MAG62D	ETS62ND	ETS60D3N	438320ES
OCTAVIA 1.8 T	(1U2)	08/97→		RUN62D	MAG62D	ETS62ND	ETS60D3N	438320ES
OCTAVIA 1.8 T 4x4	(1U2)	05/01→		RUN62D	MAG62D	ETS62ND	ETS60D3N	438320ES
OCTAVIA RS 1.8 T	(1U2)	05/01→		RUN72D	MAG74D	ETS74ND	ETS70D1N-ETS74DI	476420ES
OCTAVIA 2.0	(1U2)	04/99→		RUN62D	MAG62D	ETS62ND	ETS60D3N	438320ES
OCTAVIA 1.9 SDI	(1U2)	06/97→		RUN72D	MAG74D	ETS74ND	ETS70D1N-ETS74DI	476420ES
OCTAVIA 1.9 TDI	(1U2)	09/96→		RUN72D	MAG74D	ETS74ND	ETS70D1N-ETS74DI	476420ES
OCTAVIA 1.9 TDI	(1U2)	10/05→		RUN72D	MAG74D	ETS74ND	ETS70D1N-ETS74DI	476420ES
OCTAVIA 1.9 TDI	(1U2)	08/97→		RUN72D	MAG74D	ETS74ND	ETS70D1N-ETS74DI	476420ES
OCTAVIA 1.9 TDI	(1U2)	01/03→		RUN72D	MAG74D	ETS74ND	ETS70D1N-ETS74DI	476420ES
OCTAVIA Combi 1.4 16V	(1U5)	08/00→		RUN50D	MAG50D	ETS50ND	ETS50D3N-ETS50D4N	
OCTAVIA Combi 1.6	(1U5)	07/98→		RUN50D				
OCTAVIA Combi 1.6	(1U5)	07/98→		RUN50D				
OCTAVIA Combi 1.6	(1U5)	09/00→		RUN50D				
OCTAVIA Combi 1.8 20V	(1U5)	07/98→		RUN62D	MAG62D	ETS62ND	ETS60D3N	438320ES
OCTAVIA Combi 1.8 T	(1U5)	07/98→		RUN62D	MAG62D	ETS62ND	ETS60D3N	438320ES
OCTAVIA Combi 1.8 T 4x4	(1U5)	05/01→		RUN62D	MAG62D	ETS62ND	ETS60D3N	438320ES
OCTAVIA Combi RS 1.8 T	(1U5)	08/02→		RUN72D	MAG74D	ETS74ND	ETS70D1N-ETS74DI	476420ES
OCTAVIA Combi 2.0	(1U5)	04/99→		RUN62D	MAG62D	ETS62ND	ETS60D3N	438320ES
OCTAVIA Combi 2.0 4x4	(1U5)	05/01→		RUN62D	MAG62D	ETS62ND	ETS60D3N	438320ES
OCTAVIA Combi 2.0 4x4	(1U5)	01/00→		RUN62D	MAG62D	ETS62ND	ETS60D3N	438320ES
OCTAVIA Combi 1.9 SDI	(1U5)	07/98→		RUN72D	MAG74D	ETS74ND	ETS70D1N-ETS74DI	476420ES
OCTAVIA Combi 1.9 TDI	(1U5)	07/98→		RUN72D	MAG74D	ETS74ND	ETS70D1N-ETS74DI	476420ES
OCTAVIA Combi 1.9 TDI 4x4	(1U5)	11/99→09/00		RUN72D				
OCTAVIA Combi 1.9 TDI	(1U5)	08/00→		RUN72D	MAG74D	ETS74ND	ETS70D1N-ETS74DI	476420ES
OCTAVIA Combi 1.9 TDI 4x4	(1U5)	09/00→		RUN72D				
OCTAVIA Combi 1.9 TDI	(1U5)	07/98→		RUN72D	MAG74D	ETS74ND	ETS70D1N-ETS74DI	476420ES
OCTAVIA Combi 1.9 TDI	(1U5)	01/03→		RUN72D	MAG74D	ETS74ND	ETS70D1N-ETS74DI	476420ES
OCTAVIA 1.2 TSI	(1Z3)	02/10→		RUN50D				
OCTAVIA 1.4	(1Z3)	05/04→		RUN50D	MAG50D	ETS50ND	ETS50D3N-ETS50D4N	
OCTAVIA 1.4	(1Z3)	06/04→		RUN50D	MAG50D	ETS50ND	ETS50D3N-ETS50D4N	

	Design		START	RUN	MAGIS	ETS	ETS alternative	ES
SKODA								
OCTAVIA 1.4 TSI	(1Z3)	11/08→		RUN50D	MAG50D	ETS50ND	ETS50D3N-ETS50D4N	
OCTAVIA 1.6	(1Z3)	06/04→		RUN50D	MAG50D	ETS50ND	ETS50D3N-ETS50D4N	
OCTAVIA 1.6 FSI	(1Z3)	02/04→		RUN62D				
OCTAVIA 1.6 GreenLine	(1Z3)	01/08→		RUN62D	MAG62D	ETS62ND	ETS60D3N	438320ES
OCTAVIA 1.8 TSI	(1Z3)	06/07→		RUN62D				
OCTAVIA 2.0 FSI	(1Z3)	11/04→		RUN62D	MAG62D	ETS62ND	ETS60D3N	438320ES
OCTAVIA 2.0 RS	(1Z3)	10/05→		RUN62D	MAG62D	ETS62ND	ETS60D3N	438320ES
OCTAVIA 1.6 TDI	(1Z3)	06/09→		RUN62D	MAG62D	ETS62ND	ETS60D3N	438320ES
OCTAVIA 1.9 TDI	(1Z3)	06/04→		RUN72D	MAG74D	ETS74ND	ETS70D1N-ETS74DI	476420ES
OCTAVIA 2.0 TDI	(1Z3)	02/04→		RUN72D	MAG74D	ETS74ND	ETS70D1N-ETS74DI	476420ES
OCTAVIA 2.0 TDI	(1Z3)	11/05→		RUN72D	MAG74D	ETS74ND	ETS70D1N-ETS74DI	476420ES
OCTAVIA 2.0 TDI 16V	(1Z3)	02/04→		RUN72D	MAG74D	ETS74ND	ETS70D1N-ETS74DI	476420ES
OCTAVIA 2.0 TDI	(1Z3)	04/06→		RUN72D	MAG74D	ETS74ND	ETS70D1N-ETS74DI	476420ES
OCTAVIA Combi 1.2 TSI	(1Z5)	02/10→		RUN50D				
OCTAVIA Combi 1.4	(1Z5)	05/06→		RUN50D	MAG50D	ETS50ND	ETS50D3N-ETS50D4N	
OCTAVIA Combi 1.4 TSI	(1Z5)	11/08→		RUN50D	MAG50D	ETS50ND	ETS50D3N-ETS50D4N	
OCTAVIA Combi 1.6	(1Z5)	09/04→		RUN50D	MAG50D	ETS50ND	ETS50D3N-ETS50D4N	
OCTAVIA Combi 1.6 FSI	(1Z5)	02/04→		RUN50D	MAG50D	ETS50ND	ETS50D3N-ETS50D4N	
OCTAVIA Combi 1.6 MultiFuel	(1Z5)	01/08→		RUN62D	MAG62D	ETS62ND	ETS60D3N	438320ES
OCTAVIA Combi 1.8 TSI	(1Z5)	06/07→		RUN62D				
OCTAVIA Combi 1.8 TSI 4x4	(1Z5)	11/08→		RUN62D	MAG62D	ETS62ND	ETS60D3N	438320ES
OCTAVIA Combi 2.0 FSI	(1Z5)	11/04→		RUN62D				
OCTAVIA Combi 2.0 FSI 4x4	(1Z5)	11/04→		RUN62D				
OCTAVIA Combi 2.0 RS	(1Z5)	10/05→		RUN72D	MAG74D	ETS74ND	ETS70D1N-ETS74DI	476420ES
OCTAVIA Combi 1.6 TDI	(1Z5)	06/09→		RUN62D	MAG62D	ETS62ND	ETS60D3N	438320ES
OCTAVIA Combi 1.9 TDI	(1Z5)	09/04→		RUN72D	MAG74D	ETS74ND	ETS70D1N-ETS74DI	476420ES
OCTAVIA Combi 1.9 TDI 4x4	(1Z5)	11/04→		RUN72D	MAG74D	ETS74ND	ETS70D1N-ETS74DI	476420ES
OCTAVIA Combi 2.0 TDI 16V	(1Z5)	02/04→		RUN72D	MAG74D	ETS74ND	ETS70D1N-ETS74DI	476420ES
OCTAVIA Combi 2.0 TDI	(1Z5)	11/05→		RUN72D	MAG74D	ETS74ND	ETS70D1N-ETS74DI	476420ES
OCTAVIA Combi 2.0 TDI 16V	(1Z5)	02/04→		RUN72D	MAG74D	ETS74ND	ETS70D1N-ETS74DI	476420ES
OCTAVIA Combi 2.0 TDI 4x4	(1Z5)	07/06→		RUN72D	MAG74D	ETS74ND	ETS70D1N-ETS74DI	476420ES
OCTAVIA Combi 2.0 TDI	(1Z5)	04/06→		RUN72D	MAG74D	ETS74ND	ETS70D1N-ETS74DI	476420ES
PRAKTIK 1.2		03/07→		RUN50D	MAG50D	ETS50ND	ETS50D3N-ETS50D4N	
PRAKTIK 1.4		03/07→		RUN50D	MAG50D	ETS50ND	ETS50D3N-ETS50D4N	
PRAKTIK 1.4 TDI		03/07→		RUN62D				
PRAKTIK 1.4 TDI		03/07→		RUN62D				
ROOMSTER 1.2	(5J)	05/06→01/07		RUN50D	MAG50D	ETS50ND	ETS50D3N-ETS50D4N	
ROOMSTER 1.2	(5J)	01/07→		RUN50D	MAG50D	ETS50ND	ETS50D3N-ETS50D4N	
ROOMSTER 1.2 TSI	(5J)	03/10→		RUN50D	MAG50D	ETS50ND	ETS50D3N-ETS50D4N	
ROOMSTER 1.2 TSI	(5J)	03/10→		RUN50D	MAG50D	ETS50ND	ETS50D3N-ETS50D4N	
ROOMSTER 1.4	(5J)	09/06→		RUN62D	MAG62D	ETS62ND	ETS60D3N	438320ES
ROOMSTER 1.6	(5J)	09/06→		RUN62D	MAG62D	ETS62ND	ETS60D3N	438320ES
ROOMSTER 1.4 TDI	(5J)	07/06→		RUN62D	MAG62D	ETS62ND	ETS60D3N	438320ES
ROOMSTER 1.4 TDI	(5J)	09/06→		RUN62D	MAG62D	ETS62ND	ETS60D3N	438320ES
ROOMSTER 1.6 TDI	(5J)	03/10→		RUN72D	MAG74D	ETS74ND	ETS70D1N-ETS74DI	476420ES
ROOMSTER 1.6 TDI	(5J)	03/10→		RUN72D	MAG74D	ETS74ND	ETS70D1N-ETS74DI	476420ES
ROOMSTER 1.9 TDI	(5J)	09/06→		RUN72D	MAG74D	ETS74ND	ETS70D1N-ETS74DI	476420ES

	Design		START	RUN	MAGIS	ETS	ETS alternative	ES
SKODA								
SUPERB 1.8 T	(3U4)	02/02→03/08		RUN62D	MAG62D	ETS62ND	ETS60D3N	438320ES
SUPERB 2.0	(3U4)	02/02→03/08		RUN62D	MAG62D	ETS62ND	ETS60D3N	438320ES
SUPERB 2.0	(3U4)	02/06→03/08		RUN62D				
SUPERB 2.8 V6	(3U4)	02/02→03/08		RUN72D	MAG74D	ETS74ND	ETS70D1N-ETS74DI	476420ES
SUPERB 1.9 TDI	(3U4)	08/02→10/05		RUN72D	MAG74D	ETS74ND	ETS70D1N-ETS74DI	476420ES
SUPERB 1.9 TDI	(3U4)	10/05→05/07		RUN72D	MAG74D	ETS74ND	ETS70D1N-ETS74DI	476420ES
SUPERB 1.9 TDI	(3U4)	01/07→03/08		RUN72D	MAG74D	ETS74ND	ETS70D1N-ETS74DI	476420ES
SUPERB 1.9 TDI	(3U4)	02/02→03/08		RUN72D	MAG74D	ETS74ND	ETS70D1N-ETS74DI	476420ES
SUPERB 2.0 TDI	(3U4)	10/05→03/08		RUN72D	MAG74D	ETS74ND	ETS70D1N-ETS74DI	476420ES
SUPERB 2.5 TDI	(3U4)	02/02→08/03			MAG82D	ETS80ND		
SUPERB 2.5 TDI	(3U4)	06/03→03/08			MAG82D	ETS80ND		
SUPERB 1.4 TSI	(3T4)	07/08→		RUN50D	MAG50D	ETS50ND	ETS50D3N-ETS50D4N	
SUPERB 1.8 TSI	(3T4)	03/08→		RUN62D				
SUPERB 1.8 TSI 4x4	(3T4)	11/08→		RUN62D				
SUPERB 3.6 V6 4x4	(3T4)	11/08→		RUN72D	MAG74D	ETS74ND	ETS70D1N-ETS74DI	476420ES
SUPERB 1.9 TDI	(3T4)	03/08→		RUN72D	MAG74D	ETS74ND	ETS70D1N-ETS74DI	476420ES
SUPERB 2.0 TDI	(3T4)	03/08→		RUN72D	MAG74D	ETS74ND	ETS70D1N-ETS74DI	476420ES
SUPERB 2.0 TDI 16V	(3T4)	01/09→		RUN72D	MAG74D	ETS74ND	ETS70D1N-ETS74DI	476420ES
SUPERB 2.0 TDI	(3T4)	07/08→		RUN72D	MAG74D	ETS74ND	ETS70D1N-ETS74DI	476420ES
SUPERB 2.0 TDI 4x4	(3T4)	09/08→		RUN72D	MAG74D	ETS74ND	ETS70D1N-ETS74DI	476420ES
SUPERB Estate 1.4 TSI	(3T5)	10/09→		RUN62D				
SUPERB Estate 1.8 TSI	(3T5)	10/09→		RUN62D				
SUPERB Estate 1.8 TSI 4x4	(3T5)	10/09→		RUN62D				
SUPERB Estate 3.6 V6 4x4	(3T5)	10/09→		RUN72D	MAG74D	ETS74ND	ETS70D1N-ETS74DI	476420ES
YETI 1.2 TSI		09/09→		RUN50D	MAG50D	ETS50ND	ETS50D3N-ETS50D4N	
YETI 1.4 TSI		06/10→		RUN50D				
YETI 1.8 TSI 4x4		05/09→		RUN62D				
YETI 2.0 TDI		11/09→		RUN72D	MAG74D	ETS74ND	ETS70D1N-ETS74DI	476420ES
YETI 2.0 TDI 4x4		11/09→		RUN72D	MAG74D	ETS74ND	ETS70D1N-ETS74DI	476420ES
YETI 2.0 TDI 4x4		05/09→		RUN72D	MAG74D	ETS74ND	ETS70D1N-ETS74DI	476420ES
YETI 2.0 TDI 4x4		11/09→		RUN72D				
SMART								
CROSSBLADE 0.6		06/02→		RUN50D	MAG50D-MAG45D	ETS50ND-ETS45ND	ETS50D3N-ETS50D4N	436210ES
ROADSTER 0.7 (452.432)		04/03→		RUN50D	MAG50D-MAG45D	ETS50ND-ETS45ND	ETS50D3N-ETS50D4N	436210ES
ROADSTER 0.7 (452.434)		04/03→		RUN50D	MAG50D-MAG45D	ETS50ND-ETS45ND	ETS50D3N-ETS50D4N	436210ES
ROADSTER 0.7 Brabus (452.437)		12/03→		RUN50D	MAG50D-MAG45D	ETS50ND-ETS45ND	ETS50D3N-ETS50D4N	436210ES
ROADSTER Coupe 0.7 (452.332)		06/03→		RUN50D	MAG50D	ETS50ND	ETS50D3N-ETS50D4N	
ROADSTER Coupe 0.7 (452.334)		04/03→		RUN50D	MAG50D-MAG45D	ETS50ND-ETS45ND	ETS50D3N-ETS50D4N	436210ES
ROADSTER Coupe 0.7 Brabus (452.337)		12/03→		RUN50D	MAG50D-MAG45D	ETS50ND-ETS45ND	ETS50D3N-ETS50D4N	436210ES
CITY-COUPE 0.6 (S1CLB1)	(MC01)	07/98→01/04		RUN50D	MAG50D-MAG45D	ETS50ND-ETS45ND	ETS50D3N-ETS50D4N	436210ES
CITY-COUPE 0.6 (S1CLA1)	(MC01)	07/98→01/04		RUN50D	MAG50D-MAG45D	ETS50ND-ETS45ND	ETS50D3N-ETS50D4N	436210ES
CITY-COUPE 0.6	(MC01)	01/01→01/04		RUN50D	MAG50D-MAG45D	ETS50ND-ETS45ND	ETS50D3N-ETS50D4N	436210ES
CITY-COUPE 0.6	(MC01)	06/02→01/04		RUN50D	MAG50D-MAG45D	ETS50ND-ETS45ND	ETS50D3N-ETS50D4N	436210ES
CITY-COUPE 0.7	(MC01)	01/03→01/04		RUN50D	MAG50D-MAG45D	ETS50ND-ETS45ND	ETS50D3N-ETS50D4N	436210ES
CITY-COUPE 0.7	(MC01)	01/03→01/04		RUN50D	MAG50D-MAG45D	ETS50ND-ETS45ND	ETS50D3N-ETS50D4N	436210ES

	Design		START	RUN	MAGIS	ETS	ETS alternative	ES
SMART								
CITY-COUPE 0.7	(MC01)	01/03→01/04		RUN50D	MAG50D-MAG45D	ETS50ND-ETS45ND	ETS50D3N-ETS50D4N	436210ES
CITY-COUPE 0.8 CDI (S1CLC1)	(MC01)	11/99→01/04		RUN50D	MAG50D	ETS50ND	ETS50D3N-ETS50D4N	
CABRIO 0.6 (S1OLA1)		03/00→01/04		RUN50D	MAG50D-MAG45D	ETS50ND-ETS45ND	ETS50D3N-ETS50D4N	436210ES
CABRIO 0.6 (S1OLD2)		01/01→01/04		RUN50D	MAG50D-MAG45D	ETS50ND-ETS45ND	ETS50D3N-ETS50D4N	436210ES
CABRIO 0.6		06/02→01/04		RUN50D	MAG50D-MAG45D	ETS50ND-ETS45ND	ETS50D3N-ETS50D4N	436210ES
CABRIO 0.7		01/03→01/04		RUN50D	MAG50D-MAG45D	ETS50ND-ETS45ND	ETS50D3N-ETS50D4N	436210ES
CABRIO 0.7		01/03→01/04		RUN50D	MAG50D-MAG45D	ETS50ND-ETS45ND	ETS50D3N-ETS50D4N	436210ES
CABRIO 0.8 CDI (S1OLC1)		03/01→01/04		RUN62D	MAG62D	ETS62ND	ETS60D3N	438320ES
FORTWO Coupe 0.7 (450.330)		01/04→		RUN50D	MAG50D-MAG45D	ETS50ND-ETS45ND	ETS50D3N-ETS50D4N	436210ES
FORTWO Coupe 0.7 (450.332)		01/04→		RUN50D	MAG50D-MAG45D	ETS50ND-ETS45ND	ETS50D3N-ETS50D4N	436210ES
FORTWO Coupe 0.7 (450.333)		01/04→		RUN50D	MAG50D-MAG45D	ETS50ND-ETS45ND	ETS50D3N-ETS50D4N	436210ES
FORTWO Coupe 0.8 CDI (450.300)		01/04→		RUN62D	MAG62D	ETS62ND	ETS60D3N	438320ES
FORTWO Cabrio 0.7 (450.432)		01/04→		RUN50D	MAG50D-MAG45D	ETS50ND-ETS45ND	ETS50D3N-ETS50D4N	436210ES
FORTWO Cabrio 0.7 (450.433)		01/04→		RUN50D	MAG50D-MAG45D	ETS50ND-ETS45ND	ETS50D3N-ETS50D4N	436210ES
FORTWO Cabrio 0.8 CDI (450.400)		01/04→		RUN62D	MAG62D	ETS62ND	ETS60D3N	438320ES
FORTWO Coupe 1.0 (451.330)		01/07→		RUN50D	MAG50D	ETS50ND	ETS50D3N-ETS50D4N	
FORTWO Coupe 1.0 (451.331)		01/07→		RUN50D	MAG50D	ETS50ND	ETS50D3N-ETS50D4N	
FORTWO Coupe 1.0 Turbo (451.332)		01/07→		RUN50D	MAG50D	ETS50ND	ETS50D3N-ETS50D4N	
FORTWO Coupe 1.0 Brabus (451.333)		01/08→		RUN50D	MAG50D	ETS50ND	ETS50D3N-ETS50D4N	
FORTWO Coupe 0.8 CDi (451.300)		01/07→		RUN62D	MAG62D	ETS62ND	ETS60D3N	438320ES
FORTWO Coupe 0.8 CDi		08/09→		RUN62D				
FORTWO Cabrio 1.0 (451.431)	Stop/Start , H	01/07→	AGM70D	RUN50D	MAG50D	ETS50ND	ETS50D3N-ETS50D4N	
FORTWO Cabrio 1.0 Turbo (451.432)		01/07→		RUN50D	MAG50D	ETS50ND	ETS50D3N-ETS50D4N	
FORTWO Cabrio 0.8 CDi (451.400)		01/07→		RUN62D	MAG62D	ETS62ND	ETS60D3N	438320ES
FORTWO Cabrio 0.8 CDi		08/09→		RUN62D				
FORTWO Cabrio 1.0 Brabus (451.433)		01/08→		RUN50D	MAG50D	ETS50ND	ETS50D3N-ETS50D4N	
FORFOUR 1.1		02/05→		RUN50D	MAG50D-MAG45D	ETS50ND-ETS45ND	ETS50D3N-ETS50D4N	436210ES
FORFOUR 1.1 (454.030)		01/04→		RUN50D	MAG50D-MAG45D	ETS50ND-ETS45ND	ETS50D3N-ETS50D4N	436210ES
FORFOUR 1.3 (454.031)		01/04→		RUN50D	MAG50D-MAG45D	ETS50ND-ETS45ND	ETS50D3N-ETS50D4N	436210ES
FORFOUR 1.5 (454.032)		01/04→		RUN50D	MAG50D-MAG45D	ETS50ND-ETS45ND	ETS50D3N-ETS50D4N	436210ES
FORFOUR 1.5		01/04→		RUN50D	MAG50D	ETS50ND	ETS50D3N-ETS50D4N	
FORFOUR 1.5 BRABUS (454.034)		05/05→		RUN50D	MAG50D-MAG45D	ETS50ND-ETS45ND	ETS50D3N-ETS50D4N	436210ES
FORFOUR 1.5 CDI (454.000)		09/04→		RUN72D	MAG74D	ETS74ND	ETS70D1N-ETS74DI	476420ES
FORFOUR 1.5 CDI (454.001)		09/04→		RUN72D	MAG74D	ETS74ND	ETS70D1N-ETS74DI	476420ES
SUBARU								
JUSTY I 1200 4WD	(KAD)	10/90→12/94						ES45300DJ
JUSTY II 1.3 GX 4x4	(JMA, MS)	10/95→11/03						ES45300DJ
JUSTY II 1.3 4x4	(JMA, MS)	04/01→11/03						ES45300DJ
JUSTY III 1.3	(G3X)	09/03→						ES45300DJ
JUSTY III 1.5	(G3X)	09/03→						ES45300DJ
JUSTY IV 1.0		01/07→						ES45300DJ
LIBERO Bus 1.2 i 4WD (E12, FA)	(E10, E12)	08/91→02/00						ES45300DJ
REX III 0.7		07/90→03/92						ES45300DJ
REX III 0.7 4WD		07/90→03/92						ES45300DJ
REX III 0.7		07/90→02/92						ES45300DJ
REX III 0.7 Kompressor 4WD		07/90→02/92						ES45300DJ

	Design		START	RUN	MAGIS	ETS	ETS alternative	ES
SUBARU								
VIVIO 0.7		08/92→12/98						ES35240DJ
VIVIO 660 4WD		03/92→10/95						ES35240DJ
SUZUKI								
ALTO IV 1.1	(FF)	06/02→						ES35240DJ
ALTO V 1.0	(GF)	01/09→						ES35240SJ
BALENO Hatchback 1.3	(EG)	09/96→05/02						ES35240SJ
BALENO Hatchback 1.3 i 16V	(EG)	07/95→05/02						ES35240SJ
BALENO Hatchback 1.6 i 16V	(EG)	07/95→05/02						ES35240SJ
BALENO Hatchback 1.6 i 16V 4x4	(EG)	07/95→05/02						ES35240SJ
BALENO 1.3	(EG)	09/96→05/02						ES35240SJ
BALENO 1.3 i 16V	(EG)	07/95→05/02						ES35240SJ
BALENO 1.6 i 16V	(EG)	07/95→05/02						ES35240SJ
BALENO 1.6 i 16V 4x4	(EG)	07/95→05/02						ES35240SJ
BALENO Estate 1.6 i 16V	(EG)	08/96→05/02						ES45300DJ
BALENO Estate 1.6 i 16V 4x4	(EG)	08/96→05/02						ES45300DJ
BALENO Estate 1.6 i 16V	(EG)	08/96→05/02						ES45300DJ
BALENO Estate 1.6 i 16V 4x4	(EG)	08/96→05/02						ES45300DJ
SUPER CARRY Bus 1.0	(ED)	09/94→03/99						ES35240SJ
SUPER CARRY Bus 1.0	(ED)	10/92→03/99						ES35240SJ
CARRY Box 1.3	(FD)	03/99→						ES35240SJ
CARRY Box 1.3 16 V	(FD)	03/00→						ES35240SJ
GRAND VITARA 2.0 TDI SW		06-98→			MAG100D	ETS100ND-ETS100KD	ETS100D2N-ETSD1N	
IGNIS 1.3	(FH)	10/00→09/03			MAG44DB	ETS44NDB		ES45NDB
IGNIS 1.3 4WD	(FH)	10/00→09/03			MAG44DB	ETS44NDB		ES45NDB
IGNIS II 1.3		09/03→			MAG44DB	ETS44NDB		ES45NDB
IGNIS II 1.3 4x4		09/03→			MAG44DB	ETS44NDB		ES45NDB
IGNIS II 1.5		09/03→			MAG44DB	ETS44NDB		ES45NDB
IGNIS II 1.5 4x4		09/03→			MAG44DB	ETS44NDB		ES45NDB
IGNIS II 1.5 Sport		12/03→			MAG44DB	ETS44NDB		ES45NDB
IGNIS II 1.3 DDiS		09/03→			MAG62DB	ETS60NDB-ETS50NDB		ES60NDB
JIMNY 1.3 16V	(FJ)	09/98→						ES45300SJ
JIMNY 1.3 16V 4WD	(FJ)	09/98→						ES45300SJ
JIMNY 1.3 16V	(FJ)	02/01→						ES45300SJ
JIMNY 1.3 16V 4WD	(FJ)	02/01→						ES45300SJ
LIANA 1.3	(ER)	03/02→						ES45300SJ
LIANA 1.6	(ER)	03/02→						ES45300SJ
LIANA 1.6	(ER)	04/02→						ES45300SJ
LIANA 1.6	(ER)	01/05→						ES45300SJ
LIANA Estate 1.3	(ER)	07/01→						ES45300SJ
LIANA Estate 1.6	(ER)	07/01→						ES45300SJ
LIANA Estate 1.6	(ER)	04/02→						ES45300SJ
LIANA Estate 1.6	(ER)	01/05→						ES45300SJ
SAMURAI 1.3	(SJ)	01/00→						ES35240SJ
SPLASH 1.0		01/08→			MAG44DB	ETS44NDB		ES45NDB
SPLASH 1.2		01/08→			MAG44DB	ETS44NDB		ES45NDB
SPLASH 1.3 CDTI		01/08→			MAG72DB	ETS71NDB		

	Design		START	RUN	MAGIS	ETS	ETS alternative	ES
SUZUKI								
SX4 1.5	(GY)	06/06→						ES45300D
SX4 1.6 VVT	(GY)	06/06→						ES45300D
SX4 1.6 VVT	(GY)	07/09→						ES45300D
SX4 1.6 VVT 4x4	(GY)	06/06→						ES45300D
SX4 1.6 VVT 4x4	(GY)	07/09→						ES45300D
SX4 1.6 DDIS	(GY)	04/07→		RUN72D	MAG74D	ETS74ND	ETS70D1N-ETS74DI	476420ES
SX4 1.9 DDiS	(GY)	06/06→		RUN72D	MAG74D	ETS74ND	ETS70D1N-ETS74DI	476420ES
SX4 1.9 DDiS 4x4	(GY)	06/06→		RUN72D	MAG74D	ETS74ND	ETS70D1N-ETS74DI	476420ES
SX4 2.0 DDiS	(GY)	07/09→		RUN72D	MAG74D	ETS74ND	ETS70D1N-ETS74DI	476420ES
SX4 2.0 DDiS 4x4	(GY)	07/09→		RUN72D	MAG74D	ETS74ND	ETS70D1N-ETS74DI	476420ES
SX4 Saloon 1.6		10/07→						ES45300D
SX4 Saloon 1.6		10/07→						ES45300D
SX4 Saloon 1.6		10/07→						ES45300D
SX4 Saloon 2.0		10/07→						ES45300D
SWIFT II Hatchback 1.0 i (SF310, AA44)	(EA, MA)	09/91→05/01						ES35240SJ
SWIFT II Hatchback 1.3	(EA, MA)	06/01→12/03						ES35240SJ
SWIFT II 1.6 i (SF416, AH14)	(AH, AJ)	01/90→05/01						ES45300SJ
SWIFT II 1.6 i 4WD (SF416, AJ14)	(AH, AJ)	01/90→05/01						ES45300SJ
SWIFT Convertible 1.3 (SF413, AK35)	(SF413)	09/91→10/96						ES35240SJ
SWIFT III 1.3 4x4	(SG)	01/06→			MAG44DB	ETS44NDB		ES45NDB
SWIFT III 1.3	(SG)	02/05→			MAG44DB	ETS44NDB		ES45NDB
SWIFT III 1.3 4x4	(SG)	02/05→			MAG44DB	ETS44NDB		ES45NDB
SWIFT III 1.5 4x4	(SG)	02/05→			MAG44DB	ETS44NDB		ES45NDB
SWIFT III 1.5	(SG)	02/05→			MAG44DB	ETS44NDB		ES45NDB
SWIFT III 1.6	(SG)	05/06→			MAG44DB	ETS44NDB		ES45NDB
SWIFT III 1.3 DDiS	(SG)	08/05→			MAG62DB	ETS60NDB-ETS50NDB		ES60NDB
SWIFT III 1.3 DDiS	(SG)	08/05→			MAG62DB	ETS60NDB-ETS50NDB		ES60NDB
VITARA 1.6 16V (ET)	(ET, TA)	07/90→03/98						ES35240SJ
VITARA Cabrio 1.6 i 16V (TA02)	(ET, TA)	07/90→03/99						ES35240SJ
WAGON R+ 1.0	(EM)	02/98→05/00						ES35240DJ
WAGON R+ 1.2	(EM)	02/98→05/00						ES45300DJ
WAGON R+ 1.2 4WD	(EM)	02/98→05/00						ES45300DJ
WAGON R+ 1.3	(MM)	05/00→			MAG44DB	ETS44NDB		ES45NDB
WAGON R+ 1.3 4WD	(MM)	10/01→			MAG44DB	ETS44NDB		ES45NDB
WAGON R+ 1.3	(MM)	08/01→			MAG44DB	ETS44NDB		ES45NDB
WAGON R+ 1.3	(MM)	09/03→			MAG44DB	ETS44NDB		ES45NDB
WAGON R+ 1.3 4WD	(MM)	09/03→			MAG44DB	ETS44NDB		ES45NDB
WAGON R+ 1.3 DDiS	(MM)	09/03→			MAG72DB	ETS71NDB		
WAGON R 1.0		07/03→08/05			MAG44DB	ETS44NDB		ES45NDB
X-90 1.6 i 16V 4x4	(EL)	09/95→						ES45300SJ
X-90 1.6 i 16V	(EL)	09/95→						ES45300SJ
TOYOTA								
AURIS 1.4 VVTi		03/07→		RUN50D	MAG50D	ETS50ND	ETS50D3N-ETS50D4N	
AURIS 1.6 VVTi		03/07→		RUN50D	MAG50D	ETS50ND	ETS50D3N-ETS50D4N	
AURIS 1.6		05/09→		RUN50D	MAG50D	ETS50ND	ETS50D3N-ETS50D4N	
AURIS 1.8 VVTi		10/06→		RUN62D	MAG62D	ETS62ND	ETS60D3N	438320ES

	Design		START	RUN	MAGIS	ETS	ETS alternative	ES
TOYOTA								
AURIS 1.8		02/09→		RUN62D	MAG62D	ETS62ND	ETS60D3N	438320ES
AURIS 1.4 D-4D		03/07→		RUN62D	MAG62D	ETS62ND	ETS60D3N	438320ES
AURIS 2.0 D-4D		03/07→		RUN72D	MAG74D	ETS74ND	ETS70D1N-ETS74DI	476420ES
AURIS 2.2 D		03/07→		RUN72D	MAG74D	ETS74ND	ETS70D1N-ETS74DI	476420ES
AURIS 1.33 Dual.VVTi	Stop/Start , A	05/09→	SST63D					
AVENSIS Liftback 1.6 (AT220_)	(_T22_)	09/97→10/00		RUN62D	MAG62D	ETS62ND	ETS60D3N	438320ES
AVENSIS Liftback 1.6 (AT220_)	(_T22_)	09/97→10/00		RUN62D	MAG62D	ETS62ND	ETS60D3N	438320ES
AVENSIS Liftback 1.6 VVT-i	(_T22_)	10/00→02/03		RUN62D	MAG62D	ETS62ND	ETS60D3N	438320ES
AVENSIS Liftback 1.8 (AT221_)	(_T22_)	09/97→10/00		RUN62D	MAG62D	ETS62ND	ETS60D3N	438320ES
AVENSIS Liftback 1.8 VVT-i	(_T22_)	10/00→02/03		RUN62D	MAG62D	ETS62ND	ETS60D3N	438320ES
AVENSIS Liftback 2.0 (ST220_)	(_T22_)	09/97→10/00		RUN62D	MAG62D	ETS62ND	ETS60D3N	438320ES
AVENSIS Liftback 2.0 VVT-i	(_T22_)	10/00→02/03		RUN62D	MAG62D	ETS62ND	ETS60D3N	438320ES
AVENSIS Liftback 1.9 D	(_T22_)	09/02→02/03		RUN72D	MAG74D	ETS74ND	ETS70D1N-ETS74DI	476420ES
AVENSIS Liftback 2.0 D	(_T22_)	10/97→05/98		RUN72D	MAG74D	ETS74ND	ETS70D1N-ETS74DI	476420ES
AVENSIS Liftback 2.0 TD (CT220_)	(_T22_)	09/97→02/03		RUN72D	MAG74D	ETS74ND	ETS70D1N-ETS74DI	476420ES
AVENSIS Liftback 2.0 D-4D (CDT220_)	(_T22_)	10/99→02/03		RUN72D	MAG74D	ETS74ND	ETS70D1N-ETS74DI	476420ES
AVENSIS 1.6 (AT220_)	(_T22_)	09/97→10/00		RUN62D	MAG62D	ETS62ND	ETS60D3N	438320ES
AVENSIS 1.6 (AT220_)	(_T22_)	09/97→10/00		RUN62D	MAG62D	ETS62ND	ETS60D3N	438320ES
AVENSIS 1.6 VVT-i	(_T22_)	10/00→02/03		RUN62D	MAG62D	ETS62ND	ETS60D3N	438320ES
AVENSIS 1.8 (AT221_)	(_T22_)	09/97→10/00		RUN62D	MAG62D	ETS62ND	ETS60D3N	438320ES
AVENSIS 1.8 VVT-i	(_T22_)	10/00→02/03		RUN62D	MAG62D	ETS62ND	ETS60D3N	438320ES
AVENSIS 1.9 D	(_T22_)	09/02→02/03		RUN72D	MAG74D	ETS74ND	ETS70D1N-ETS74DI	476420ES
AVENSIS 2.0 D	(_T22_)	10/97→05/98		RUN72D	MAG74D	ETS74ND	ETS70D1N-ETS74DI	476420ES
AVENSIS 2.0 (ST220_)	(_T22_)	09/97→10/00		RUN62D	MAG62D	ETS62ND	ETS60D3N	438320ES
AVENSIS 2.0 VVT-i	(_T22_)	10/00→02/03		RUN62D	MAG62D	ETS62ND	ETS60D3N	438320ES
AVENSIS 2.0 TD (CT220_)	(_T22_)	09/97→02/03		RUN72D	MAG74D	ETS74ND	ETS70D1N-ETS74DI	476420ES
AVENSIS 2.0 D-4D (CDT220_)	(_T22_)	10/99→02/03		RUN72D	MAG74D	ETS74ND	ETS70D1N-ETS74DI	476420ES
AVENSIS Station Wagon 1.6 (AT220_)	(_T22_)	09/97→10/00		RUN62D	MAG62D	ETS62ND	ETS60D3N	438320ES
AVENSIS Station Wagon 1.6 (AT220_)	(_T22_)	09/97→10/00		RUN62D	MAG62D	ETS62ND	ETS60D3N	438320ES
AVENSIS Station Wagon 1.6 VVT-i	(_T22_)	10/00→02/03		RUN62D	MAG62D	ETS62ND	ETS60D3N	438320ES
AVENSIS Station Wagon 1.8 (AT221_)	(_T22_)	09/97→10/00		RUN62D	MAG62D	ETS62ND	ETS60D3N	438320ES
AVENSIS Station Wagon 1.8 VVT-i	(_T22_)	10/00→02/03		RUN62D	MAG62D	ETS62ND	ETS60D3N	438320ES
AVENSIS Station Wagon 2.0 (ST220_)	(_T22_)	09/97→10/00		RUN62D	MAG62D	ETS62ND	ETS60D3N	438320ES
AVENSIS Station Wagon 2.0 VVT-i	(_T22_)	10/00→02/03		RUN62D	MAG62D	ETS62ND	ETS60D3N	438320ES
AVENSIS Station Wagon 2.0 TD (CT220_)	(_T22_)	09/97→02/03		RUN72D	MAG74D	ETS74ND	ETS70D1N-ETS74DI	476420ES
AVENSIS Station Wagon 2.0 D-4D (CDT220_)	(_T22_)	10/99→02/03		RUN72D	MAG74D	ETS74ND	ETS70D1N-ETS74DI	476420ES
AVENSIS Station Wagon 1.9 D	(_T22_)	09/02→02/03		RUN72D	MAG74D	ETS74ND	ETS70D1N-ETS74DI	476420ES
AVENSIS Station Wagon 1.9 D	(_T22_)	10/97→05/98		RUN72D	MAG74D	ETS74ND	ETS70D1N-ETS74DI	476420ES
AVENSIS VERSO 2.0 VVT-i	(AC_)	08/01→		RUN62D	MAG62D	ETS62ND	ETS60D3N	438320ES
AVENSIS VERSO 2.0 D-4D	(AC_)	08/01→		RUN72D	MAG74D	ETS74ND	ETS70D1N-ETS74DI	476420ES
AVENSIS 1.6 VVT-i	(T25)	04/03→		RUN62D	MAG62D	ETS62ND	ETS60D3N	438320ES
AVENSIS 1.8	(T25)	04/03→		RUN62D	MAG62D	ETS62ND	ETS60D3N	438320ES
AVENSIS 2.0	(T25)	04/03→		RUN62D	MAG62D	ETS62ND	ETS60D3N	438320ES
AVENSIS 2.4	(T25)	10/03→		RUN62D	MAG62D	ETS62ND	ETS60D3N	438320ES
AVENSIS 2.4	(T25)	09/03→		RUN62D	MAG62D	ETS62ND	ETS60D3N	438320ES

	Design		START	RUN	MAGIS	ETS	ETS alternative	ES
TOYOTA								
AVENSIS 2.0 VVTi	(T25)	03/03→		RUN62D	MAG62D	ETS62ND	ETS60D3N	438320ES
AVENSIS 2.0 D-4D	(T25)	04/03→		RUN72D	MAG74D	ETS74ND	ETS70D1N-ETS74DI	476420ES
AVENSIS 2.0 D-4D	(T25)	03/06→		RUN72D	MAG74D	ETS74ND	ETS70D1N-ETS74DI	476420ES
AVENSIS Saloon 1.6 VVT-i	(T25)	04/03→		RUN62D	MAG62D	ETS62ND	ETS60D3N	438320ES
AVENSIS Saloon 1.8	(T25)	04/03→		RUN62D	MAG62D	ETS62ND	ETS60D3N	438320ES
AVENSIS Saloon 2.0	(T25)	04/03→		RUN62D	MAG62D	ETS62ND	ETS60D3N	438320ES
AVENSIS Saloon 2.4	(T25)	10/03→		RUN62D	MAG62D	ETS62ND	ETS60D3N	438320ES
AVENSIS Saloon 2.4	(T25)	09/03→		RUN62D	MAG62D	ETS62ND	ETS60D3N	438320ES
AVENSIS Saloon 2.0 VVTi	(T25)	03/03→		RUN62D	MAG62D	ETS62ND	ETS60D3N	438320ES
AVENSIS Saloon 2.0 D-4D	(T25)	04/03→		RUN72D	MAG74D	ETS74ND	ETS70D1N-ETS74DI	476420ES
AVENSIS Saloon 2.0 D-4D	(T25)	03/06→		RUN72D	MAG74D	ETS74ND	ETS70D1N-ETS74DI	476420ES
AVENSIS Estate 1.6 VVT-i	(T25)	04/03→		RUN62D	MAG62D	ETS62ND	ETS60D3N	438320ES
AVENSIS Estate 1.8	(T25)	04/03→		RUN62D	MAG62D	ETS62ND	ETS60D3N	438320ES
AVENSIS Estate 2.0	(T25)	04/03→		RUN62D	MAG62D	ETS62ND	ETS60D3N	438320ES
AVENSIS Estate 2.4	(T25)	10/03→		RUN62D	MAG62D	ETS62ND	ETS60D3N	438320ES
AVENSIS Estate 2.4	(T25)	09/03→		RUN62D	MAG62D	ETS62ND	ETS60D3N	438320ES
AVENSIS Estate 2.0 D-4D	(T25)	04/03→		RUN72D	MAG74D	ETS74ND	ETS70D1N-ETS74DI	476420ES
AVENSIS Estate 2.0 D-4D	(T25)	03/06→		RUN72D	MAG74D	ETS74ND	ETS70D1N-ETS74DI	476420ES
AVENSIS Saloon 1.6	(T27)	02/09→		RUN62D	MAG62D	ETS62ND	ETS60D3N	438320ES
AVENSIS Saloon 1.8	(T27)	02/09→		RUN62D	MAG62D	ETS62ND	ETS60D3N	438320ES
AVENSIS Saloon 2.0	(T27)	02/09→		RUN62D	MAG62D	ETS62ND	ETS60D3N	438320ES
AVENSIS Saloon 2.0 D	(T27)	02/09→		RUN72D	MAG74D	ETS74ND	ETS70D1N-ETS74DI	476420ES
AVENSIS Estate 1.6	(T27)	02/09→		RUN62D	MAG62D	ETS62ND	ETS60D3N	438320ES
AVENSIS Estate 1.8	(T27)	02/09→		RUN62D	MAG62D	ETS62ND	ETS60D3N	438320ES
AVENSIS Estate 2.0	(T27)	02/09→		RUN62D	MAG62D	ETS62ND	ETS60D3N	438320ES
AVENSIS Estate 2.0 D	(T27)	02/09→		RUN72D	MAG74D	ETS74ND	ETS70D1N-ETS74DI	476420ES
AYGO 1.0	(B10)	07/05→		RUN44D			ETS44D2N	
AYGO 1.4 HDi	(B10)	07/05→		RUN62D	MAG62D	ETS62ND	ETS60D3N	438320ES
CARINA E 2.0 GLI (ST191)	(_T19_)	04/92→09/97		RUN72D	MAG74D	ETS74ND	ETS70D1N-ETS74DI	476420ES
CARINA E 2.0 GTi (ST191)	(_T19_)	04/92→02/94		RUN72D	MAG74D	ETS74ND	ETS70D1N-ETS74DI	476420ES
CARINA E 2.0 GTi 16V (ST191_)	(_T19_)	03/94→09/97		RUN72D	MAG74D	ETS74ND	ETS70D1N-ETS74DI	476420ES
CARINA E 2.0 D (CT190)	(_T19_)	04/92→01/96		RUN72D	MAG74D	ETS74ND	ETS70D1N-ETS74DI	476420ES
CARINA E 2.0 TD (CT190)	(_T19_)	01/96→09/97		RUN72D	MAG74D	ETS74ND	ETS70D1N-ETS74DI	476420ES
CARINA E Saloon 2.0 (ST191)	(_T19_)	01/93→09/97		RUN72D	MAG74D	ETS74ND	ETS70D1N-ETS74DI	476420ES
CARINA E Saloon 2.0 GTi (ST191_)	(_T19_)	04/92→02/94		RUN72D	MAG74D	ETS74ND	ETS70D1N-ETS74DI	476420ES
CARINA E Saloon 2.0 GTi 16V (ST191_)	(_T19_)	03/94→09/97		RUN72D	MAG74D	ETS74ND	ETS70D1N-ETS74DI	476420ES
CARINA E Saloon 2.0 D (CT190)	(_T19_)	08/92→01/96		RUN72D	MAG74D	ETS74ND	ETS70D1N-ETS74DI	476420ES
CARINA E Saloon 2.0 TD (CT190_)	(_T19_)	01/96→09/97		RUN72D	MAG74D	ETS74ND	ETS70D1N-ETS74DI	476420ES
CARINA E Sportswagon 2.0 GLI (ST191_)	(_T19_)	01/93→09/97		RUN72D	MAG74D	ETS74ND	ETS70D1N-ETS74DI	476420ES
CARINA E Sportswagon 2.0 D (CT190_)	(_T19_)	01/93→01/96		RUN72D	MAG74D	ETS74ND	ETS70D1N-ETS74DI	476420ES
CARINA E Sportswagon 2.0 TD (CT190_)	(_T19_)	01/96→09/97		RUN72D	MAG74D	ETS74ND	ETS70D1N-ETS74DI	476420ES
COROLLA Compact 1.3 12V (EE100_)	(_E10_)	07/92→05/95						ES45300DJ
COROLLA Compact 1.3 XLI (EE101_)	(_E10_)	09/95→04/97						ES45300DJ
COROLLA Compact 1.3 XLI 16V (EE101)	(_E10_)	07/92→09/95						ES45300DJ
COROLLA Liftback 1.3 12V (EE100_)	(_E10_)	07/92→05/95						ES45300DJ
COROLLA Liftback 1.3 XLI (EE101_)	(_E10_)	07/92→04/97						ES45300DJ

	Design		START	RUN	MAGIS	ETS	ETS alternative	ES
TOYOTA								
COROLLA 1.3 12V (EE100_)	(_E10_)	07/92→04/97						ES45300DJ
COROLLA 1.3 XLI (EE101_)	(_E10_)	09/95→04/97						ES45300DJ
COROLLA 1.3 XLI 16V (EE101)	(_E10_)	07/92→09/95						ES45300DJ
COROLLA Wagon 1.3 12V (EE100_)	(_E10_)	07/92→05/95						ES45300DJ
COROLLA Wagon 1.3 XLI (EE101_)	(_E10_)	09/95→04/97						ES45300DJ
COROLLA Wagon 1.3 XLI 16V (EE101_)	(_E10_)	07/92→09/95						ES45300DJ
COROLLA 1.4 VVT-i	(_E12U_, _E12J_)	01/02→		RUN62D	MAG62D	ETS62ND	ETS60D3N	438320ES
COROLLA 1.6 VVT-i	(_E12U_, _E12J_)	01/02→		RUN62D	MAG62D	ETS62ND	ETS60D3N	438320ES
COROLLA 1.6 VVTi	(_E12U_, _E12J_)	10/06→		RUN62D	MAG62D	ETS62ND	ETS60D3N	438320ES
COROLLA 1.8 VVTL-i TS	(_E12U_, _E12J_)	01/02→		RUN62D	MAG62D	ETS62ND	ETS60D3N	438320ES
COROLLA 1.8 VVTL-i TS	(_E12U_, _E12J_)	02/05→		RUN62D	MAG62D	ETS62ND	ETS60D3N	438320ES
COROLLA 1.4 D	(_E12U_, _E12J_)	07/04→		RUN72D	MAG74D	ETS74ND	ETS70D1N-ETS74DI	476420ES
COROLLA 2.0 D-4D	(_E12U_, _E12J_)	01/02→		RUN72D	MAG74D	ETS74ND	ETS70D1N-ETS74DI	476420ES
COROLLA 2.0 D-4D	(_E12U_, _E12J_)	01/02→		RUN72D	MAG74D	ETS74ND	ETS70D1N-ETS74DI	476420ES
COROLLA 2.0 D-4D	(_E12U_, _E12J_)	05/03→		RUN72D	MAG74D	ETS74ND	ETS70D1N-ETS74DI	476420ES
COROLLA 2.2 D4d	(_E12U_, _E12J_)	11/06→		RUN72D	MAG74D	ETS74ND	ETS70D1N-ETS74DI	476420ES
COROLLA Estate 1.4 VVT-i	(_E12J_, _E12T_)	01/02→		RUN62D	MAG62D	ETS62ND	ETS60D3N	438320ES
COROLLA Estate 1.6 VVT-i	(_E12J_, _E12T_)	01/02→		RUN62D	MAG62D	ETS62ND	ETS60D3N	438320ES
COROLLA Estate 1.4 D	(_E12J_, _E12T_)	07/04→		RUN72D	MAG74D	ETS74ND	ETS70D1N-ETS74DI	476420ES
COROLLA Estate 2.0 D-4D	(_E12J_, _E12T_)	01/02→		RUN72D	MAG74D	ETS74ND	ETS70D1N-ETS74DI	476420ES
COROLLA Estate 2.0 D-4D	(_E12J_, _E12T_)	04/04→		RUN72D	MAG74D	ETS74ND	ETS70D1N-ETS74DI	476420ES
COROLLA Saloon 1.4 VVT-i	(_E12J_, _E12T_)	08/02→		RUN62D	MAG62D	ETS62ND	ETS60D3N	438320ES
COROLLA Saloon 1.5	(_E12J_, _E12T_)	06/07→		RUN62D				
COROLLA Saloon 1.6 VVT-i	(_E12J_, _E12T_)	08/02→		RUN62D	MAG62D	ETS62ND	ETS60D3N	438320ES
COROLLA Saloon 1.6	(_E12J_, _E12T_)	11/06→		RUN62D	MAG62D	ETS62ND	ETS60D3N	438320ES
COROLLA Saloon 1.8 4x4	(_E12J_, _E12T_)	06/07→		RUN62D				
COROLLA Saloon 1.4 D	(_E12J_, _E12T_)	07/04→		RUN72D	MAG74D	ETS74ND	ETS70D1N-ETS74DI	476420ES
COROLLA Saloon 2.0 D-4D	(_E12J_, _E12T_)	08/02→		RUN72D	MAG74D	ETS74ND	ETS70D1N-ETS74DI	476420ES
COROLLA Saloon 2.0 D4d	(_E12J_, _E12T_)	06/04→		RUN72D	MAG74D	ETS74ND	ETS70D1N-ETS74DI	476420ES
COROLLA Saloon 2.2 D4d	(_E12J_, _E12T_)	11/06→		RUN72D	MAG74D	ETS74ND	ETS70D1N-ETS74DI	476420ES
COROLLA Saloon 1.33		10/08→		RUN50D	MAG50D	ETS50ND	ETS50D3N-ETS50D4N	
COROLLA Saloon 1.6 Dual VVTi		01/07→		RUN62D	MAG62D	ETS62ND	ETS60D3N	438320ES
COROLLA Saloon 1.6		01/09→		RUN62D	MAG62D	ETS62ND	ETS60D3N	438320ES
COROLLA Saloon 1.4 D-4D		01/09→		RUN72D	MAG74D	ETS74ND	ETS70D1N-ETS74DI	476420ES
COROLLA Saloon 2.0 D-4D		01/07→		RUN72D	MAG74D	ETS74ND	ETS70D1N-ETS74DI	476420ES
COROLLA Verso 1.4 VVT-i	(_E12J_)	01/02→05/04		RUN62D	MAG62D	ETS62ND	ETS60D3N	438320ES
COROLLA Verso 1.6 VVT-i	(_E12J_)	01/02→05/04		RUN62D	MAG62D	ETS62ND	ETS60D3N	438320ES
COROLLA Verso 1.8 VVT-i	(_E12J_)	01/02→05/04		RUN62D	MAG62D	ETS62ND	ETS60D3N	438320ES
COROLLA Verso 2.0 D-4D	(_E12J_)	01/02→05/04		RUN72D	MAG74D	ETS74ND	ETS70D1N-ETS74DI	476420ES
COROLLA Verso 1.6	(ZER_, ZZE_)	04/04→		RUN62D	MAG62D	ETS62ND	ETS60D3N	438320ES
COROLLA Verso 1.8	(ZER_, ZZE_)	04/04→		RUN62D	MAG62D	ETS62ND	ETS60D3N	438320ES
COROLLA Verso 1.4 D4d	(ZER_, ZZE_)	03/04→		RUN62D	MAG62D	ETS62ND	ETS60D3N	438320ES
COROLLA Verso 2.0 D-4D	(ZER_, ZZE_)	04/04→		RUN72D	MAG74D	ETS74ND	ETS70D1N-ETS74DI	476420ES
COROLLA Verso 2.2 D-4D	(ZER_, ZZE_)	10/05→		RUN72D	MAG74D	ETS74ND	ETS70D1N-ETS74DI	476420ES
HIACE IV Wagon 2.4 D		07-99→			MAG100D	ETS100ND-ETS100KD	ETS100D2N-ETSD1N	
IQ 1.0	(AJ1)	01/09→						ES45300DJ
LAND CRUISER 4.7 V8 (UZJ200)	(J20)	01/08→						ES70540D

	Design		START	RUN	MAGIS	ETS	ETS alternative	ES
TOYOTA								
LAND CRUISER 3.0 D-4D		01-07→			MAG100D	ETS100ND-ETS100KD	ETS100D2N-ETSD1N	
LAND CRUISER 3.0 TDI D (4D)		10-00→						ES100720S
LAND CRUISER 4.2 TD 24V		07-98→						ES100720S
PREVIA 2.0 D-4D		03-01→			MAG100D	ETS100ND-ETS100KD	ETS100D2N-ETSD1N	
PREVIA 2.0 TDI D (4D)		05-01→			MAG100D	ETS100ND-ETS100KD	ETS100D2N-ETSD1N	
PRIUS Saloon 1.5	(NHW11_)	05/00→01/04						ES35240DJ
PRIUS Hatchback 1.5		08/03→						ES35240DJ
STARLET 1.3	(EP91)	04/96→03/99						ES45300D
VERSO 1.6		04/09→		RUN50D	MAG50D	ETS50ND	ETS50D3N-ETS50D4N	
VERSO 1.8		04/09→		RUN62D	MAG62D	ETS62ND	ETS60D3N	438320ES
URBAN CRUISER 1.33	Stop/Start , A	04/09→	SST63D					
YARIS 1.0 16V	(_CP10)	03/03→			MAG44DB	ETS44NDB		ES45NDB
YARIS 1.0 16V (SCP10_)	(_CP10)	04/99→						ES45300SJ
YARIS 1.3 16V (NCP10_)	(_CP10)	11/99→						ES45300SJ
YARIS 1.3	(_CP10)	04/02→						ES45300SJ
YARIS 1.5 TS (NCP13)	(_CP10)	01/03→						ES45300SJ
YARIS 1.5 VVT-i TS	(_CP10)	04/01→		RUN50D	MAG50D	ETS50ND	ETS50D3N-ETS50D4N	
YARIS 1.5 VVT-i TS	(_CP10)	03/03→07/05		RUN50D	MAG50D	ETS50ND	ETS50D3N-ETS50D4N	
YARIS 1.0 VVT-i		01/06→		RUN50D	MAG50D	ETS50ND	ETS50D3N-ETS50D4N	
YARIS 1.3 VVT-i		01/06→		RUN50D	MAG50D	ETS50ND	ETS50D3N-ETS50D4N	
YARIS 1.3 VVT-i	Stop/Start , A	03/09→	SST63D					
YARIS 1.8 VVTi		01/07→		RUN50D	MAG50D	ETS50ND	ETS50D3N-ETS50D4N	
YARIS D-4D		01/06→		RUN62D	MAG62D	ETS62ND	ETS60D3N	438320ES
YARIS VERSO 1.3 (NCP22)	(NC/LP2_)	11/99→						ES45300SJ
YARIS VERSO 1.3 (NCP22)	(NC/LP2_)	11/99→						ES45300SJ
YARIS VERSO 1.5 (NCP21)	(NC/LP2_)	05/03→						ES45300SJ
YARIS VERSO 1.5 (NCP21)	(NC/LP2_)	03/00→						ES45300SJ
TVR								
TVR TUSCAN II Roadster 4.0		01/98→			MAG72DB	ETS71NDB		
VAUXHALL								
AGILA 1.0 12V		09/00→			MAG44DB	ETS44NDB		ES45NDB
AGILA 1.0 12V		08/03→			MAG44DB	ETS44NDB		ES45NDB
AGILA 1.2 16V		09/00→			MAG44DB	ETS44NDB		ES45NDB
AGILA 1.2 16V Twinport		07/04→			MAG44DB	ETS44NDB		ES45NDB
AGILA 1.0		01/08→			MAG44DB	ETS44NDB		ES45NDB
AGILA 1.2		05/09→			MAG44DB	ETS44NDB		ES45NDB
AGILA 1.2		01/08→			MAG44DB	ETS44NDB		ES45NDB
AGILA 1.3 CDTI		01/08→			MAG72DB	ETS71NDB		
ARENA Combi 1.9 D		03/98→08/01		RUN72D	MAG74D	ETS74ND	ETS70D1N-ETS74DI	476420ES
ARENA Combi 2.5 D		03/98→08/01		RUN72D	MAG74D	ETS74ND	ETS70D1N-ETS74DI	476420ES
ARENA Van 1.9 D		03/98→08/01		RUN72D	MAG74D	ETS74ND	ETS70D1N-ETS74DI	476420ES
ARENA Van 2.5 D		03/98→08/01		RUN72D	MAG74D	ETS74ND	ETS70D1N-ETS74DI	476420ES
ASTRA Mk II Hatchback 1.4 i		01/90→08/91			MAG44DB	ETS44NDB		ES45NDB
ASTRA Mk II Hatchback 1.4 S		01/90→08/91			MAG62DB	ETS60NDB-ETS50NDB		ES60NDB
ASTRA Mk II Belmont 1.4 i		01/90→12/91			MAG44DB	ETS44NDB		ES45NDB

	Design		START	RUN	MAGIS	ETS	ETS alternative	ES
VAUXHALL								
ASTRA Mk II Estate 1.8 i		01/90→08/91			MAG44DB	ETS44NDB		ES45NDB
ASTRA Mk II Convertible 1.6 i		01/91→08/93			MAG62DB	ETS60NDB-ETS50NDB		ES60NDB
ASTRA Mk II Convertible 2.0 i CAT		01/91→08/93			MAG62DB	ETS60NDB-ETS50NDB		ES60NDB
ASTRA Mk III Hatchback 1.4 i		09/91→02/98			MAG44DB	ETS44NDB		ES45NDB
ASTRA Mk III Hatchback 1.4 S		09/91→02/98			MAG44DB	ETS44NDB		ES45NDB
ASTRA Mk III Hatchback 1.4 i		03/92→02/98			MAG44DB	ETS44NDB		ES45NDB
ASTRA Mk III Hatchback 1.4 i 16V		02/96→02/98			MAG44DB	ETS44NDB		ES45NDB
ASTRA Mk III Hatchback 1.6 i		07/94→02/98			MAG44DB	ETS44NDB		ES45NDB
ASTRA Mk III Hatchback 1.6 i		09/91→02/98			MAG44DB	ETS44NDB		ES45NDB
ASTRA Mk III Hatchback 1.6 i		03/92→02/98			MAG44DB	ETS44NDB		ES45NDB
ASTRA Mk III Hatchback 1.6 i 16V		01/94→02/98			MAG44DB	ETS44NDB		ES45NDB
ASTRA Mk III Hatchback 1.8 i		09/91→02/98			MAG44DB	ETS44NDB		ES45NDB
ASTRA Mk III Hatchback 1.8 i 16V		09/94→02/98			MAG44DB	ETS44NDB		ES45NDB
ASTRA Mk III Hatchback 1.8 i 16V		09/94→02/98			MAG44DB	ETS44NDB		ES45NDB
ASTRA Mk III Hatchback 2.0 i		09/91→02/98			MAG44DB	ETS44NDB		ES45NDB
ASTRA Mk III Hatchback 2.0 i 16V		01/94→02/98			MAG44DB	ETS44NDB		ES45NDB
ASTRA Mk III Hatchback 2.0 i 16V		09/91→02/98			MAG44DB	ETS44NDB		ES45NDB
ASTRA Mk III Hatchback 1.7 D		12/91→02/98			MAG72DB	ETS71NDB		
ASTRA Mk III Hatchback 1.7 D		09/91→12/94			MAG72DB	ETS71NDB		
ASTRA Mk III Hatchback 1.7 TD		11/94→02/98			MAG72DB	ETS71NDB		
ASTRA Mk III Hatchback 1.7 TD		12/91→02/98			MAG72DB	ETS71NDB		
ASTRA Mk III 1.4 i		09/91→09/98			MAG44DB	ETS44NDB		ES45NDB
ASTRA Mk III 1.4 i		03/92→09/98			MAG44DB	ETS44NDB		ES45NDB
ASTRA Mk III 1.4 i 16V		02/96→09/98			MAG44DB	ETS44NDB		ES45NDB
ASTRA Mk III 1.6 i		08/94→07/96			MAG44DB	ETS44NDB		ES45NDB
ASTRA Mk III 1.6 i		03/92→09/98			MAG44DB	ETS44NDB		ES45NDB
ASTRA Mk III 1.6 i		05/92→12/94			MAG44DB	ETS44NDB		ES45NDB
ASTRA Mk III 1.6 i 16V		08/94→09/98			MAG44DB	ETS44NDB		ES45NDB
ASTRA Mk III 1.8 i		03/92→09/98			MAG44DB	ETS44NDB		ES45NDB
ASTRA Mk III 1.8 i 16V		01/94→12/96			MAG44DB	ETS44NDB		ES45NDB
ASTRA Mk III 1.8 i 16V		06/93→10/94			MAG44DB	ETS44NDB		ES45NDB
ASTRA Mk III 2.0 i		03/92→09/98			MAG44DB	ETS44NDB		ES45NDB
ASTRA Mk III 2.0 i 16V		02/95→09/98			MAG44DB	ETS44NDB		ES45NDB
ASTRA Mk III 1.7 D		03/92→09/92			MAG72DB	ETS71NDB		
ASTRA Mk III 1.7 D		07/92→09/98			MAG72DB	ETS71NDB		
ASTRA Mk III 1.7 TD		11/94→09/98			MAG72DB	ETS71NDB		
ASTRA Mk III 1.7 TD		12/91→09/98			MAG72DB	ETS71NDB		
ASTRA Mk III Estate 1.4 i		09/91→02/98			MAG44DB	ETS44NDB		ES45NDB
ASTRA Mk III Estate 1.4 S		09/91→02/98			MAG44DB	ETS44NDB		ES45NDB
ASTRA Mk III Estate 1.4 i		03/91→02/98			MAG44DB	ETS44NDB		ES45NDB
ASTRA Mk III Estate 1.4 i 16V		02/96→01/98			MAG44DB	ETS44NDB		ES45NDB
ASTRA Mk III Estate 1.6 i		07/94→02/98			MAG44DB	ETS44NDB		ES45NDB
ASTRA Mk III Estate 1.6 i		09/91→02/98			MAG44DB	ETS44NDB		ES45NDB
ASTRA Mk III Estate 1.6 Si		03/91→12/94			MAG44DB	ETS44NDB		ES45NDB
ASTRA Mk III Estate 1.6 i 16V		01/94→02/98			MAG44DB	ETS44NDB		ES45NDB
ASTRA Mk III Estate 1.8 i		09/91→02/98			MAG44DB	ETS44NDB		ES45NDB
ASTRA Mk III Estate 1.8 i 16V		09/94→02/98			MAG44DB	ETS44NDB		ES45NDB

	Design		START	RUN	MAGIS	ETS	ETS alternative	ES
VAUXHALL								
ASTRA Mk III Estate 1.8 i 16V		09/94→02/98			MAG44DB	ETS44NDB		ES45NDB
ASTRA Mk III Estate 2.0 i		09/91→02/98			MAG44DB	ETS44NDB		ES45NDB
ASTRA Mk III Estate 2.0 i 16V		01/94→02/98			MAG44DB	ETS44NDB		ES45NDB
ASTRA Mk III Estate 1.7 D		12/91→02/98			MAG72DB	ETS71NDB		
ASTRA Mk III Estate 1.7 D		03/91→12/94			MAG72DB	ETS71NDB		
ASTRA Mk III Estate 1.7 TD		12/91→02/98			MAG72DB	ETS71NDB		
ASTRA Mk III Estate 1.7 TD		01/94→02/98			MAG72DB	ETS71NDB		
ASTRA Mk III Convertible 1.4 i		05/93→03/01			MAG44DB	ETS44NDB		ES45NDB
ASTRA Mk III Convertible 1.4 i 16V		01/96→03/01			MAG44DB	ETS44NDB		ES45NDB
ASTRA Mk III Convertible 1.6 i		03/93→08/96			MAG44DB	ETS44NDB		ES45NDB
ASTRA Mk III Convertible 1.6 i		01/96→03/01			MAG44DB	ETS44NDB		ES45NDB
ASTRA Mk III Convertible 1.6		03/94→08/95			MAG44DB	ETS44NDB		ES45NDB
ASTRA Mk III Convertible 1.8 16V		11/94→03/01			MAG62DB	ETS60NDB-ETS50NDB		ES60NDB
ASTRA Mk III Convertible 2.0 i		03/93→10/94			MAG44DB	ETS44NDB		ES45NDB
ASTRA Mk IV Hatchback 1.2 16V		02/98→09/00			MAG44DB	ETS44NDB		ES45NDB
ASTRA Mk IV Hatchback 1.2 16V		09/00→			MAG44DB	ETS44NDB		ES45NDB
ASTRA Mk IV Hatchback 1.4 16V		02/98→			MAG44DB	ETS44NDB		ES45NDB
ASTRA Mk IV Hatchback 1.6		02/98→09/00			MAG44DB	ETS44NDB		ES45NDB
ASTRA Mk IV Hatchback 1.6		09/00→			MAG44DB	ETS44NDB		ES45NDB
ASTRA Mk IV Hatchback 1.6 Dualfuel		09/02→			MAG44DB	ETS44NDB		ES45NDB
ASTRA Mk IV Hatchback 1.6 16V		02/98→			MAG44DB	ETS44NDB		ES45NDB
ASTRA Mk IV Hatchback 1.8 16V		02/98→09/00			MAG62DB	ETS60NDB-ETS50NDB		ES60NDB
ASTRA Mk IV Hatchback 1.8 16V Dualfuel		09/02→			MAG62DB	ETS60NDB-ETS50NDB		ES60NDB
ASTRA Mk IV Hatchback 1.8 16V		09/00→			MAG62DB	ETS60NDB-ETS50NDB		ES60NDB
ASTRA Mk IV Hatchback 2.0 16V		02/98→			MAG62DB	ETS60NDB-ETS50NDB		ES60NDB
ASTRA Mk IV Hatchback 2.0 SRI Turbo		07/02→			MAG62DB	ETS60NDB-ETS50NDB		ES60NDB
ASTRA Mk IV Hatchback 2.2 16V		03/01→			MAG62DB	ETS60NDB-ETS50NDB		ES60NDB
ASTRA Mk IV Hatchback 1.7 DTI 16V		02/00→			MAG72DB	ETS71NDB		
ASTRA Mk IV Hatchback 1.7 CDTI 16V		04/03→			MAG72DB	ETS71NDB		
ASTRA Mk IV Hatchback 1.7 TD		02/98→08/00			MAG72DB	ETS71NDB		
ASTRA Mk IV Hatchback 2.0 DI		02/98→			MAG72DB	ETS71NDB		
ASTRA Mk IV Hatchback 2.0 DTI 16V		08/99→			MAG72DB	ETS71NDB		
ASTRA Mk IV 1.2 16V		09/98→09/00			MAG44DB	ETS44NDB		ES45NDB
ASTRA Mk IV 1.2 16V		09/00→			MAG62DB	ETS60NDB-ETS50NDB		ES60NDB
ASTRA Mk IV 1.4 16V		09/98→			MAG44DB	ETS44NDB		ES45NDB
ASTRA Mk IV 1.6		09/98→09/00			MAG44DB	ETS44NDB		ES45NDB
ASTRA Mk IV 1.6		09/00→			MAG62DB	ETS60NDB-ETS50NDB		ES60NDB
ASTRA Mk IV 1.6 Dualfuel		09/02→			MAG62DB	ETS60NDB-ETS50NDB		ES60NDB
ASTRA Mk IV 1.6 16V		09/98→			MAG44DB	ETS44NDB		ES45NDB
ASTRA Mk IV 1.8 16V		09/98→09/00			MAG62DB	ETS60NDB-ETS50NDB		ES60NDB
ASTRA Mk IV 1.8 16V Dualfuel		09/02→			MAG62DB	ETS60NDB-ETS50NDB		ES60NDB
ASTRA Mk IV 1.8 16V		09/00→			MAG62DB	ETS60NDB-ETS50NDB		ES60NDB
ASTRA Mk IV 2.0 16V		09/98→			MAG62DB	ETS60NDB-ETS50NDB		ES60NDB
ASTRA Mk IV 2.2 16V		03/01→			MAG62DB	ETS60NDB-ETS50NDB		ES60NDB
ASTRA Mk IV 1.7 DTI 16V		02/00→			MAG72DB	ETS71NDB		
ASTRA Mk IV 1.7 CDTI 16V		04/03→			MAG72DB	ETS71NDB		

	Design		START	RUN	MAGIS	ETS	ETS alternative	ES
VAUXHALL								
ASTRA Mk IV 1.7 TD		09/98→08/00			MAG72DB	ETS71NDB		
ASTRA Mk IV 2.0 DI		09/98→			MAG72DB	ETS71NDB		
ASTRA Mk IV 2.0 DTI 16V		08/99→			MAG72DB	ETS71NDB		
ASTRA Mk IV Estate 1.2 16V		02/98→09/00			MAG44DB	ETS44NDB		ES45NDB
ASTRA Mk IV Estate 1.2 16V		09/00→			MAG62DB	ETS60NDB-ETS50NDB		ES60NDB
ASTRA Mk IV Estate 1.4 16V		02/98→			MAG44DB	ETS44NDB		ES45NDB
ASTRA Mk IV Estate 1.6		02/98→09/00			MAG44DB	ETS44NDB		ES45NDB
ASTRA Mk IV Estate 1.6		09/00→			MAG62DB	ETS60NDB-ETS50NDB		ES60NDB
ASTRA Mk IV Estate 1.6 Dualfuel		09/02→			MAG62DB	ETS60NDB-ETS50NDB		ES60NDB
ASTRA Mk IV Estate 1.6 16V		02/98→			MAG44DB	ETS44NDB		ES45NDB
ASTRA Mk IV Estate 1.8 16V		02/98→09/00			MAG62DB	ETS60NDB-ETS50NDB		ES60NDB
ASTRA Mk IV Estate 1.8 16V Dualfuel		09/02→			MAG62DB	ETS60NDB-ETS50NDB		ES60NDB
ASTRA Mk IV Estate 1.8 16V		09/00→			MAG62DB	ETS60NDB-ETS50NDB		ES60NDB
ASTRA Mk IV Estate 2.0 16V		02/98→			MAG62DB	ETS60NDB-ETS50NDB		ES60NDB
ASTRA Mk IV Estate 2.2 16V		03/01→			MAG62DB	ETS60NDB-ETS50NDB		ES60NDB
ASTRA Mk IV Estate 1.7 DTI 16V		02/00→			MAG72DB	ETS71NDB		
ASTRA Mk IV Estate 1.7 CDTI 16V		04/03→			MAG72DB	ETS71NDB		
ASTRA Mk IV Estate 1.7 TD		02/98→08/00			MAG72DB	ETS71NDB		
ASTRA Mk IV Estate 2.0 DI		02/98→			MAG72DB	ETS71NDB		
ASTRA Mk IV Estate 2.0 DTI 16V		08/99→			MAG72DB	ETS71NDB		
ASTRA Mk IV Coupe 1.8 16V		03/00→10/00			MAG62DB	ETS60NDB-ETS50NDB		ES60NDB
ASTRA Mk IV Coupe 1.8 16V Dualfuel		09/02→			MAG62DB	ETS60NDB-ETS50NDB		ES60NDB
ASTRA Mk IV Coupe 1.8 16V		09/00→			MAG62DB	ETS60NDB-ETS50NDB		ES60NDB
ASTRA Mk IV Coupe 2.0		08/02→05/05			MAG62DB	ETS60NDB-ETS50NDB		ES60NDB
ASTRA Mk IV Coupe 2.0 16V Turbo		09/00→			MAG62DB	ETS60NDB-ETS50NDB		ES60NDB
ASTRA Mk IV Coupe 2.2 16V		03/00→			MAG62DB	ETS60NDB-ETS50NDB		ES60NDB
ASTRA MK IV Convertible 1.6 16V		03/01→			MAG62DB	ETS60NDB-ETS50NDB		ES60NDB
ASTRA MK IV Convertible 1.8 16V		03/01→			MAG62DB	ETS60NDB-ETS50NDB		ES60NDB
ASTRA MK IV Convertible 2.0		09/02→07/06			MAG62DB	ETS60NDB-ETS50NDB		ES60NDB
ASTRA MK IV Convertible 2.0 Turbo		03/02→			MAG62DB	ETS60NDB-ETS50NDB		ES60NDB
ASTRA MK IV Convertible 2.2 16V		03/01→			MAG62DB	ETS60NDB-ETS50NDB		ES60NDB
ASTRA MK V Sport Hatch 1.6		02/05→			MAG62DB	ETS60NDB-ETS50NDB		ES60NDB
ASTRA MK V Sport Hatch 1.6		10/06→			MAG62DB	ETS60NDB-ETS50NDB		ES60NDB
ASTRA MK V Sport Hatch 1.8		02/05→			MAG62DB	ETS60NDB-ETS50NDB		ES60NDB
ASTRA MK V Sport Hatch 1.8		03/07→			MAG62DB	ETS60NDB-ETS50NDB		ES60NDB
ASTRA MK V Sport Hatch 2.0 Turbo		02/05→			MAG62DB	ETS60NDB-ETS50NDB		ES60NDB
ASTRA MK V Sport Hatch 1.3 CDTi		04/05→			MAG62DB	ETS60NDB-ETS50NDB		ES60NDB
ASTRA MK V Sport Hatch 1.7 CDTi		02/05→			MAG62DB	ETS60NDB-ETS50NDB		ES60NDB
ASTRA MK V Sport Hatch 1.9 CDTi		02/05→			MAG72DB	ETS71NDB		
ASTRA MK V Sport Hatch 1.9 CDTi		08/05→			MAG72DB	ETS71NDB		
ASTRA MK V Sport Hatch 1.9 CDTi		02/05→			MAG72DB	ETS71NDB		
ASTRA MK V Hatchback 1.4		03/04→			MAG44DB	ETS44NDB		ES45NDB
ASTRA MK V Hatchback 1.6		03/04→			MAG62DB	ETS60NDB-ETS50NDB		ES60NDB
ASTRA MK V Hatchback 1.6		10/06→			MAG62DB	ETS60NDB-ETS50NDB		ES60NDB
ASTRA MK V Hatchback 1.8		03/04→			MAG62DB	ETS60NDB-ETS50NDB		ES60NDB
ASTRA MK V Hatchback 2.0 Turbo		03/04→			MAG62DB	ETS60NDB-ETS50NDB		ES60NDB
ASTRA MK V Hatchback 2.0 Turbo		03/04→			MAG62DB	ETS60NDB-ETS50NDB		ES60NDB

	Design		START	RUN	MAGIS	ETS	ETS alternative	ES
VAUXHALL								
ASTRA MK V Hatchback 2.0 Turbo		03/05→			MAG62DB	ETS60NDB-ETS50NDB		ES60NDB
ASTRA MK V Hatchback 1.3 CDTI		10/05→			MAG62DB	ETS60NDB-ETS50NDB		ES60NDB
ASTRA MK V Hatchback 1.7 CDTI		03/04→			MAG72DB	ETS71NDB		
ASTRA MK V Hatchback 1.7 CDTI		03/04→			MAG72DB	ETS71NDB		
ASTRA MK V Hatchback 1.7 TD		09/08→			MAG62DB	ETS60NDB-ETS50NDB		ES60NDB
ASTRA MK V Hatchback 1.7 CDTi		02/07→			MAG62DB	ETS60NDB-ETS50NDB		ES60NDB
ASTRA MK V Hatchback 1.9 CDTI		08/05→			MAG72DB	ETS71NDB		
ASTRA MK V Hatchback 1.9 CDTI 16V		04/04→			MAG72DB	ETS71NDB		
ASTRA MK V Hatchback 1.9 CDTI		06/04→			MAG72DB	ETS71NDB		
ASTRA MK V Estate 1.4		08/04→			MAG44DB	ETS44NDB		ES45NDB
ASTRA MK V Estate 1.6		08/04→			MAG62DB	ETS60NDB-ETS50NDB		ES60NDB
ASTRA MK V Estate 1.6		10/06→			MAG62DB	ETS60NDB-ETS50NDB		ES60NDB
ASTRA MK V Estate 1.6		10/06→			MAG62DB	ETS60NDB-ETS50NDB		ES60NDB
ASTRA MK V Estate 1.8		01/08→			MAG62DB	ETS60NDB-ETS50NDB		ES60NDB
ASTRA MK V Estate 1.8		08/04→			MAG62DB	ETS60NDB-ETS50NDB		ES60NDB
ASTRA MK V Estate 2.0 Turbo		08/04→			MAG62DB	ETS60NDB-ETS50NDB		ES60NDB
ASTRA MK V Estate 2.0 Turbo		08/04→			MAG62DB	ETS60NDB-ETS50NDB		ES60NDB
ASTRA MK V Estate 1.3 CDTI		08/05→			MAG62DB	ETS60NDB-ETS50NDB		ES60NDB
ASTRA MK V Estate 1.7 CDTI		08/04→			MAG72DB	ETS71NDB		
ASTRA MK V Estate 1.7 TD		09/08→			MAG62DB	ETS60NDB-ETS50NDB		ES60NDB
ASTRA MK V Estate 1.7 CDTi		02/07→			MAG62DB	ETS60NDB-ETS50NDB		ES60NDB
ASTRA MK V Estate 1.9 CDTI 16V		08/04→			MAG72DB	ETS71NDB		
ASTRA MK V Estate 1.9 CDTi		08/05→			MAG72DB	ETS71NDB		
ASTRA MK V Estate 1.9 CDTI		09/05→			MAG72DB	ETS71NDB		
ASTRA MK V Estate 1.9 CDTI		08/04→			MAG72DB	ETS71NDB		
ASTRA TwinTop 1.6		09/05→			MAG62DB	ETS60NDB-ETS50NDB		ES60NDB
ASTRA TwinTop 1.6		10/06→			MAG62DB	ETS60NDB-ETS50NDB		ES60NDB
ASTRA TwinTop 1.6		10/06→			MAG62DB	ETS60NDB-ETS50NDB		ES60NDB
ASTRA TwinTop 1.8		05/08→			MAG62DB	ETS60NDB-ETS50NDB		ES60NDB
ASTRA TwinTop 2.0		02/06→09/06			MAG62DB	ETS60NDB-ETS50NDB		ES60NDB
ASTRA TwinTop 2.0 i 16v Turbo		01/06→			MAG62DB	ETS60NDB-ETS50NDB		ES60NDB
ASTRA TwinTop 1.9 CDTi 16v		01/06→			MAG72DB	ETS71NDB		
ASTRA MK VI 1.4 i 16v VVT		12/09→			MAG44DB	ETS44NDB		ES45NDB
ASTRA MK VI 1.4 i 16v VVT		12/09→			MAG44DB	ETS44NDB		ES45NDB
ASTRA MK VI 1.4 i 16v VVT Turbo		12/09→			MAG44DB	ETS44NDB		ES45NDB
ASTRA MK VI 1.6 i 16v VVT		12/09→			MAG62DB	ETS60NDB-ETS50NDB		ES60NDB
ASTRA MK VI 1.6 i 16v Turbo		12/09→			MAG62DB	ETS60NDB-ETS50NDB		ES60NDB
ASTRA MK VI 1.7 CDTi		12/09→			MAG62DB	ETS60NDB-ETS50NDB		ES60NDB
ASTRA MK VI 1.7 CDTi		12/09→			MAG62DB	ETS60NDB-ETS50NDB		ES60NDB
ASTRA MK VI 2.0 CDTi		12/09→			MAG72DB	ETS71NDB		
ASTRAVAN Mk III 1.4 i		01/91→10/94			MAG44DB	ETS44NDB		ES45NDB
ASTRAVAN Mk III 1.6 i		02/94→10/96			MAG44DB	ETS44NDB		ES45NDB
ASTRAVAN Mk III 1.6 i		01/91→08/98			MAG44DB	ETS44NDB		ES45NDB
ASTRAVAN Mk III 1.7 D		01/91→08/94			MAG72DB	ETS71NDB		
ASTRAVAN Mk III 1.7 TD		01/94→08/98			MAG72DB	ETS71NDB		
ASTRAVAN Mk IV 1.6 i		08/98→09/00			MAG44DB	ETS44NDB		ES45NDB
ASTRAVAN Mk IV 1.6 i		09/00→			MAG44DB	ETS44NDB		ES45NDB

	Design		START	RUN	MAGIS	ETS	ETS alternative	ES
VAUXHALL								
ASTRAVAN Mk IV 1.7 DTI		04/01→			MAG72DB	ETS71NDB		
ASTRAVAN Mk IV 1.7 CDTI		04/04→			MAG72DB	ETS71NDB		
ASTRAVAN Mk IV 1.7 TD		08/98→			MAG72DB	ETS71NDB		
ASTRAVAN Mk IV 2.0 DI		08/98→			MAG72DB	ETS71NDB		
ASTRAVAN Mk IV 2.0 DTI		04/04→			MAG72DB	ETS71NDB		
ASTRAVAN MK V 1.4 i 16V		03/05→			MAG44DB	ETS44NDB		ES45NDB
ASTRAVAN MK V 1.6		03/05→			MAG62DB	ETS60NDB-ETS50NDB		ES60NDB
ASTRAVAN MK V 1.3 CDTi 16V		08/05→			MAG62DB	ETS60NDB-ETS50NDB		ES60NDB
ASTRAVAN MK V 1.7 CDTi		03/05→07/06			MAG62DB	ETS60NDB-ETS50NDB		ES60NDB
ASTRAVAN MK V 1.9 CDTi		03/05→			MAG72DB	ETS71NDB		
ASTRAVAN MK V 1.9 CDTi 16V		03/05→			MAG72DB	ETS71NDB		
CALIBRA 2.0 i		06/90→07/97		RUN62D	MAG62D	ETS62ND	ETS60D3N	438320ES
CALIBRA 2.0 i 4x4		06/90→07/97		RUN62D	MAG62D	ETS62ND	ETS60D3N	438320ES
CALIBRA 2.0 i 16V		06/90→07/97		RUN62D	MAG62D	ETS62ND	ETS60D3N	438320ES
CALIBRA 2.0 i 16V 4x4		02/94→07/97		RUN62D	MAG62D	ETS62ND	ETS60D3N	438320ES
CALIBRA 2.0 i 16V		06/90→02/94		RUN62D	MAG62D	ETS62ND	ETS60D3N	438320ES
CALIBRA 2.0 i 16V 4x4		06/90→02/94		RUN62D	MAG62D	ETS62ND	ETS60D3N	438320ES
CALIBRA 2.0 i Turbo 4x4		03/92→07/97		RUN62D	MAG62D	ETS62ND	ETS60D3N	438320ES
CALIBRA 2.5 i V6		04/93→07/97		RUN62D	MAG62D	ETS62ND	ETS60D3N	438320ES
CARLTON Mk III 2.0		09/90→03/94			MAG62DB	ETS60NDB-ETS50NDB		ES60NDB
CARLTON Mk III 2.0		09/90→03/94			MAG62DB	ETS60NDB-ETS50NDB		ES60NDB
CARLTON Mk III 2.6 i		09/90→03/94			MAG72DB	ETS71NDB		
CARLTON Mk III 3.6 24V Lotus		08/90→09/92		RUN72D	MAG74D	ETS74ND	ETS70D1N-ETS74DI	476420ES
CARLTON Mk III Estate 2.0 i		09/90→03/94			MAG62DB	ETS60NDB-ETS50NDB		ES60NDB
CARLTON Mk III Estate 2.0		09/90→03/94			MAG62DB	ETS60NDB-ETS50NDB		ES60NDB
CARLTON Mk III Estate 2.6 i		09/90→03/94			MAG72DB	ETS71NDB		
CAVALIER Mk III Hatchback 1.6 i		09/93→11/95			MAG44DB	ETS44NDB		ES45NDB
CAVALIER Mk III Hatchback 1.8 i CAT		03/90→11/95			MAG62DB	ETS60NDB-ETS50NDB		ES60NDB
CAVALIER Mk III Hatchback 2.0 i CAT		09/90→11/95			MAG62DB	ETS60NDB-ETS50NDB		ES60NDB
CAVALIER Mk III Hatchback 2.0 i 4x4		01/91→10/92			MAG62DB	ETS60NDB-ETS50NDB		ES60NDB
CAVALIER Mk III Hatchback 2.0 i 16V 4x4		01/92→11/93			MAG62DB	ETS60NDB-ETS50NDB		ES60NDB
CAVALIER Mk III Hatchback 2.0 i 16V		09/93→11/95			MAG62DB	ETS60NDB-ETS50NDB		ES60NDB
CAVALIER Mk III Hatchback 2.5 V6		02/93→11/95			MAG62DB	ETS60NDB-ETS50NDB		ES60NDB
CAVALIER Mk III Hatchback 1.7 D		07/92→11/95		RUN72D	MAG74D	ETS74ND	ETS70D1N-ETS74DI	476420ES
CAVALIER Mk III 1.6 i	(87)	09/93→11/95			MAG62DB	ETS60NDB-ETS50NDB		ES60NDB
CAVALIER Mk III 1.8 i CAT	(87)	03/90→11/95			MAG62DB	ETS60NDB-ETS50NDB		ES60NDB
CAVALIER Mk III 2.0 i CAT	(87)	09/90→11/95			MAG62DB	ETS60NDB-ETS50NDB		ES60NDB
CAVALIER Mk III 2.0 i 4x4	(87)	01/91→10/92			MAG62DB	ETS60NDB-ETS50NDB		ES60NDB
CAVALIER Mk III 2.0 SRi 16V	(87)	09/93→11/95			MAG62DB	ETS60NDB-ETS50NDB		ES60NDB
CAVALIER Mk III 2.0 i Turbo 4x4	(87)	06/92→11/94			MAG62DB	ETS60NDB-ETS50NDB		ES60NDB
CAVALIER Mk III 2.5 V6	(87)	02/93→11/95			MAG62DB	ETS60NDB-ETS50NDB		ES60NDB
CAVALIER Mk III 1.7 D	(87)	07/92→11/95		RUN72D	MAG74D	ETS74ND	ETS70D1N-ETS74DI	476420ES
COMBO 1.2		07/94→10/01			MAG44DB	ETS44NDB		ES45NDB
COMBO 1.4		07/94→10/01			MAG44DB	ETS44NDB		ES45NDB
COMBO 1.4		07/94→10/01			MAG44DB	ETS44NDB		ES45NDB
COMBO 1.7 D		07/94→10/01			MAG62DB	ETS60NDB-ETS50NDB		ES60NDB

	Design		START	RUN	MAGIS	ETS	ETS alternative	ES
VAUXHALL								
COMBO 1.4		01/04→			MAG62DB	ETS60NDB	ETS60D4N	ES60NDB
COMBO 1.6		08/01→10/04			MAG62DB	ETS60NDB	ETS60D4N	ES60NDB
COMBO 1.6		10/01→			MAG62DB	ETS60NDB	ETS60D4N	ES60NDB
COMBO 1.3 CDTI 16V		10/05→			MAG62DB	ETS60NDB	ETS60D4N	ES60NDB
COMBO 1.7 DI 16V		09/01→			MAG72DB	ETS71NDB		
COMBO 1.7 DTI 16V		10/01→			MAG72DB	ETS71NDB		
COMBO 1.7 CDTI 16V		12/04→			MAG62DB	ETS60NDB	ETS60D4N	ES60NDB
CORSA 1.0 i 12V		11/96→09/00			MAG44DB	ETS44NDB		ES45NDB
CORSA 1.2 i		03/93→09/00			MAG44DB	ETS44NDB		ES45NDB
CORSA 1.2 i 16V		03/98→09/00			MAG44DB	ETS44NDB		ES45NDB
CORSA 1.4 i		03/93→09/00			MAG44DB	ETS44NDB		ES45NDB
CORSA 1.4 i S		03/93→09/00			MAG44DB	ETS44NDB		ES45NDB
CORSA 1.4 i 16V		09/94→09/00			MAG44DB	ETS44NDB		ES45NDB
CORSA 1.6 i 16V		09/94→09/00			MAG62DB	ETS60NDB-ETS50NDB		ES60NDB
CORSA 1.6 GSI 16V		03/93→09/00			MAG44DB	ETS44NDB		ES45NDB
CORSA 1.5 D		03/93→09/00			MAG72DB	ETS71NDB		
CORSA 1.5 TD		03/93→10/96			MAG72DB	ETS71NDB		
CORSA 1.7 D		02/96→09/00			MAG72DB	ETS71NDB		
CORSA Convertible 1.4 i 16V		01/98→			MAG44DB	ETS44NDB		ES45NDB
CORSAVAN 1.4 i		01/94→09/00			MAG44DB	ETS44NDB		ES45NDB
CORSAVAN 1.5 D		08/94→12/95			MAG72DB	ETS71NDB		
CORSAVAN 1.7 D		01/94→09/00			MAG72DB	ETS71NDB		
CORSA Mk II 1.3 CDTI 16V		04/04→			MAG62DB	ETS60NDB	ETS60D4N	ES60NDB
CORSA Mk II 1.7 DI 16V		09/00→			MAG72DB	ETS71NDB		
CORSA Mk II 1.7 DTI 16V		09/00→			MAG72DB	ETS71NDB		
CORSA Mk II 1.7 CDTI 16V		04/04→			MAG72DB	ETS71NDB		
CORSAVAN MK II 1.3 CDTI 16V		04/04→			MAG62DB	ETS60NDB	ETS60D4N	ES60NDB
CORSAVAN MK II 1.7 DI 16V		09/00→			MAG72DB	ETS71NDB		
CORSAVAN MK II 1.7 DTI 16V		09/00→			MAG72DB	ETS71NDB		
CORSA Mk III 1.0		07/06→		RUN50D				
CORSA Mk III 1.2		07/06→		RUN50D				
CORSA Mk III 1.4		07/06→		RUN50D				
CORSA Mk III 1.6 SRi		05/07→		RUN50D				
CORSA Mk III 1.6 Turbo		02/07→		RUN50D				
CORSA Mk III 1.3 CDTI		07/06→			MAG72DB	ETS71NDB		
CORSA Mk III 1.3 CDTI		07/06→			MAG72DB	ETS71NDB		
CORSA Mk III 1.7 CDTI		07/06→			MAG72DB	ETS71NDB		
FRONTERA Sport 2.0 i		03/92→10/98		RUN72D				
FRONTERA Sport 2.5 TDS		09/96→10/98		RUN72D				
FRONTERA Sport 2.8 TD		03/95→08/96		RUN72D				
FRONTERA 2.0		04/95→08/98		RUN72D				
FRONTERA 2.2 i		03/95→10/98		RUN72D				
FRONTERA 2.4 i		03/92→10/98		RUN72D				
FRONTERA 2.3 TD		03/92→10/98		RUN72D				
FRONTERA 2.5 TDS		09/96→10/98		RUN72D				
FRONTERA 2.8 TD		03/95→10/98		RUN72D				
FRONTERA Mk II 2.2 i		10/98→		RUN72D				

	Design		START	RUN	MAGIS	ETS	ETS alternative	ES
VAUXHALL								
FRONTERA Mk II 3.2 i		10/98→		RUN72D				
FRONTERA Mk II 2.2 DTI		10/98→		RUN72D				
INSIGNIA 1.6 Turbo		04/09→			MAG62DB	ETS60NDB	ETS60D4N	ES60NDB
INSIGNIA 1.6 Turbo		01/09→			MAG62DB	ETS60NDB	ETS60D4N	ES60NDB
INSIGNIA 1.8		07/08→			MAG62DB	ETS60NDB	ETS60D4N	ES60NDB
INSIGNIA 2.0 Turbo		07/08→			MAG72DB	ETS71NDB		
INSIGNIA 2.0 Turbo 4x4		07/08→			MAG72DB	ETS71NDB		
INSIGNIA 2.8 V6 Turbo		07/08→			MAG72DB	ETS71NDB		
INSIGNIA Saloon 1.6		07/08→			MAG62DB	ETS60NDB	ETS60D4N	ES60NDB
INSIGNIA Saloon 1.6 Turbo		04/09→			MAG62DB	ETS60NDB	ETS60D4N	ES60NDB
INSIGNIA Saloon 1.6 Turbo		01/09→			MAG62DB	ETS60NDB	ETS60D4N	ES60NDB
INSIGNIA Saloon 1.8		07/08→			MAG62DB	ETS60NDB	ETS60D4N	ES60NDB
INSIGNIA Saloon 2.0 Turbo		07/08→			MAG72DB	ETS71NDB		
INSIGNIA Saloon 2.0 Turbo 4x4		07/08→			MAG72DB	ETS71NDB		
INSIGNIA Saloon 2.8 V6 Turbo		07/08→			MAG72DB	ETS71NDB		
INSIGNIA Estate 1.6 Turbo		04/09→			MAG62DB	ETS60NDB	ETS60D4N	ES60NDB
INSIGNIA Estate 1.6 Turbo		01/09→			MAG62DB	ETS60NDB	ETS60D4N	ES60NDB
INSIGNIA Estate 1.8		07/08→			MAG62DB	ETS60NDB	ETS60D4N	ES60NDB
INSIGNIA Estate 2.0 Turbo		07/08→			MAG72DB	ETS71NDB		
INSIGNIA Estate 2.0 Turbo 4x4		07/08→			MAG72DB	ETS71NDB		
INSIGNIA Estate 2.8 V6 Turbo		08/08→			MAG72DB	ETS71NDB		
MERIVA 1.6 i		05/03→			MAG62DB	ETS60NDB	ETS60D4N	ES60NDB
MERIVA 1.6 i 16V		05/03→			MAG62DB	ETS60NDB	ETS60D4N	ES60NDB
MERIVA 1.6 i 16V Twinport		01/06→			MAG62DB	ETS60NDB	ETS60D4N	ES60NDB
MERIVA 1.8 i 16V		05/03→			MAG62DB	ETS60NDB-ETS50NDB		ES60NDB
MERIVA 1.6 Turbo		05/06→			MAG62DB	ETS60NDB	ETS60D4N	ES60NDB
MERIVA 1.3 CDTI		09/03→			MAG62DB	ETS60NDB	ETS60D4N	ES60NDB
MERIVA 1.7 CDTI 16V		04/04→			MAG72DB	ETS71NDB		
MERIVA 1.7 CDTi		08/06→			MAG72DB	ETS71NDB		
MIDI II 2.2 D		07/90→		RUN72D	MAG74D	ETS74ND	ETS70D1N-ETS74DI	476420ES
MIDI II 2.2 D All-wheel Drive		07/90→08/94		RUN72D	MAG74D	ETS74ND	ETS70D1N-ETS74DI	476420ES
MIDI II 2.4 TD		09/94→		RUN72D	MAG74D	ETS74ND	ETS70D1N-ETS74DI	476420ES
MIDI II 2.4 TD		10/94→08/97		RUN72D	MAG74D	ETS74ND	ETS70D1N-ETS74DI	476420ES
MIDI II 2.4 TD 4x4		01/94→07/96		RUN72D	MAG74D	ETS74ND	ETS70D1N-ETS74DI	476420ES
MONARO 5.7		03/04→08/05			MAG72DB	ETS71NDB		
MONARO 5.7		01/05→04/07			MAG72DB	ETS71NDB		
MONARO 5.7		04/04→08/05			MAG72DB	ETS71NDB		
MONARO 6.0		08/02→07/05			MAG72DB	ETS71NDB		
MONARO 6.0		01/05→04/07			MAG72DB	ETS71NDB		
MONARO 6.0		10/06→			MAG72DB	ETS71NDB		
MOVANO Combi 1.9 DTI	(JD)	09/00→10/01		RUN95D		ETS92ND-ETS95D1N		434440ES
MOVANO Combi 1.9 DTI	(JD)	10/01→		RUN95D		ETS92ND-ETS95D1N		434440ES
MOVANO Combi 2.2 DTI	(JD)	09/00→		RUN95D		ETS92ND-ETS95D1N		434440ES
MOVANO Combi 2.5 D	(JD)	10/98→09/00		RUN95D		ETS92ND-ETS95D1N		434440ES
MOVANO Combi 2.5 CDTI	(JD)	04/04→		RUN95D		ETS92ND-ETS95D1N		434440ES
MOVANO Combi 2.5 DTI	(JD)	10/01→		RUN95D		ETS92ND-ETS95D1N		434440ES
MOVANO Combi 2.5 CDTI	(JD)	08/06→		RUN95D		ETS92ND-ETS95D1N		434440ES

	Design		START	RUN	MAGIS	ETS	ETS alternative	ES
VAUXHALL								
MOVANO Combi 2.5 CDTI	(JD)	08/06→		RUN95D		ETS92ND-ETS95D1N		434440ES
MOVANO Combi 2.8 DTI	(JD)	10/98→10/01		RUN95D		ETS92ND-ETS95D1N		434440ES
MOVANO Combi 3.0 DTi	(JD)	10/03→		RUN95D		ETS92ND-ETS95D1N		434440ES
MOVANO Van 1.9 DTI	(FD)	09/00→10/01		RUN95D		ETS92ND-ETS95D1N		434440ES
MOVANO Van 1.9 DTI	(FD)	10/01→		RUN95D		ETS92ND-ETS95D1N		434440ES
MOVANO Van 2.2 DTI	(FD)	09/00→		RUN95D		ETS92ND-ETS95D1N		434440ES
MOVANO Van 2.5 D	(FD)	10/98→09/00		RUN95D		ETS92ND-ETS95D1N		434440ES
MOVANO Van 2.5 CDTI	(FD)	04/04→		RUN95D		ETS92ND-ETS95D1N		434440ES
MOVANO Van 2.5 DTI	(FD)	10/01→		RUN95D		ETS92ND-ETS95D1N		434440ES
MOVANO Van 2.5 CDTI	(FD)	08/06→		RUN95D		ETS92ND-ETS95D1N		434440ES
MOVANO Van 2.5 CDTI	(FD)	08/06→		RUN95D		ETS92ND-ETS95D1N		434440ES
MOVANO Van 2.8 TDI	(FD)	10/98→10/01		RUN95D		ETS92ND-ETS95D1N		434440ES
MOVANO Van 3.0 DTi	(FD)	10/03→		RUN95D		ETS92ND-ETS95D1N		434440ES
MOVANO Chassis/Cab 2.2 DTI	(ED, UD, HD)	09/00→		RUN95D		ETS92ND-ETS95D1N		434440ES
MOVANO Chassis/Cab 2.5 D	(ED, UD, HD)	10/98→09/00		RUN95D		ETS92ND-ETS95D1N		434440ES
MOVANO Chassis/Cab 2.5 CDTI	(ED, UD, HD)	04/04→		RUN95D		ETS92ND-ETS95D1N		434440ES
MOVANO Chassis/Cab 2.5 DTI	(ED, UD, HD)	10/01→		RUN95D		ETS92ND-ETS95D1N		434440ES
MOVANO Chassis/Cab 2.5 CDTI	(ED, UD, HD)	08/06→		RUN95D		ETS92ND-ETS95D1N		434440ES
MOVANO Chassis/Cab 2.5 CDTI	(ED, UD, HD)	08/06→		RUN95D		ETS92ND-ETS95D1N		434440ES
MOVANO Chassis/Cab 2.8 DTI	(ED, UD, HD)	10/98→10/01		RUN95D		ETS92ND-ETS95D1N		434440ES
MOVANO Chassis/Cab 3.0 DTi	(ED, UD, HD)	10/03→		RUN95D		ETS92ND-ETS95D1N		434440ES
NOVA Hatchback 1.2 N		01/90→03/93			MAG44DB	ETS44NDB		ES45NDB
NOVA Hatchback 1.4 i		01/90→03/93			MAG44DB	ETS44NDB		ES45NDB
NOVA Hatchback 1.4 i S		09/91→03/93			MAG44DB	ETS44NDB		ES45NDB
NOVA Hatchback 1.6 GSI CAT		02/92→03/93			MAG44DB	ETS44NDB		ES45NDB
NOVA Hatchback 1.5 TD		01/90→03/93			MAG72DB	ETS71NDB-ETS65NDB		ES70NDB
NOVA 1.5 TD		01/90→02/93			MAG62DB	ETS60NDB	ETS60D4N	ES60NDB
NOVAVAN 1.2		01/90→10/94			MAG44DB	ETS44NDB		ES45NDB
OMEGA 2.0		03/94→12/00			MAG62DB	ETS60NDB	ETS60D4N	ES60NDB
OMEGA 2.0		03/94→09/99			MAG62DB	ETS60NDB	ETS60D4N	ES60NDB
OMEGA 2.0 16V		03/94→09/99			MAG62DB	ETS60NDB	ETS60D4N	ES60NDB
OMEGA 2.2 16V		09/99→			MAG62DB	ETS60NDB	ETS60D4N	ES60NDB
OMEGA 2.5 V6		03/94→09/00			MAG62DB	ETS60NDB-ETS50NDB		ES60NDB
OMEGA 2.6 V6		09/00→			MAG62DB	ETS60NDB-ETS50NDB		ES60NDB
OMEGA 3.0 V6		04/94→			MAG62DB	ETS60NDB-ETS50NDB		ES60NDB
OMEGA 3.2 V6		02/01→			MAG62DB	ETS60NDB-ETS50NDB		ES60NDB
OMEGA 2.0 DTI 16V		10/98→09/00			MAG72DB	ETS71NDB-ETS65NDB		ES70NDB
OMEGA 2.2 DTI 16V		09/00→			MAG72DB	ETS71NDB-ETS65NDB		ES70NDB
OMEGA 2.5 TD		04/94→02/01			MAG88DB	ETS85NDB	ETS88D1N	ES90NDB
OMEGA 2.5 DTI 24V		09/01→			MAG88DB	ETS85NDB	ETS88D1N	ES90NDB
OMEGA Estate 2.0		03/94→09/99			MAG62DB	ETS60NDB-ETS50NDB		ES60NDB
OMEGA Estate 2.0 16V		03/94→09/99			MAG62DB	ETS60NDB-ETS50NDB		ES60NDB
OMEGA Estate 2.2 16V		09/99→			MAG62DB	ETS60NDB-ETS50NDB		ES60NDB
OMEGA Estate 2.5 V6		03/94→09/00			MAG62DB	ETS60NDB	ETS60D4N	ES60NDB
OMEGA Estate 2.6 V6		09/00→			MAG62DB	ETS60NDB	ETS60D4N	ES60NDB
OMEGA Estate 3.0 V6		04/94→			MAG62DB	ETS60NDB	ETS60D4N	ES60NDB
OMEGA Estate 3.2 V6		02/01→			MAG62DB	ETS60NDB	ETS60D4N	ES60NDB

	Design		START	RUN	MAGIS	ETS	ETS alternative	ES
VAUXHALL								
OMEGA Estate 2.0 DTI 16V		10/98→09/00			MAG72DB	ETS71NDB		
OMEGA Estate 2.2 DTI 16V		09/00→			MAG72DB	ETS71NDB		
OMEGA Estate 2.5 TD		04/94→02/01			MAG88DB	ETS85NDB	ETS88D1N	ES90NDB
OMEGA Estate 2.5 DTI 24V		09/01→			MAG72DB	ETS71NDB		
SENATOR Mk II 2.6 i		09/90→09/93		RUN62D	MAG62D	ETS62ND	ETS60D3N	438320ES
SIGNUM 1.8		06/03→07/05			MAG62DB	ETS60NDB-ETS50NDB		ES60NDB
SIGNUM 2.0 i Turbo		05/03→			MAG72DB	ETS71NDB		
SIGNUM 1.8		08/05→			MAG62DB	ETS60NDB	ETS60D4N	ES60NDB
SIGNUM 2.2 i		05/03→			MAG72DB	ETS71NDB		
SIGNUM 2.8 V6 Turbo		08/05→			MAG72DB	ETS71NDB		
SIGNUM 3.2 V6		05/03→			MAG72DB	ETS71NDB		
SIGNUM 1.9 CDTI		04/04→			MAG72DB	ETS71NDB		
SIGNUM 1.9 CDTI 16V		04/04→			MAG72DB	ETS71NDB		
SIGNUM 2.0 DTI		05/03→			MAG72DB	ETS71NDB		
SIGNUM 2.2 DTI		05/03→			MAG72DB	ETS71NDB		
SIGNUM 3.0 CDTi		05/03→			MAG88DB	ETS85NDB	ETS88D1N	ES90NDB
SIGNUM 3.0 V6 CDTI		09/05→			MAG88DB	ETS85NDB	ETS88D1N	ES90NDB
SINTRA 2.2 i 16 V		11/96→04/99			MAG62DB	ETS60NDB-ETS50NDB		ES60NDB
SINTRA 3.0 i 24V		11/96→04/99			MAG62DB	ETS60NDB-ETS50NDB		ES60NDB
SINTRA 2.2 DTI		07/97→04/99			MAG72DB	ETS71NDB		
SPEEDSTER 2.0	(VX220)	10/03→09/06			MAG62DB	ETS60NDB-ETS50NDB		ES60NDB
TIGRA 1.4 16V		07/94→			MAG44DB	ETS44NDB		ES45NDB
TIGRA 1.6 16V		07/94→			MAG44DB	ETS44NDB		ES45NDB
TIGRA TwinTop 1.4		06/04→			MAG44DB	ETS44NDB		ES45NDB
TIGRA TwinTop 1.8		06/04→			MAG44DB	ETS44NDB		ES45NDB
TIGRA TwinTop 1.3 CDTI		06/04→			MAG62DB	ETS60NDB-ETS50NDB		ES60NDB
VECTRA Hatchback 1.6 i		10/95→12/00			MAG44DB	ETS44NDB		ES45NDB
VECTRA Hatchback 1.6 i 16V		10/95→			MAG44DB	ETS44NDB		ES45NDB
VECTRA Hatchback 1.8 i 16V		10/95→09/00			MAG44DB	ETS44NDB		ES45NDB
VECTRA Hatchback 2.0 i 16V		10/95→09/00			MAG62DB	ETS60NDB-ETS50NDB		ES60NDB
VECTRA Hatchback 2.2 i 16V		09/00→			MAG62DB	ETS60NDB-ETS50NDB		ES60NDB
VECTRA Hatchback 2.5 i V6		10/95→09/00			MAG62DB	ETS60NDB-ETS50NDB		ES60NDB
VECTRA Hatchback 2.6 i V6		09/00→			MAG62DB	ETS60NDB-ETS50NDB		ES60NDB
VECTRA Hatchback 2.5 i GSi		05/98→09/99			MAG62DB	ETS60NDB-ETS50NDB		ES60NDB
VECTRA Hatchback 1.7 TD		10/95→11/96		RUN72D	MAG74D	ETS74ND	ETS70D1N-ETS74DI	476420ES
VECTRA Hatchback 2.0 Di 16V		11/96→		RUN72D	MAG74D	ETS74ND	ETS70D1N-ETS74DI	476420ES
VECTRA 1.6 i		10/95→12/00			MAG44DB	ETS44NDB		ES45NDB
VECTRA 1.6 i 16V		10/95→			MAG44DB	ETS44NDB		ES45NDB
VECTRA 1.8 i 16V		10/95→09/00			MAG44DB	ETS44NDB		ES45NDB
VECTRA 1.7 TD		10/95→11/96		RUN72D	MAG74D	ETS74ND	ETS70D1N-ETS74DI	476420ES
VECTRA 2.0 DI 16V		11/96→		RUN72D	MAG74D	ETS74ND	ETS70D1N-ETS74DI	476420ES
VECTRA Estate 1.6 i		11/96→			MAG44DB	ETS44NDB		ES45NDB
VECTRA Estate 1.6 i 16V		11/96→			MAG44DB	ETS44NDB		ES45NDB
VECTRA Estate 1.8 i 16V		11/96→09/00			MAG44DB	ETS44NDB		ES45NDB
VECTRA Estate 2.0 i 16V		11/96→09/00			MAG62DB	ETS60NDB-ETS50NDB		ES60NDB
VECTRA Estate 2.2 i 16V		09/00→			MAG62DB	ETS60NDB-ETS50NDB		ES60NDB
VECTRA Estate 2.5 i V6		11/96→09/00			MAG62DB	ETS60NDB-ETS50NDB		ES60NDB

	Design		START	RUN	MAGIS	ETS	ETS alternative	ES
VAUXHALL								
VECTRA Estate 2.6 i V6		09/00→			MAG62DB	ETS60NDB-ETS50NDB		ES60NDB
VECTRA Estate 2.5 i GSi		05/98→09/99			MAG62DB	ETS60NDB-ETS50NDB		ES60NDB
VECTRA Estate 2.0 DI 16V		11/96→		RUN72D	MAG74D	ETS74ND	ETS70D1N-ETS74DI	476420ES
VECTRA Mk II GTS 1.6 16V		06/04→		RUN62D	MAG62D	ETS62ND	ETS60D3N	438320ES
VECTRA Mk II GTS 1.6		01/06→		RUN62D	MAG62D	ETS62ND	ETS60D3N	438320ES
VECTRA Mk II GTS 1.8 16V		08/02→		RUN62D	MAG62D	ETS62ND	ETS60D3N	438320ES
VECTRA Mk II GTS 1.8 16V Dualfuel		08/02→		RUN62D	MAG62D	ETS62ND	ETS60D3N	438320ES
VECTRA Mk II GTS 1.8		01/06→		RUN62D	MAG62D	ETS62ND	ETS60D3N	438320ES
VECTRA Mk II GTS 2.0 16V Turbo		03/03→		RUN62D	MAG62D	ETS62ND	ETS60D3N	438320ES
VECTRA Mk II GTS 2.2 16V		08/02→		RUN62D	MAG62D	ETS62ND	ETS60D3N	438320ES
VECTRA Mk II GTS 2.2 direct		10/03→		RUN62D	MAG62D	ETS62ND	ETS60D3N	438320ES
VECTRA Mk II GTS 2.8 V6 Turbo		08/05→		RUN72D	MAG74D	ETS74ND	ETS70D1N-ETS74DI	476420ES
VECTRA Mk II GTS 2.8 V6 Turbo		08/06→		RUN72D	MAG74D	ETS74ND	ETS70D1N-ETS74DI	476420ES
VECTRA Mk II GTS 2.8 V6 Turbo		08/05→		RUN72D	MAG74D	ETS74ND	ETS70D1N-ETS74DI	476420ES
VECTRA Mk II GTS 3.2 V6		08/02→			MAG72DB	ETS71NDB		
VECTRA Mk II GTS 1.9 CDTI		10/05→			MAG72DB	ETS71NDB		
VECTRA Mk II GTS 1.9 CDTI		04/04→			MAG72DB	ETS71NDB		
VECTRA Mk II GTS 1.9 CDTI 16V		04/04→			MAG72DB	ETS71NDB		
VECTRA Mk II GTS 2.0 DTI 16V		08/02→			MAG72DB	ETS71NDB		
VECTRA Mk II GTS 2.2 DTI 16V		08/02→			MAG72DB	ETS71NDB		
VECTRA Mk II GTS 3.0 CDTi		08/05→			MAG72DB	ETS71NDB		
VECTRA Mk II 1.6 16V		06/04→		RUN62D	MAG62D	ETS62ND	ETS60D3N	438320ES
VECTRA Mk II 1.6		01/06→		RUN62D	MAG62D	ETS62ND	ETS60D3N	438320ES
VECTRA Mk II 1.8		04/02→		RUN62D	MAG62D	ETS62ND	ETS60D3N	438320ES
VECTRA Mk II 1.8 16V		04/02→		RUN62D	MAG62D	ETS62ND	ETS60D3N	438320ES
VECTRA Mk II 1.8 16V Dualfuel		04/02→		RUN62D	MAG62D	ETS62ND	ETS60D3N	438320ES
VECTRA Mk II 1.8		01/06→		RUN62D	MAG62D	ETS62ND	ETS60D3N	438320ES
VECTRA Mk II 2.0 16V Turbo		03/03→		RUN62D	MAG62D	ETS62ND	ETS60D3N	438320ES
VECTRA Mk II 2.2 16V		04/02→		RUN62D	MAG62D	ETS62ND	ETS60D3N	438320ES
VECTRA Mk II 2.2 direct		10/03→		RUN62D	MAG62D	ETS62ND	ETS60D3N	438320ES
VECTRA Mk II 2.8 V6 Turbo		08/05→			MAG72DB	ETS71NDB		
VECTRA Mk II 2.8 V6 Turbo		08/06→			MAG72DB	ETS71NDB		
VECTRA Mk II 2.8 V6 Turbo		08/05→			MAG72DB	ETS71NDB		
VECTRA Mk II 3.2 V6		06/03→			MAG72DB	ETS71NDB		
VECTRA Mk II 1.9 CDTI		10/05→			MAG72DB	ETS71NDB		
VECTRA Mk II 1.9 CDTI		04/04→			MAG72DB	ETS71NDB		
VECTRA Mk II 1.9 CDTI 16V		04/04→			MAG72DB	ETS71NDB		
VECTRA Mk II 2.0 DTI 16V		04/02→			MAG72DB	ETS71NDB		
VECTRA Mk II 2.2 DTI 16V		04/02→			MAG72DB	ETS71NDB		
VECTRA Mk II 3.0 CDTi		08/05→			MAG72DB	ETS71NDB		
VECTRA Mk II Estate 1.6 16V		06/04→		RUN62D	MAG62D	ETS62ND	ETS60D3N	438320ES
VECTRA Mk II Estate 1.8 16V		10/03→		RUN62D	MAG62D	ETS62ND	ETS60D3N	438320ES
VECTRA Mk II Estate 1.8		01/06→		RUN62D	MAG62D	ETS62ND	ETS60D3N	438320ES
VECTRA Mk II Estate 2.0 16V Turbo		10/03→		RUN62D	MAG62D	ETS62ND	ETS60D3N	438320ES
VECTRA Mk II Estate 2.2 direct		10/03→		RUN62D	MAG62D	ETS62ND	ETS60D3N	438320ES
VECTRA Mk II Estate 2.8 V6 Turbo		08/05→		RUN72D				
VECTRA Mk II Estate 2.8 V6 Turbo		08/06→		RUN72D				

	Design		START	RUN	MAGIS	ETS	ETS alternative	ES
VAUXHALL								
VECTRA Mk II Estate 3.2 V6		10/03→			MAG72DB	ETS71NDB		
VECTRA Mk II Estate 1.9 CDTI		10/05→			MAG72DB	ETS71NDB		
VECTRA Mk II Estate 1.9 CDTI		04/04→			MAG72DB	ETS71NDB		
VECTRA Mk II Estate 1.9 CDTI 16V		04/04→			MAG72DB	ETS71NDB		
VECTRA Mk II Estate 2.0 DTI 16V		10/03→			MAG72DB	ETS71NDB		
VECTRA Mk II Estate 2.2 DTI 16V		10/03→			MAG72DB	ETS71NDB		
VECTRA Mk II Estate 3.0 V6 CDTI		10/03→			MAG72DB	ETS71NDB		
VIVARO Combi 2.0 16V		08/01→		RUN72D	MAG74D	ETS74ND	ETS70D1N-ETS74DI	476420ES
VIVARO Combi 1.9 DI		08/01→		RUN72D	MAG74D	ETS74ND	ETS70D1N-ETS74DI	476420ES
VIVARO Combi 1.9 DTI		08/01→		RUN72D	MAG74D	ETS74ND	ETS70D1N-ETS74DI	476420ES
VIVARO Combi 2.0 CDTI		01/06→		RUN72D	MAG74D	ETS74ND	ETS70D1N-ETS74DI	476420ES
VIVARO Combi 2.0 CDTI		08/06→		RUN72D	MAG74D	ETS74ND	ETS70D1N-ETS74DI	476420ES
VIVARO Combi 2.5 DTI		04/04→		RUN95D		ETS92ND-ETS95D1N		434440ES
VIVARO Box 2.0 16V		08/01→		RUN72D	MAG74D	ETS74ND	ETS70D1N-ETS74DI	476420ES
VIVARO Box 1.9 DI		08/01→		RUN72D	MAG74D	ETS74ND	ETS70D1N-ETS74DI	476420ES
VIVARO Box 1.9 DTI		08/01→		RUN72D	MAG74D	ETS74ND	ETS70D1N-ETS74DI	476420ES
VIVARO Box 2.0 CDTI		01/06→		RUN72D	MAG74D	ETS74ND	ETS70D1N-ETS74DI	476420ES
VIVARO Box 2.0 CDTI		08/06→		RUN72D	MAG74D	ETS74ND	ETS70D1N-ETS74DI	476420ES
VIVARO Box 2.5 DTI		04/04→		RUN95D		ETS92ND-ETS95D1N		434440ES
VIVARO Box 2.5 CDTI		08/06→		RUN72D	MAG74D	ETS74ND	ETS70D1N-ETS74DI	476420ES
VIVARO Flatbed / Chassis 2.0 CDTI		01/06→		RUN72D	MAG74D	ETS74ND	ETS70D1N-ETS74DI	476420ES
VIVARO Flatbed / Chassis 2.0 CDTI		08/06→		RUN72D	MAG74D	ETS74ND	ETS70D1N-ETS74DI	476420ES
VIVARO Flatbed / Chassis 2.5 CDTI		04/03→07/06		RUN72D	MAG74D	ETS74ND	ETS70D1N-ETS74DI	476420ES
VIVARO Flatbed / Chassis 2.5 CDTI		08/06→		RUN72D	MAG74D	ETS74ND	ETS70D1N-ETS74DI	476420ES
VX220 2.0 i Turbo		04/03→	AGM70D	RUN72D	MAG74D	ETS74ND	ETS70D1N-ETS74DI	476420ES
VX220 2.2 i		09/00→	AGM70D	RUN72D	MAG74D	ETS74ND	ETS70D1N-ETS74DI	476420ES
VXR8 6.0		02/07→		RUN95D		ETS92ND-ETS95D1N		434440ES
VXR8 6.2		04/08→		RUN95D		ETS92ND-ETS95D1N		434440ES
ZAFIRA 1.6 CNG		09/01→06/05			MAG62DB	ETS60NDB-ETS50NDB		ES60NDB
ZAFIRA 1.6 16V		04/99→			MAG62DB	ETS60NDB-ETS50NDB		ES60NDB
ZAFIRA 1.8 16V		04/99→09/00			MAG62DB	ETS60NDB-ETS50NDB		ES60NDB
ZAFIRA 1.8 16V		09/00→			MAG62DB	ETS60NDB-ETS50NDB		ES60NDB
ZAFIRA 2.0 GSI Turbo		09/01→			MAG62DB	ETS60NDB-ETS50NDB		ES60NDB
ZAFIRA 1.9		06/02→06/05			MAG62DB	ETS60NDB-ETS50NDB		ES60NDB
ZAFIRA 2.2 16V		09/00→			MAG62DB	ETS60NDB-ETS50NDB		ES60NDB
ZAFIRA 2.0 DI 16V		10/99→			MAG72DB	ETS71NDB		
ZAFIRA 2.0 DTI 16V		04/99→			MAG72DB	ETS71NDB		
ZAFIRA 2.2 D		06/01→06/05			MAG72DB	ETS71NDB		
ZAFIRA Mk II 1.6		07/05→			MAG44DB	ETS44NDB		ES45NDB
ZAFIRA Mk II 1.6		12/07→			MAG44DB	ETS44NDB		ES45NDB
ZAFIRA Mk II 1.8		07/05→			MAG44DB	ETS44NDB		ES45NDB
ZAFIRA Mk II 2.2		07/05→			MAG62DB	ETS60NDB-ETS50NDB		ES60NDB
ZAFIRA Mk II 2.0		07/05→			MAG62DB	ETS60NDB-ETS50NDB		ES60NDB
ZAFIRA Mk II 2.0		01/06→			MAG62DB	ETS60NDB-ETS50NDB		ES60NDB
ZAFIRA Mk II 1.7 TD		04/09→		RUN62D	MAG62D	ETS62ND	ETS60D3N	438320ES
ZAFIRA Mk II 1.9 CDTI		07/05→			MAG62DB	ETS60NDB-ETS50NDB		ES60NDB
ZAFIRA Mk II 1.9 CDTI		07/05→			MAG62DB	ETS60NDB-ETS50NDB		ES60NDB

	Design		START	RUN	MAGIS	ETS	ETS alternative	ES
VOLVO								
C30 1.6		10/06→	AGM80D	RUN62D	MAG62D	ETS62ND	ETS60D3N	438320ES
C30 1.8		10/06→		RUN62D	MAG62D	ETS62ND	ETS60D3N	438320ES
C30 1.8 FlexFuel		01/07→		RUN72D	MAG74D	ETS74ND	ETS70D1N-ETS74DI	476420ES
C30 2.0		10/06→		RUN72D	MAG74D	ETS74ND	ETS70D1N-ETS74DI	476420ES
C30 2.4 i		10/06→		RUN72D	MAG74D	ETS74ND	ETS70D1N-ETS74DI	476420ES
C30 T5		10/06→		RUN72D	MAG74D	ETS74ND	ETS70D1N-ETS74DI	476420ES
C30 T5		03/07→		RUN72D	MAG74D	ETS74ND	ETS70D1N-ETS74DI	476420ES
C30 2.4 D5		10/06→			MAG82D	ETS80ND		
C30 2.0 D		10/06→			MAG82D	ETS80ND		
C30 D5		10/06→			MAG82D	ETS80ND		
S40 I 1.6	(VS)	03/99→12/03		RUN62D	MAG62D	ETS62ND	ETS60D3N	438320ES
S40 I 1.6	(VS)	09/95→08/99		RUN62D	MAG62D	ETS62ND	ETS60D3N	438320ES
S40 I 1.8	(VS)	07/95→08/99		RUN62D	MAG62D	ETS62ND	ETS60D3N	438320ES
S40 I 1.8	(VS)	06/01→08/03		RUN62D	MAG62D	ETS62ND	ETS60D3N	438320ES
S40 I 1.8	(VS)	03/99→12/03		RUN62D	MAG62D	ETS62ND	ETS60D3N	438320ES
S40 I 1.8 i	(VS)	06/01→12/03		RUN62D	MAG62D	ETS62ND	ETS60D3N	438320ES
S40 I 1.8 i	(VS)	03/98→12/03		RUN62D	MAG62D	ETS62ND	ETS60D3N	438320ES
S40 I 1.9 T4	(VS)	05/97→07/00		RUN72D	MAG74D	ETS74ND	ETS70D1N-ETS74DI	476420ES
S40 I 2.0	(VS)	07/95→12/03		RUN62D	MAG62D	ETS62ND	ETS60D3N	438320ES
S40 I 2.0	(VS)	07/95→08/99		RUN62D	MAG62D	ETS62ND	ETS60D3N	438320ES
S40 I 2.0 T	(VS)	10/97→07/00		RUN62D	MAG62D	ETS62ND	ETS60D3N	438320ES
S40 I 2.0 T	(VS)	06/01→12/03		RUN62D	MAG62D	ETS62ND	ETS60D3N	438320ES
S40 I 2.0 T	(VS)	07/00→06/01		RUN62D	MAG62D	ETS62ND	ETS60D3N	438320ES
S40 I 2.0 T4	(VS)	07/00→12/03		RUN72D	MAG74D	ETS74ND	ETS70D1N-ETS74DI	476420ES
S40 I 1.9 TD	(VS)	07/95→08/99		RUN72D	MAG74D	ETS74ND	ETS70D1N-ETS74DI	476420ES
S40 I 1.9 DI	(VS)	03/99→07/00		RUN72D	MAG74D	ETS74ND	ETS70D1N-ETS74DI	476420ES
S40 I 1.9 DI	(VS)	07/00→12/03		RUN72D	MAG74D	ETS74ND	ETS70D1N-ETS74DI	476420ES
S40 I 1.9 DI	(VS)	07/00→12/03		RUN72D	MAG74D	ETS74ND	ETS70D1N-ETS74DI	476420ES
V40 Estate 1.6	(VW)	03/99→06/04		RUN62D	MAG62D	ETS62ND	ETS60D3N	438320ES
V40 Estate 1.6	(VW)	12/95→08/99		RUN62D	MAG62D	ETS62ND	ETS60D3N	438320ES
V40 Estate 1.8	(VW)	07/95→08/99		RUN62D	MAG62D	ETS62ND	ETS60D3N	438320ES
V40 Estate 1.8 Blu-Fuel	(VW)	06/01→08/03		RUN62D	MAG62D	ETS62ND	ETS60D3N	438320ES
V40 Estate 1.8 Bi-Fuel	(VW)	11/99→08/03		RUN62D	MAG62D	ETS62ND	ETS60D3N	438320ES
V40 Estate 1.8	(VW)	03/99→06/04		RUN62D	MAG62D	ETS62ND	ETS60D3N	438320ES
V40 Estate 1.8 i	(VW)	06/01→06/04		RUN62D	MAG62D	ETS62ND	ETS60D3N	438320ES
V40 Estate 1.8 i	(VW)	03/98→06/04		RUN62D	MAG62D	ETS62ND	ETS60D3N	438320ES
V40 Estate 1.9 T4	(VW)	05/97→07/00		RUN62D	MAG62D	ETS62ND	ETS60D3N	438320ES
V40 Estate 2.0	(VW)	07/95→06/04		RUN62D	MAG62D	ETS62ND	ETS60D3N	438320ES
V40 Estate 2.0	(VW)	07/95→08/99		RUN62D	MAG62D	ETS62ND	ETS60D3N	438320ES
V40 Estate 2.0 T	(VW)	10/97→07/00		RUN62D	MAG62D	ETS62ND	ETS60D3N	438320ES
V40 Estate 2.0 T	(VW)	06/01→06/04		RUN62D	MAG62D	ETS62ND	ETS60D3N	438320ES
V40 Estate 2.0 T	(VW)	07/99→06/01		RUN62D	MAG62D	ETS62ND	ETS60D3N	438320ES
V40 Estate 2.0 T4	(VW)	07/00→06/04		RUN72D	MAG74D	ETS74ND	ETS70D1N-ETS74DI	476420ES
V40 Estate 1.9 TD	(VW)	07/95→08/99		RUN72D	MAG74D	ETS74ND	ETS70D1N-ETS74DI	476420ES
V40 Estate 1.9 DI	(VW)	03/99→07/00		RUN72D	MAG74D	ETS74ND	ETS70D1N-ETS74DI	476420ES
V40 Estate 1.9 DI	(VW)	07/00→06/04		RUN72D	MAG74D	ETS74ND	ETS70D1N-ETS74DI	476420ES

	Design		START	RUN	MAGIS	ETS	ETS alternative	ES
VOLVO								
V40 Estate 1.9 DI	(VW)	07/00→06/04		RUN72D	MAG74D	ETS74ND	ETS70D1N-ETS74DI	476420ES
V40 Estate 2.0 D	(VW)	12/02→06/04		RUN72D	MAG74D	ETS74ND	ETS70D1N-ETS74DI	476420ES
S40 II 1.6	(MS)	01/05→		RUN62D	MAG62D	ETS62ND	ETS60D3N	438320ES
S40 II 1.6 D	Stop/Start , A	10/08→	AGM70D					
S40 II 1.8	(MS)	04/04→		RUN62D	MAG62D	ETS62ND	ETS60D3N	438320ES
S40 II 1.8 FlexFuel	(MS)	01/06→		RUN62D	MAG62D	ETS62ND	ETS60D3N	438320ES
S40 II 2.0	(MS)	10/06→		RUN62D	MAG62D	ETS62ND	ETS60D3N	438320ES
S40 II 2.4	(MS)	01/04→		RUN62D	MAG62D	ETS62ND	ETS60D3N	438320ES
S40 II 2.4	(MS)	01/04→		RUN62D	MAG62D	ETS62ND	ETS60D3N	438320ES
S40 II 2.4 AWD	(MS)	08/06→		RUN62D	MAG62D	ETS62ND	ETS60D3N	438320ES
S40 II T5	(MS)	01/04→		RUN62D	MAG62D	ETS62ND	ETS60D3N	438320ES
S40 II T5 AWD	(MS)	04/04→		RUN62D	MAG62D	ETS62ND	ETS60D3N	438320ES
S40 II T5	(MS)	03/07→		RUN62D	MAG62D	ETS62ND	ETS60D3N	438320ES
S40 II T5 AWD	(MS)	03/07→		RUN62D	MAG62D	ETS62ND	ETS60D3N	438320ES
V50 1.6	(MW)	01/05→			MAG62DB	ETS60NDB-ETS50NDB		ES60NDB
V50 1.6	Stop/Start , A	10/08→	AGM80D					
V50 1.8	(MW)	04/04→			MAG62DB	ETS60NDB-ETS50NDB		ES60NDB
V50 1.8 FlexFuel	(MW)	01/05→		RUN62D	MAG62D	ETS62ND	ETS60D3N	438320ES
V50 2.0	(MW)	10/06→		RUN62D	MAG62D	ETS62ND	ETS60D3N	438320ES
V50 2.4	(MW)	04/04→			MAG72DB	ETS71NDB		
V50 2.4 AWD	(MW)	08/06→			MAG72DB	ETS71NDB		
V50 2.4	(MW)	04/04→			MAG72DB	ETS71NDB		
V50 T5	(MW)	04/04→			MAG72DB	ETS71NDB		
V50 T5 AWD	(MW)	04/04→			MAG72DB	ETS71NDB		
V50 T5	(MW)	03/07→			MAG72DB	ETS71NDB		
V50 T5 AWD	(MW)	03/07→			MAG72DB	ETS71NDB		
S60 2.0 T		09/01→	AGM70D	RUN72D	MAG74D	ETS74ND	ETS70D1N-ETS74DI	476420ES
S60 T5		11/00→		RUN72D	MAG74D	ETS74ND	ETS70D1N-ETS74DI	476420ES
S60 2.3 T5		07/00→09/02		RUN72D	MAG74D	ETS74ND	ETS70D1N-ETS74DI	476420ES
S60 2.4 T5		04/04→		RUN72D	MAG74D	ETS74ND	ETS70D1N-ETS74DI	476420ES
S60 2.4 AWD		02/04→		RUN72D	MAG74D	ETS74ND	ETS70D1N-ETS74DI	476420ES
S60 2.4		11/00→	AGM70D	RUN72D	MAG74D	ETS74ND	ETS70D1N-ETS74DI	476420ES
S60 2.4 Bifuel		06/02→		RUN72D	MAG74D	ETS74ND	ETS70D1N-ETS74DI	476420ES
S60 2.4		11/00→		RUN72D	MAG74D	ETS74ND	ETS70D1N-ETS74DI	476420ES
S60 2.4 T		11/00→		RUN72D	MAG74D	ETS74ND	ETS70D1N-ETS74DI	476420ES
S60 2.4 T AWD		11/01→		RUN72D	MAG74D	ETS74ND	ETS70D1N-ETS74DI	476420ES
S60 2.5 T		02/04→		RUN72D	MAG74D	ETS74ND	ETS70D1N-ETS74DI	476420ES
S60 2.5 T AWD		04/04→		RUN72D	MAG74D	ETS74ND	ETS70D1N-ETS74DI	476420ES
S60 R 2,5 T AWD		03/03→		RUN72D	MAG74D	ETS74ND	ETS70D1N-ETS74DI	476420ES
S60 2.4 D		09/05→		RUN95D		ETS92ND-ETS95D1N		434440ES
S60 2.4 D		12/01→		RUN95D		ETS92ND-ETS95D1N		434440ES
S60 2.4 D5		07/01→		RUN95D		ETS92ND-ETS95D1N		434440ES
S60 2.4 D5		09/05→		RUN95D		ETS92ND-ETS95D1N		434440ES
S60 II T3		04/10→		RUN72D	MAG74D	ETS74ND	ETS70D1N-ETS74DI	476420ES
S60 II T4		04/10→		RUN72D	MAG74D	ETS74ND	ETS70D1N-ETS74DI	476420ES
S60 II 2.0 T		04/10→		RUN72D	MAG74D	ETS74ND	ETS70D1N-ETS74DI	476420ES
S60 II T5		04/10→		RUN72D	MAG74D	ETS74ND	ETS70D1N-ETS74DI	476420ES

	Design		START	RUN	MAGIS	ETS	ETS alternative	ES
VOLVO								
S60 II T6 AWD		04/10→		RUN72D	MAG74D	ETS74ND	ETS70D1N-ETS74DI	476420ES
S60 II D3		04/10→		RUN72D	MAG74D	ETS74ND	ETS70D1N-ETS74DI	476420ES
S60 II D5		04/10→		RUN95D				
S60 II D5 AWD		04/10→		RUN95D				
XC60 T6 AWD		05/08→		RUN72D	MAG74D	ETS74ND	ETS70D1N-ETS74DI	476420ES
XC60 T6 AWD		03/10→		RUN72D				
XC60 3.2 AWD		07/09→		RUN72D	MAG74D	ETS74ND	ETS70D1N-ETS74DI	476420ES
S70 2.0	(P80_)	01/97→11/00		RUN62D	MAG62D	ETS62ND	ETS60D3N	438320ES
S70 2.0	(P80_)	01/97→11/00		RUN62D	MAG62D	ETS62ND	ETS60D3N	438320ES
S70 2.0	(P80_)	01/97→11/00		RUN62D	MAG62D	ETS62ND	ETS60D3N	438320ES
S70 2.0	(P80_)	01/97→11/00		RUN62D	MAG62D	ETS62ND	ETS60D3N	438320ES
S70 2.0 Turbo	(P80_)	01/97→11/00		RUN62D	MAG62D	ETS62ND	ETS60D3N	438320ES
S70 2.0 Turbo	(P80_)	01/97→11/00		RUN62D	MAG62D	ETS62ND	ETS60D3N	438320ES
S70 2.3 T-5	(P80_)	01/97→11/00		RUN62D	MAG62D	ETS62ND	ETS60D3N	438320ES
S70 2.3 Turbo	(P80_)	01/97→11/00		RUN62D	MAG62D	ETS62ND	ETS60D3N	438320ES
S70 2.3	(P80_)	04/99→09/00		RUN62D	MAG62D	ETS62ND	ETS60D3N	438320ES
S70 2.4	(P80_)	08/99→11/00		RUN62D	MAG62D	ETS62ND	ETS60D3N	438320ES
S70 2.4 AWD	(P80_)	04/99→09/00		RUN62D	MAG62D	ETS62ND	ETS60D3N	438320ES
S70 2.4 Blu-Fuel	(P80_)	07/97→09/00		RUN62D	MAG62D	ETS62ND	ETS60D3N	438320ES
S70 2.5 Bifuel	(P80_)	07/99→11/00		RUN72D	MAG74D	ETS74ND	ETS70D1N-ETS74DI	476420ES
S70 2.5	(P80_)	01/97→11/00		RUN72D	MAG74D	ETS74ND	ETS70D1N-ETS74DI	476420ES
S70 2.5 Bifuel	(P80_)	10/98→11/00		RUN72D	MAG74D	ETS74ND	ETS70D1N-ETS74DI	476420ES
S70 2.4 AWD	(P80_)	11/96→05/99		RUN62D	MAG62D	ETS62ND	ETS60D3N	438320ES
S70 2.5	(P80_)	06/98→11/00		RUN72D	MAG74D	ETS74ND	ETS70D1N-ETS74DI	476420ES
S70 2.4 AWD	(P80_)	10/98→05/99		RUN62D	MAG62D	ETS62ND	ETS60D3N	438320ES
S70 2.4	(P80_)	01/97→11/00		RUN72D	MAG74D	ETS74ND	ETS70D1N-ETS74DI	476420ES
S70 2.4 AWD	(P80_)	04/99→09/00		RUN62D	MAG62D	ETS62ND	ETS60D3N	438320ES
S70 2.4 Turbo	(P80_)	01/97→11/00		RUN72D	MAG74D	ETS74ND	ETS70D1N-ETS74DI	476420ES
S70 2.4 T5 AWD	(P80_)	11/96→04/99		RUN62D	MAG62D	ETS62ND	ETS60D3N	438320ES
S70 2.5 TDI	(P80_)	01/97→11/00	AGM70D	RUN95D		ETS92ND-ETS95D1N		434440ES
S70 2.5 TDi AWD	(P80_)	10/99→09/00		RUN72D	MAG74D	ETS74ND	ETS70D1N-ETS74DI	476420ES
C70 I Coupe 2.0 T		03/00→09/02		RUN62D	MAG62D	ETS62ND	ETS60D3N	438320ES
C70 I Coupe 2.0		03/97→09/02		RUN72D	MAG74D	ETS74ND	ETS70D1N-ETS74DI	476420ES
C70 I Coupe 2.0 T		03/97→09/02		RUN72D	MAG74D	ETS74ND	ETS70D1N-ETS74DI	476420ES
C70 I Coupe 2.3 T-5		03/97→09/02		RUN72D	MAG74D	ETS74ND	ETS70D1N-ETS74DI	476420ES
C70 I Coupe 2.5		03/99→09/02		RUN72D	MAG74D	ETS74ND	ETS70D1N-ETS74DI	476420ES
C70 I Coupe 2.5		05/99→09/02		RUN72D	MAG74D	ETS74ND	ETS70D1N-ETS74DI	476420ES
C70 I Coupe 2.5 T		03/97→09/02		RUN72D	MAG74D	ETS74ND	ETS70D1N-ETS74DI	476420ES
C70 I Convertible 2.0 T		03/00→10/05		RUN62D	MAG62D	ETS62ND	ETS60D3N	438320ES
C70 I Convertible 2.0		03/98→10/05		RUN62D	MAG62D	ETS62ND	ETS60D3N	438320ES
C70 I Convertible 2.0 T		03/98→10/05		RUN62D	MAG62D	ETS62ND	ETS60D3N	438320ES
C70 I Convertible 2.3 T-5		03/98→10/05		RUN62D	MAG62D	ETS62ND	ETS60D3N	438320ES
C70 I Convertible 2.3 T5		07/02→10/05		RUN72D	MAG74D	ETS74ND	ETS70D1N-ETS74DI	476420ES
C70 I Convertible 2.5		06/98→10/05		RUN72D	MAG74D	ETS74ND	ETS70D1N-ETS74DI	476420ES
C70 I Convertible 2.5 T		03/98→10/05		RUN72D	MAG74D	ETS74ND	ETS70D1N-ETS74DI	476420ES
C70 I Convertible 2.4 T		07/02→10/05		RUN72D	MAG74D	ETS74ND	ETS70D1N-ETS74DI	476420ES
C70 II Convertible 2.4		03/06→		RUN72D	MAG74D	ETS74ND	ETS70D1N-ETS74DI	476420ES

	Design		START	RUN	MAGIS	ETS	ETS alternative	ES
VOLVO								
C70 II Convertible 2.4 i		03/06→		RUN72D	MAG74D	ETS74ND	ETS70D1N-ETS74DI	476420ES
C70 II Convertible T5		03/06→		RUN72D	MAG74D	ETS74ND	ETS70D1N-ETS74DI	476420ES
C70 II Convertible 2.0 D		01/08→			MAG82D	ETS80ND		
C70 II Convertible T5		03/07→		RUN62D	MAG62D	ETS62ND	ETS60D3N	438320ES
V70 I Estate 2.0	(P80_)	01/97→03/00		RUN62D	MAG62D	ETS62ND	ETS60D3N	438320ES
V70 I Estate 2.0	(P80_)	01/97→03/00		RUN62D	MAG62D	ETS62ND	ETS60D3N	438320ES
V70 I Estate 2.0	(P80_)	01/97→03/00		RUN62D	MAG62D	ETS62ND	ETS60D3N	438320ES
V70 I Estate 2.0	(P80_)	01/97→03/00		RUN62D	MAG62D	ETS62ND	ETS60D3N	438320ES
V70 I Estate 2.0 Turbo	(P80_)	01/97→03/00		RUN62D	MAG62D	ETS62ND	ETS60D3N	438320ES
V70 I Estate 2.0 Turbo	(P80_)	01/97→03/00		RUN62D	MAG62D	ETS62ND	ETS60D3N	438320ES
V70 I Estate 2.0 Turbo AWD	(P80_)	01/97→03/00		RUN72D	MAG74D	ETS74ND	ETS70D1N-ETS74DI	476420ES
V70 I Estate 2.3 T-5	(P80_)	01/97→03/00		RUN62D	MAG62D	ETS62ND	ETS60D3N	438320ES
V70 I Estate 2.3 T-5 AWD	(P80_)	01/97→03/00		RUN62D	MAG62D	ETS62ND	ETS60D3N	438320ES
V70 I Estate 2.3 AWD	(P80_)	04/97→09/98		RUN62D	MAG62D	ETS62ND	ETS60D3N	438320ES
V70 I Estate 2.3 Turbo	(P80_)	01/97→03/00		RUN62D	MAG62D	ETS62ND	ETS60D3N	438320ES
V70 I Estate 2.3 T AWD	(P80_)	04/97→03/00		RUN62D	MAG62D	ETS62ND	ETS60D3N	438320ES
V70 I Estate 2.4	(P80_)	08/99→05/00		RUN62D	MAG62D	ETS62ND	ETS60D3N	438320ES
V70 I Estate 2.4 Bifuel	(P80_)	08/99→03/00		RUN62D	MAG62D	ETS62ND	ETS60D3N	438320ES
V70 I Estate 2.5	(P80_)	01/97→03/00		RUN72D	MAG74D	ETS74ND	ETS70D1N-ETS74DI	476420ES
V70 I Estate 2.5 Bifuel	(P80_)	10/98→08/99		RUN72D	MAG74D	ETS74ND	ETS70D1N-ETS74DI	476420ES
V70 I Estate 2.5	(P80_)	06/98→03/00		RUN72D	MAG74D	ETS74ND	ETS70D1N-ETS74DI	476420ES
V70 I Estate 2.4 AWD	(P80_)	10/98→05/99		RUN62D	MAG62D	ETS62ND	ETS60D3N	438320ES
V70 I Estate 2.4	(P80_)	01/97→05/00		RUN62D	MAG62D	ETS62ND	ETS60D3N	438320ES
V70 I Estate 2.4 Turbo	(P80_)	01/97→03/00		RUN62D	MAG62D	ETS62ND	ETS60D3N	438320ES
V70 I Estate 2.5 Turbo AWD	(P80_)	01/97→05/00		RUN72D	MAG74D	ETS74ND	ETS70D1N-ETS74DI	476420ES
V70 I Estate 2.5 TDi AWD	(P80_)	11/96→02/00		RUN72D	MAG74D	ETS74ND	ETS70D1N-ETS74DI	476420ES
V70 I Estate 2.5 AWD	(P80_)	03/99→03/00		RUN72D	MAG74D	ETS74ND	ETS70D1N-ETS74DI	476420ES
V70 I Estate 2.5 TDI	(P80_)	01/97→05/00		RUN95D		ETS92ND-ETS95D1N		434440ES
V70 II Estate 2.0 T	(P80_)	07/01→	AGM70D	RUN62D				
V70 II Estate 2.3 T5	(P80_)	03/00→	AGM70D	RUN72D				
V70 II Estate 2.3	(P80_)	10/00→09/04		RUN95D		ETS92ND-ETS95D1N		434440ES
V70 II Estate 2.3 AWD	(P80_)	10/00→09/04		RUN95D		ETS92ND-ETS95D1N		434440ES
V70 II Estate 2.4 T5	(P80_)	04/04→		RUN95D		ETS92ND-ETS95D1N		434440ES
V70 II Estate 2.4	(P80_)	03/00→		RUN95D		ETS92ND-ETS95D1N		434440ES
V70 II Estate 2.4 Bifuel	(P80_)	09/01→		RUN95D		ETS92ND-ETS95D1N		434440ES
V70 II Estate 2.4 AWD	(P80_)	03/00→09/03		RUN95D		ETS92ND-ETS95D1N		434440ES
V70 II Estate 2.4	(P80_)	03/00→09/03		RUN95D		ETS92ND-ETS95D1N		434440ES
V70 II Estate 2.4	(P80_)	03/00→		RUN95D		ETS92ND-ETS95D1N		434440ES
V70 II Estate 2.4 T	(P80_)	03/00→		RUN62D				
V70 II Estate 2.4 T AWD	(P80_)	09/01→		RUN95D		ETS92ND-ETS95D1N		434440ES
V70 II Estate 2.5 T	(P80_)	08/07→		RUN95D		ETS92ND-ETS95D1N		434440ES
V70 II Estate 2.5 T	(P80_)	04/04→		RUN95D		ETS92ND-ETS95D1N		434440ES
V70 II Estate 2.5 T AWD	(P80_)	09/02→	AGM70D	RUN95D		ETS92ND-ETS95D1N		434440ES
V70 II Estate 2.5 R Sport	(P80_)	12/02→		RUN95D		ETS92ND-ETS95D1N		434440ES
V70 II Estate R 2,5 T AWD	(P80_)	03/03→		RUN95D		ETS92ND-ETS95D1N		434440ES
V70 II Estate 2.4 D	(P80_)	05/05→		RUN95D		ETS92ND-ETS95D1N		434440ES
V70 II Estate 2.4 D	(P80_)	12/01→		RUN95D		ETS92ND-ETS95D1N		434440ES

	Design		START	RUN	MAGIS	ETS	ETS alternative	ES
VOLVO								
V70 II Estate 2.4 D5	(P80_)	08/01→	AGM80D	RUN95D		ETS92ND-ETS95D1N		434440ES
V70 II Estate 2.4 D5 AWD	(P80_)	03/03→		RUN95D		ETS92ND-ETS95D1N		434440ES
V70 II Estate 2.4 D5	(P80_)	12/05→		RUN95D		ETS92ND-ETS95D1N		434440ES
V70 II Estate 2.4 D5 AWD	(P80_)	12/05→		RUN95D		ETS92ND-ETS95D1N		434440ES
V70 II Estate 2.5 TDI	(P80_)	03/00→	AGM80D	RUN95D		ETS92ND-ETS95D1N		434440ES
V70 III Estate 2.0 FlexiFuel		01/08→		RUN72D	MAG74D	ETS74ND	ETS70D1N-ETS74DI	476420ES
XC70 CROSS COUNTRY 2.4 AWD		03/00→09/03		RUN72D	MAG74D	ETS74ND	ETS70D1N-ETS74DI	476420ES
XC70 CROSS COUNTRY 2.4 T XC AWD		11/97→09/02	AGM70D	RUN72D	MAG74D	ETS74ND	ETS70D1N-ETS74DI	476420ES
XC70 CROSS COUNTRY 2.4 T XC AWD		03/00→09/02		RUN72D	MAG74D	ETS74ND	ETS70D1N-ETS74DI	476420ES
XC70 CROSS COUNTRY 2.5 T XC AWD		09/02→	AGM70D	RUN72D				
XC70 CROSS COUNTRY 2.4 D5 XC AWD		09/02→	AGM90D	RUN95D		ETS92ND-ETS95D1N		434440ES
XC70 CROSS COUNTRY 2.4 D5 AWD		12/05→		RUN95D		ETS92ND-ETS95D1N		434440ES
S80 2.0	(TS, XY)	06/98→07/06		RUN72D	MAG74D	ETS74ND	ETS70D1N-ETS74DI	476420ES
S80 2.0 T	(TS, XY)	12/99→07/06		RUN72D	MAG74D	ETS74ND	ETS70D1N-ETS74DI	476420ES
S80 2.0 T	(TS, XY)	06/98→07/06		RUN72D	MAG74D	ETS74ND	ETS70D1N-ETS74DI	476420ES
S80 2.4	(TS, XY)	01/99→07/06		RUN72D	MAG74D	ETS74ND	ETS70D1N-ETS74DI	476420ES
S80 2.4 Bifuel	(TS, XY)	09/01→07/06		RUN72D	MAG74D	ETS74ND	ETS70D1N-ETS74DI	476420ES
S80 2.4	(TS, XY)	01/99→07/06		RUN72D	MAG74D	ETS74ND	ETS70D1N-ETS74DI	476420ES
S80 2.4 T	(TS, XY)	06/00→07/06		RUN72D	MAG74D	ETS74ND	ETS70D1N-ETS74DI	476420ES
S80 2.4 T5 AWD	(TS, XY)	04/00→09/03		RUN72D	MAG74D	ETS74ND	ETS70D1N-ETS74DI	476420ES
S80 2.5 T	(TS, XY)	03/03→07/06		RUN72D	MAG74D	ETS74ND	ETS70D1N-ETS74DI	476420ES
S80 2.5 T AWD	(TS, XY)	07/03→07/06		RUN72D	MAG74D	ETS74ND	ETS70D1N-ETS74DI	476420ES
S80 2.8 T6	(TS, XY)	05/98→07/06		RUN72D	MAG74D	ETS74ND	ETS70D1N-ETS74DI	476420ES
S80 3.0	(TS, XY)	06/01→07/06		RUN72D	MAG74D	ETS74ND	ETS70D1N-ETS74DI	476420ES
S80 2.9	(TS, XY)	03/99→07/06		RUN72D	MAG74D	ETS74ND	ETS70D1N-ETS74DI	476420ES
S80 2.9	(TS, XY)	05/98→07/06		RUN72D	MAG74D	ETS74ND	ETS70D1N-ETS74DI	476420ES
S80 3.0 T6	(TS, XY)	06/01→07/06		RUN72D	MAG74D	ETS74ND	ETS70D1N-ETS74DI	476420ES
S80 2.4 D	(TS, XY)	10/01→07/06		RUN95D		ETS92ND-ETS95D1N		434440ES
S80 2.4 D5	(TS, XY)	08/01→07/06		RUN95D		ETS92ND-ETS95D1N		434440ES
S80 2.5 TDI	(TS, XY)	01/99→07/06		RUN95D		ETS92ND-ETS95D1N		434440ES
S80 II 2.0 FlexFuel		01/08→		RUN62D	MAG62D	ETS62ND	ETS60D3N	438320ES
S80 II 2.5 T		03/06→		RUN72D	MAG74D	ETS74ND	ETS70D1N-ETS74DI	476420ES
S80 II 2.5 T AWD		10/06→		RUN62D	MAG62D	ETS62ND	ETS60D3N	438320ES
S80 II 2.5 T FlexFuel		05/08→		RUN62D	MAG62D	ETS62ND	ETS60D3N	438320ES
S80 II 2.5 T FlexFuel		01/10→		RUN72D	MAG74D	ETS74ND	ETS70D1N-ETS74DI	476420ES
S80 II T6 AWD		01/07→		RUN72D	MAG74D	ETS74ND	ETS70D1N-ETS74DI	476420ES
S80 II 3.2		03/06→		RUN72D	MAG74D	ETS74ND	ETS70D1N-ETS74DI	476420ES
S80 II 3.2 AWD		01/07→		RUN72D	MAG74D	ETS74ND	ETS70D1N-ETS74DI	476420ES
S80 II 4.4		08/06→		RUN72D	MAG74D	ETS74ND	ETS70D1N-ETS74DI	476420ES
S80 II 4.4 V8 AWD		03/06→		RUN72D	MAG74D	ETS74ND	ETS70D1N-ETS74DI	476420ES
S80 II 1.6 D DRIVe		01/10→		RUN72D	MAG74D	ETS74ND	ETS70D1N-ETS74DI	476420ES
S80 II 2.0 TDi		02/08→		RUN72D	MAG74D	ETS74ND	ETS70D1N-ETS74DI	476420ES
S80 II 2.4 D		03/06→		RUN95D		ETS92ND-ETS95D1N		434440ES
S80 II 2.4 D		01/10→		RUN95D				
S80 II D5		03/06→		RUN95D		ETS92ND-ETS95D1N		434440ES
S80 II D5 AWD		01/07→		RUN95D		ETS92ND-ETS95D1N		434440ES
S80 II D5		01/10→		RUN95D				

	Design		START	RUN	MAGIS	ETS	ETS alternative	ES
VOLVO								
S80 II D5 AWD		01/10→		RUN95D				
S90 2.5		11/96→10/98		RUN62D	MAG62D	ETS62ND	ETS60D3N	438320ES
S90 2.9		01/97→05/98		RUN72D	MAG74D	ETS74ND	ETS70D1N-ETS74DI	476420ES
S90 2.5		11/96→10/97		RUN62D	MAG62D	ETS62ND	ETS60D3N	438320ES
S90 2.9		01/97→05/98		RUN72D	MAG74D	ETS74ND	ETS70D1N-ETS74DI	476420ES
V90 Estate 2.5		11/96→10/98		RUN62D	MAG62D	ETS62ND	ETS60D3N	438320ES
V90 Estate 2.9		01/97→12/98		RUN72D	MAG74D	ETS74ND	ETS70D1N-ETS74DI	476420ES
V90 Estate 2.5		11/96→10/97		RUN62D	MAG62D	ETS62ND	ETS60D3N	438320ES
V90 Estate 2.9		01/97→12/98		RUN72D	MAG74D	ETS74ND	ETS70D1N-ETS74DI	476420ES
XC 90 2.5 T		10/02→	AGM70D	RUN72D				
XC 90 2.9 T6		10/02→	AGM70D	RUN72D				
XC 90 4.5 V8		01/05→	AGM70D	RUN72D				
XC 90 D5		04/09→		RUN95D		ETS92ND-ETS95D1N		434440ES
XC 90 2.4 D5		10/02→	AGM90D	RUN95D		ETS92ND-ETS95D1N		434440ES
XC 90 D5		05/06→		RUN95D		ETS92ND-ETS95D1N		434440ES
XC 90 3.2		05/06→	AGM70D	RUN72D				
240 Kombi 2.3 CAT	(P245)	08/91→07/92		RUN72D	MAG74D	ETS74ND	ETS70D1N-ETS74DI	476420ES
440 K 1.6	(445)	09/91→08/93		RUN62D	MAG62D	ETS62ND	ETS60D3N	438320ES
440 K 1.7 Turbo	(445)	01/91→12/96		RUN62D	MAG62D	ETS62ND	ETS60D3N	438320ES
440 K 1.8	(445)	09/95→12/96		RUN62D	MAG62D	ETS62ND	ETS60D3N	438320ES
440 K 1.8	(445)	08/91→07/96		RUN62D	MAG62D	ETS62ND	ETS60D3N	438320ES
440 K 2.0	(445)	08/93→07/96		RUN62D	MAG62D	ETS62ND	ETS60D3N	438320ES
440 K 2.0	(445)	08/92→07/95		RUN62D	MAG62D	ETS62ND	ETS60D3N	438320ES
440 K 1.9 Turbo-Diesel	(445)	07/94→12/96		RUN95D		ETS92ND-ETS95D1N		434440ES
460 L 1.6	(464)	07/92→07/96		RUN62D	MAG62D	ETS62ND	ETS60D3N	438320ES
460 L 1.7	(464)	09/90→07/96		RUN62D	MAG62D	ETS62ND	ETS60D3N	438320ES
460 L 1.7 Turbo	(464)	01/91→07/96		RUN62D	MAG62D	ETS62ND	ETS60D3N	438320ES
460 L 1.8	(464)	08/91→07/96		RUN62D	MAG62D	ETS62ND	ETS60D3N	438320ES
460 L 2.0	(464)	08/93→07/96		RUN62D	MAG62D	ETS62ND	ETS60D3N	438320ES
460 L 2.0	(464)	08/92→07/95		RUN62D	MAG62D	ETS62ND	ETS60D3N	438320ES
460 L 1.9 Turbo-Diesel	(464)	07/94→07/96		RUN72D	MAG74D	ETS74ND	ETS70D1N-ETS74DI	476420ES
480 E 1.7 Turbo		01/91→07/96		RUN62D	MAG62D	ETS62ND	ETS60D3N	438320ES
480 E 2.0		08/92→09/95		RUN62D	MAG62D	ETS62ND	ETS60D3N	438320ES
740 2.0	(744)	09/90→08/92		RUN62D	MAG62D	ETS62ND	ETS60D3N	438320ES
740 2.0 Turbo	(744)	09/90→08/91		RUN62D	MAG62D	ETS62ND	ETS60D3N	438320ES
740 2.0	(744)	09/90→08/92		RUN62D	MAG62D	ETS62ND	ETS60D3N	438320ES
740 Kombi 2.0 Turbo	(745)	09/90→08/91		RUN62D	MAG62D	ETS62ND	ETS60D3N	438320ES
740 Kombi 2.0	(745)	09/90→08/92		RUN62D	MAG62D	ETS62ND	ETS60D3N	438320ES
850 2.0	(LS)	08/94→12/96		RUN62D	MAG62D	ETS62ND	ETS60D3N	438320ES
850 2.0	(LS)	06/91→12/96		RUN62D	MAG62D	ETS62ND	ETS60D3N	438320ES
850 2.0 Turbo	(LS)	08/93→12/96		RUN62D	MAG62D	ETS62ND	ETS60D3N	438320ES
850 2.3 T5	(LS)	08/93→07/96		RUN62D	MAG62D	ETS62ND	ETS60D3N	438320ES
850 2.3 T5-R	(LS)	08/95→12/96		RUN72D	MAG74D	ETS74ND	ETS70D1N-ETS74DI	476420ES
850 2.5	(LS)	06/91→07/94		RUN62D	MAG62D	ETS62ND	ETS60D3N	438320ES
850 2.5	(LS)	08/94→12/96		RUN62D	MAG62D	ETS62ND	ETS60D3N	438320ES
850 2.5	(LS)	08/91→12/96		RUN62D	MAG62D	ETS62ND	ETS60D3N	438320ES
850 2.5 TDI	(LS)	08/95→12/96		RUN72D	MAG74D	ETS74ND	ETS70D1N-ETS74DI	476420ES

	Design		START	RUN	MAGIS	ETS	ETS alternative	ES
VOLVO								
850 Estate 2.0	(LW)	08/94→12/96		RUN62D	MAG62D	ETS62ND	ETS60D3N	438320ES
850 Estate 2.0	(LW)	02/93→12/96		RUN62D	MAG62D	ETS62ND	ETS60D3N	438320ES
850 Estate 2.0 Turbo	(LW)	02/93→12/96		RUN62D	MAG62D	ETS62ND	ETS60D3N	438320ES
850 Estate 2.3 T5	(LW)	02/93→12/96		RUN62D	MAG62D	ETS62ND	ETS60D3N	438320ES
850 Estate 2.3 T5-R	(LW)	08/95→12/96		RUN72D	MAG74D	ETS74ND	ETS70D1N-ETS74DI	476420ES
850 Estate 2.5	(LW)	08/92→07/94		RUN62D	MAG62D	ETS62ND	ETS60D3N	438320ES
850 Estate 2.5	(LW)	08/94→12/96		RUN62D	MAG62D	ETS62ND	ETS60D3N	438320ES
850 Estate 2.5	(LW)	09/92→12/96		RUN62D	MAG62D	ETS62ND	ETS60D3N	438320ES
850 Estate 2.5 AWD	(LW)	04/96→12/96		RUN62D	MAG62D	ETS62ND	ETS60D3N	438320ES
850 Estate 2.5 TDI	(LW)	08/95→12/96		RUN72D	MAG74D	ETS74ND	ETS70D1N-ETS74DI	476420ES
940 2.0	(944)	01/92→07/94		RUN62D	MAG62D	ETS62ND	ETS60D3N	438320ES
940 2.0 Turbo	(944)	08/90→12/94		RUN62D	MAG62D	ETS62ND	ETS60D3N	438320ES
940 2.3	(944)	08/92→07/94		RUN62D	MAG62D	ETS62ND	ETS60D3N	438320ES
940 2.3	(944)	08/90→12/94		RUN62D	MAG62D	ETS62ND	ETS60D3N	438320ES
940 2.3	(944)	08/90→07/91		RUN62D	MAG62D	ETS62ND	ETS60D3N	438320ES
940 2.3	(944)	09/90→09/93		RUN62D	MAG62D	ETS62ND	ETS60D3N	438320ES
940 2.3 Turbo	(944)	08/90→07/94		RUN62D	MAG62D	ETS62ND	ETS60D3N	438320ES
940 2.3 Turbo	(944)	08/91→07/93		RUN62D	MAG62D	ETS62ND	ETS60D3N	438320ES
940 2.4 D	(944)	08/90→12/94		RUN72D	MAG74D	ETS74ND	ETS70D1N-ETS74DI	476420ES
940 2.4 Turbo Diesel	(944)	08/90→12/94		RUN72D	MAG74D	ETS74ND	ETS70D1N-ETS74DI	476420ES
940 2.4 TD Intercooler	(944)	08/90→12/94		RUN72D	MAG74D	ETS74ND	ETS70D1N-ETS74DI	476420ES
940 Kombi 2.0	(945)	01/92→07/94		RUN62D	MAG62D	ETS62ND	ETS60D3N	438320ES
940 Kombi 2.0 Turbo	(945)	01/91→07/95		RUN62D	MAG62D	ETS62ND	ETS60D3N	438320ES
940 Kombi 2.3	(945)	08/92→07/94		RUN62D	MAG62D	ETS62ND	ETS60D3N	438320ES
940 Kombi 2.3	(945)	08/90→12/94		RUN62D	MAG62D	ETS62ND	ETS60D3N	438320ES
940 Kombi 2.3	(945)	08/90→07/91		RUN62D	MAG62D	ETS62ND	ETS60D3N	438320ES
940 Kombi 2.3 Turbo	(945)	08/90→07/94		RUN62D	MAG62D	ETS62ND	ETS60D3N	438320ES
940 Kombi 2.3 Turbo	(945)	08/91→07/93		RUN62D	MAG62D	ETS62ND	ETS60D3N	438320ES
940 Kombi 2.4 D	(945)	08/90→07/95		RUN72D	MAG74D	ETS74ND	ETS70D1N-ETS74DI	476420ES
940 Kombi 2.4 Turbo Diesel	(945)	08/90→07/94		RUN72D	MAG74D	ETS74ND	ETS70D1N-ETS74DI	476420ES
940 Kombi 2.4 TD Intercooler	(945)	08/90→08/94		RUN72D	MAG74D	ETS74ND	ETS70D1N-ETS74DI	476420ES
940 II 2.0 Turbo	(944)	04/96→10/98		RUN62D	MAG62D	ETS62ND	ETS60D3N	438320ES
940 II 2.3	(944)	08/94→07/95		RUN62D	MAG62D	ETS62ND	ETS60D3N	438320ES
940 II 2.3	(944)	08/94→10/98		RUN62D	MAG62D	ETS62ND	ETS60D3N	438320ES
940 II 2.3 ti	(944)	01/95→10/98		RUN62D	MAG62D	ETS62ND	ETS60D3N	438320ES
940 II 2.3 Turbo	(944)	08/94→10/98		RUN62D	MAG62D	ETS62ND	ETS60D3N	438320ES
940 II 2.4 TD Interc.	(944)	08/94→10/98		RUN72D	MAG74D	ETS74ND	ETS70D1N-ETS74DI	476420ES
940 II Estate 2.0 Turbo	(945)	04/96→10/98		RUN62D	MAG62D	ETS62ND	ETS60D3N	438320ES
940 II Estate 2.3	(945)	08/94→07/95		RUN62D	MAG62D	ETS62ND	ETS60D3N	438320ES
940 II Estate 2.3	(945)	08/94→10/98		RUN62D	MAG62D	ETS62ND	ETS60D3N	438320ES
940 II Estate 2.3 ti	(945)	01/95→10/98		RUN62D	MAG62D	ETS62ND	ETS60D3N	438320ES
940 II Estate 2.3 Turbo	(945)	08/94→10/98		RUN62D	MAG62D	ETS62ND	ETS60D3N	438320ES
940 II Estate 2.3 Turbo	(945)	08/95→10/98		RUN62D	MAG62D	ETS62ND	ETS60D3N	438320ES
940 II Estate 2.4 TD Interc.	(945)	08/94→10/98		RUN72D	MAG74D	ETS74ND	ETS70D1N-ETS74DI	476420ES
960 2.0	(964)	09/90→09/93		RUN62D	MAG62D	ETS62ND	ETS60D3N	438320ES
960 2.0	(964)	09/90→08/93		RUN62D	MAG62D	ETS62ND	ETS60D3N	438320ES
960 2.0	(964)	08/90→09/93		RUN62D	MAG62D	ETS62ND	ETS60D3N	438320ES

	Design		START	RUN	MAGIS	ETS	ETS alternative	ES
VOLVO								
960 2.9	(964)	08/90→07/94		RUN72D	MAG74D	ETS74ND	ETS70D1N-ETS74DI	476420ES
960 2.4 TD Interc.	(964)	09/91→07/94		RUN72D	MAG74D	ETS74ND	ETS70D1N-ETS74DI	476420ES
960 Kombi 2.0	(965)	09/90→08/93		RUN62D	MAG62D	ETS62ND	ETS60D3N	438320ES
960 Kombi 2.0	(965)	08/90→09/93		RUN62D	MAG62D	ETS62ND	ETS60D3N	438320ES
960 Kombi 2.9	(965)	08/90→07/94		RUN72D	MAG74D	ETS74ND	ETS70D1N-ETS74DI	476420ES
960 Kombi 2.4 TD Interc.	(965)	09/91→07/94		RUN72D	MAG74D	ETS74ND	ETS70D1N-ETS74DI	476420ES
960 II 2.5	(964)	07/94→12/96		RUN72D	MAG74D	ETS74ND	ETS70D1N-ETS74DI	476420ES
960 II 2.9	(964)	07/94→12/96		RUN72D	MAG74D	ETS74ND	ETS70D1N-ETS74DI	476420ES
960 II Estate 2.5	(965)	08/94→12/96		RUN72D	MAG74D	ETS74ND	ETS70D1N-ETS74DI	476420ES
960 II Estate 2.9	(965)	09/94→12/96		RUN72D	MAG74D	ETS74ND	ETS70D1N-ETS74DI	476420ES
VOLKSWAGEN								
BORA 1.4 16V	(1J2)	03/00→05/05		RUN50D	MAG50D	ETS50ND	ETS50D3N-ETS50D4N	
BORA 1.6	(1J2)	10/98→05/05		RUN62D	MAG62D	ETS62ND	ETS60D3N	438320ES
BORA 1.6	(1J2)	08/00→05/05		RUN62D	MAG62D	ETS62ND	ETS60D3N	438320ES
BORA 1.6 16V	(1J2)	05/00→05/05		RUN62D	MAG62D	ETS62ND	ETS60D3N	438320ES
BORA 1.6	(1J2)	06/02→10/04		RUN50D	MAG50D-MAG45D	ETS50ND-ETS45ND	ETS50D3N-ETS50D4N	436210ES
BORA 1.6 FSI	(1J2)	01/02→05/05		RUN62D	MAG62D	ETS62ND	ETS60D3N	438320ES
BORA 1.8	(1J2)	10/98→05/05		RUN62D	MAG62D	ETS62ND	ETS60D3N	438320ES
BORA 1.8 4motion	(1J2)	02/99→05/05		RUN62D	MAG62D	ETS62ND	ETS60D3N	438320ES
BORA 1.8 T	(1J2)	05/00→05/05		RUN62D	MAG62D	ETS62ND	ETS60D3N	438320ES
BORA 1.8 T	(1J2)	03/02→05/05		RUN62D	MAG62D	ETS62ND	ETS60D3N	438320ES
BORA 2.0	(1J2)	10/98→05/05		RUN62D	MAG62D	ETS62ND	ETS60D3N	438320ES
BORA 2.0 4motion	(1J2)	04/00→05/05		RUN62D	MAG62D	ETS62ND	ETS60D3N	438320ES
BORA 2.3 V5	(1J2)	10/98→10/00		RUN62D	MAG62D	ETS62ND	ETS60D3N	438320ES
BORA 2.3 V5 4motion	(1J2)	12/98→10/00		RUN62D	MAG62D	ETS62ND	ETS60D3N	438320ES
BORA 2.3 V5	(1J2)	10/00→05/05		RUN62D	MAG62D	ETS62ND	ETS60D3N	438320ES
BORA 2.3 V5 4motion	(1J2)	10/00→05/05		RUN62D	MAG62D	ETS62ND	ETS60D3N	438320ES
BORA 2.8 VR6	(1J2)	08/02→07/05		RUN62D	MAG62D	ETS62ND	ETS60D3N	438320ES
BORA 2.8 VR6	(1J2)	11/98→07/02		RUN62D	MAG62D	ETS62ND	ETS60D3N	438320ES
BORA 2.8 VR6	(1J2)	02/02→07/05		RUN62D	MAG62D	ETS62ND	ETS60D3N	438320ES
BORA 2.8 V6 4motion	(1J2)	03/99→05/05		RUN62D	MAG62D	ETS62ND	ETS60D3N	438320ES
BORA 1.9 SDI	(1J2)	10/98→05/05		RUN72D	MAG74D	ETS74ND	ETS70D1N-ETS74DI	476420ES
BORA 1.9 TDI	(1J2)	10/98→06/01		RUN72D	MAG74D	ETS74ND	ETS70D1N-ETS74DI	476420ES
BORA 1.9 TDI 4motion	(1J2)	02/99→06/01		RUN72D	MAG74D	ETS74ND	ETS70D1N-ETS74DI	476420ES
BORA 1.9 TDI	(1J2)	09/00→05/05		RUN72D	MAG74D	ETS74ND	ETS70D1N-ETS74DI	476420ES
BORA 1.9 TDI 4motion	(1J2)	09/00→05/05		RUN72D	MAG74D	ETS74ND	ETS70D1N-ETS74DI	476420ES
BORA 1.9 TDI	(1J2)	10/98→06/01		RUN72D	MAG74D	ETS74ND	ETS70D1N-ETS74DI	476420ES
BORA 1.9 TDI	(1J2)	12/98→06/01		RUN72D	MAG74D	ETS74ND	ETS70D1N-ETS74DI	476420ES
BORA 1.9 TDI 4motion	(1J2)	02/99→06/01		RUN72D	MAG74D	ETS74ND	ETS70D1N-ETS74DI	476420ES
BORA 1.9 TDI	(1J2)	11/00→05/05		RUN72D	MAG74D	ETS74ND	ETS70D1N-ETS74DI	476420ES
BORA 1.9 TDI 4motion	(1J2)	11/00→05/05		RUN72D	MAG74D	ETS74ND	ETS70D1N-ETS74DI	476420ES
BORA 1.9 TDI	(1J2)	05/00→05/05		RUN72D	MAG74D	ETS74ND	ETS70D1N-ETS74DI	476420ES
BORA 1.9 TDI 4motion	(1J2)	05/00→05/05		RUN72D	MAG74D	ETS74ND	ETS70D1N-ETS74DI	476420ES
BORA Estate 1.4 16V	(1J6)	09/01→05/05		RUN50D	MAG50D	ETS50ND	ETS50D3N-ETS50D4N	
BORA Estate 1.6	(1J6)	05/99→05/05		RUN62D	MAG62D	ETS62ND	ETS60D3N	438320ES
BORA Estate 1.6	(1J6)	08/00→05/05		RUN62D	MAG62D	ETS62ND	ETS60D3N	438320ES

	Design		START	RUN	MAGIS	ETS	ETS alternative	ES
VOLKSWAGEN								
BORA Estate 1.6 16V	(1J6)	02/00→05/05		RUN62D	MAG62D	ETS62ND	ETS60D3N	438320ES
BORA Estate 1.6 FSI	(1J6)	01/02→05/05		RUN62D	MAG62D	ETS62ND	ETS60D3N	438320ES
BORA Estate 1.8 4motion	(1J6)	05/99→05/05		RUN62D	MAG62D	ETS62ND	ETS60D3N	438320ES
BORA Estate 1.8 T	(1J6)	05/00→05/05		RUN62D	MAG62D	ETS62ND	ETS60D3N	438320ES
BORA Estate 1.8 T	(1J6)	05/02→05/05		RUN62D	MAG62D	ETS62ND	ETS60D3N	438320ES
BORA Estate 2.0	(1J6)	05/99→05/05		RUN62D	MAG62D	ETS62ND	ETS60D3N	438320ES
BORA Estate 2.0 4motion	(1J6)	04/00→05/05		RUN62D	MAG62D	ETS62ND	ETS60D3N	438320ES
BORA Estate 2.3 V5	(1J6)	05/99→10/00		RUN62D	MAG62D	ETS62ND	ETS60D3N	438320ES
BORA Estate 2.3 V5 4motion	(1J6)	05/99→10/00		RUN62D	MAG62D	ETS62ND	ETS60D3N	438320ES
BORA Estate 2.3 V5	(1J6)	10/00→05/05		RUN62D	MAG62D	ETS62ND	ETS60D3N	438320ES
BORA Estate 2.3 V5 4motion	(1J6)	10/00→05/05		RUN62D	MAG62D	ETS62ND	ETS60D3N	438320ES
BORA Estate 2.8 V6 4motion	(1J6)	05/99→05/05		RUN62D	MAG62D	ETS62ND	ETS60D3N	438320ES
BORA Estate 2.8 VR6	(1J6)	03/00→05/00		RUN62D	MAG62D	ETS62ND	ETS60D3N	438320ES
BORA Estate 1.9 TDI	(1J6)	05/99→06/01		RUN72D	MAG74D	ETS74ND	ETS70D1N-ETS74DI	476420ES
BORA Estate 1.9 TDI	(1J6)	09/00→05/05		RUN72D	MAG74D	ETS74ND	ETS70D1N-ETS74DI	476420ES
BORA Estate 1.9 SDi	(1J6)	06/01→05/05		RUN72D	MAG74D	ETS74ND	ETS70D1N-ETS74DI	476420ES
BORA Estate 1.9 TDI 4motion	(1J6)	09/00→05/05		RUN72D	MAG74D	ETS74ND	ETS70D1N-ETS74DI	476420ES
BORA Estate 1.9 TDI	(1J6)	05/99→06/01		RUN72D	MAG74D	ETS74ND	ETS70D1N-ETS74DI	476420ES
BORA Estate 1.9 TDI	(1J6)	05/99→06/01		RUN72D	MAG74D	ETS74ND	ETS70D1N-ETS74DI	476420ES
BORA Estate 1.9 TDI 4motion	(1J6)	05/99→06/01		RUN72D	MAG74D	ETS74ND	ETS70D1N-ETS74DI	476420ES
BORA Estate 1.9 TDI	(1J6)	11/00→05/05		RUN72D	MAG74D	ETS74ND	ETS70D1N-ETS74DI	476420ES
BORA Estate 1.9 TDI 4motion	(1J6)	11/00→05/05		RUN72D	MAG74D	ETS74ND	ETS70D1N-ETS74DI	476420ES
BORA Estate 1.9 TDI	(1J6)	05/01→05/05		RUN72D	MAG74D	ETS74ND	ETS70D1N-ETS74DI	476420ES
BORA Estate 2.8 VR6	(1J6)	08/02→07/03		RUN62D	MAG62D	ETS62ND	ETS60D3N	438320ES
BORA Estate 1.9 TDI 4motion	(1J6)	05/01→05/05		RUN72D	MAG74D	ETS74ND	ETS70D1N-ETS74DI	476420ES
CADDY II Estate 1.4	(9K9B)	11/95→01/04		RUN50D	MAG50D-MAG45D	ETS50ND-ETS45ND	ETS50D3N-ETS50D4N	436210ES
CADDY II Estate 1.4 16V	(9K9B)	08/00→01/04		RUN50D	MAG50D-MAG45D	ETS50ND-ETS45ND	ETS50D3N-ETS50D4N	436210ES
CADDY II Estate 1.6	(9K9B)	11/95→05/97		RUN50D	MAG50D	ETS50ND	ETS50D3N-ETS50D4N	
CADDY II Estate 1.6	(9K9B)	04/96→07/03		RUN50D	MAG50D-MAG45D	ETS50ND-ETS45ND	ETS50D3N-ETS50D4N	436210ES
CADDY II Estate 1.6	(9K9B)	06/97→09/00		RUN50D	MAG50D	ETS50ND	ETS50D3N-ETS50D4N	
CADDY II Estate 1.7 SDI	(9K9B)	07/96→09/00		RUN72D	MAG74D	ETS74ND	ETS70D1N-ETS74DI	476420ES
CADDY II Estate 1.9 D	(9K9B)	11/95→01/04		RUN72D	MAG74D	ETS74ND	ETS70D1N-ETS74DI	476420ES
CADDY II Estate 1.9 SDI	(9K9B)	11/95→01/04		RUN72D	MAG74D	ETS74ND	ETS70D1N-ETS74DI	476420ES
CADDY II Estate 1.9 TDI	(9K9B)	10/96→01/04		RUN72D	MAG74D	ETS74ND	ETS70D1N-ETS74DI	476420ES
CADDY II Box 60 1.4	(9K9A)	11/95→01/04		RUN50D	MAG50D-MAG45D	ETS50ND-ETS45ND	ETS50D3N-ETS50D4N	436210ES
CADDY II Box 1.4	(9K9A)	08/00→01/04		RUN50D	MAG50D-MAG45D	ETS50ND-ETS45ND	ETS50D3N-ETS50D4N	436210ES
CADDY II Box 75 1.6	(9K9A)	11/95→05/97		RUN50D	MAG50D-MAG45D	ETS50ND-ETS45ND	ETS50D3N-ETS50D4N	436210ES
CADDY II Box 75 1.6	(9K9A)	11/95→09/00		RUN62D	MAG62D	ETS62ND	ETS60D3N	438320ES
CADDY II Box 1.7 SDI	(9K9A)	07/96→09/00		RUN72D	MAG74D	ETS74ND	ETS70D1N-ETS74DI	476420ES
CADDY II Box 1.9 D	(9K9A)	11/95→01/04		RUN72D	MAG74D	ETS74ND	ETS70D1N-ETS74DI	476420ES
CADDY II Box 1.9 SDI	(9K9A)	11/95→01/04		RUN72D	MAG74D	ETS74ND	ETS70D1N-ETS74DI	476420ES
CADDY II Box 1.9 TDI	(9K9A)	09/96→01/04		RUN72D	MAG74D	ETS74ND	ETS70D1N-ETS74DI	476420ES
CADDY II Pickup 1.6	(9U7)	06/96→12/00		RUN50D	MAG50D-MAG45D	ETS50ND-ETS45ND	ETS50D3N-ETS50D4N	436210ES
CADDY II Pickup 1.9 D	(9U7)	06/96→12/00		RUN72D	MAG74D	ETS74ND	ETS70D1N-ETS74DI	476420ES
CADDY III Estate 1.4	(2KB, 2KJ)	03/04→		RUN50D	MAG50D	ETS50ND	ETS50D3N-ETS50D4N	
CADDY III Estate 1.4 16V	(2KB, 2KJ)	05/06→		RUN50D	MAG50D	ETS50ND	ETS50D3N-ETS50D4N	
CADDY III Estate 1.6	(2KB, 2KJ)	03/05→		RUN50D	MAG50D	ETS50ND	ETS50D3N-ETS50D4N	

	Design		START	RUN	MAGIS	ETS	ETS alternative	ES
VOLKSWAGEN								
CADDY III Estate 1.6	(2KB, 2KJ)	04/04→		RUN62D	MAG62D	ETS62ND	ETS60D3N	438320ES
CADDY III Estate 2.0 EcoFuel	(2KB, 2KJ)	04/06→		RUN50D	MAG50D	ETS50ND	ETS50D3N-ETS50D4N	
CADDY III Estate 1.9 TDI	(2KB, 2KJ)	09/05→		RUN72D	MAG74D	ETS74ND	ETS70D1N-ETS74DI	476420ES
CADDY III Estate 1.9 TDI	(2KB, 2KJ)	04/04→		RUN72D	MAG74D	ETS74ND	ETS70D1N-ETS74DI	476420ES
CADDY III Estate 1.9 TDI 4motion	(2KB, 2KJ)	05/08→		RUN72D	MAG74D	ETS74ND	ETS70D1N-ETS74DI	476420ES
CADDY III Estate 2.0 SDI	(2KB, 2KJ)	03/04→		RUN72D	MAG74D	ETS74ND	ETS70D1N-ETS74DI	476420ES
CADDY III Estate 2.0 TDI	(2KB, 2KJ)	09/07→		RUN72D	MAG74D	ETS74ND	ETS70D1N-ETS74DI	476420ES
CADDY III Box 1.4	(2KA, 2KH)	03/04→		RUN50D	MAG50D	ETS50ND	ETS50D3N-ETS50D4N	
CADDY III Box 1.4 16V	(2KA, 2KH)	05/06→		RUN50D	MAG50D	ETS50ND	ETS50D3N-ETS50D4N	
CADDY III Box 1.6	(2KA, 2KH)	04/04→		RUN62D	MAG62D	ETS62ND	ETS60D3N	438320ES
CADDY III Box 2.0 EcoFuel	(2KA, 2KH)	04/06→		RUN50D	MAG50D	ETS50ND	ETS50D3N-ETS50D4N	
CADDY III Box 1.9 TDI	(2KA, 2KH)	09/05→		RUN72D	MAG74D	ETS74ND	ETS70D1N-ETS74DI	476420ES
CADDY III Box 1.9 TDI	(2KA, 2KH)	04/04→		RUN72D	MAG74D	ETS74ND	ETS70D1N-ETS74DI	476420ES
CADDY III Box 2.0 SDI	(2KA, 2KH)	03/04→		RUN72D	MAG74D	ETS74ND	ETS70D1N-ETS74DI	476420ES
CADDY III Box 2.0 TDI	(2KA, 2KH)	09/07→		RUN72D	MAG74D	ETS74ND	ETS70D1N-ETS74DI	476420ES
CORRADO 2.0 i	(53I)	04/93→12/95			MAG62DB	ETS60NDB-ETS50NDB		ES60NDB
CORRADO 2.0 i 16V	(53I)	08/91→12/95			MAG62DB	ETS60NDB-ETS50NDB		ES60NDB
CORRADO 2.9 VR6	(53I)	08/91→12/95			MAG62DB	ETS60NDB-ETS50NDB		ES60NDB
EOS 1.4 TSI	Stop/Start , RB , A	05/08→	AGM70D	RUN50D	MAG50D	ETS50ND	ETS50D3N-ETS50D4N	
EOS 1.4 TSI	(1F7)	05/08→		RUN50D	MAG50D	ETS50ND	ETS50D3N-ETS50D4N	
EOS 1.6 FSI	(1F7)	06/06→		RUN50D	MAG50D	ETS50ND	ETS50D3N-ETS50D4N	
EOS 2.0 FSI	(1F7)	03/06→		RUN62D	MAG62D	ETS62ND	ETS60D3N	438320ES
EOS 2.0 TFSI	(1F7)	03/06→		RUN62D	MAG62D	ETS62ND	ETS60D3N	438320ES
EOS 2.0 TSI	(1F7)	11/09→		RUN62D	MAG62D	ETS62ND	ETS60D3N	438320ES
EOS 3.2 V6	(1F7)	06/06→		RUN72D	MAG74D	ETS74ND	ETS70D1N-ETS74DI	476420ES
EOS 3.6 V6	(1F7)	05/09→		RUN72D	MAG74D	ETS74ND	ETS70D1N-ETS74DI	476420ES
EOS 2.0 TDI	(1F7)	06/06→05/08		RUN72D	MAG74D	ETS74ND	ETS70D1N-ETS74DI	476420ES
EOS 2.0 TDI 16V	(1F7)	05/08→		RUN72D	MAG74D	ETS74ND	ETS70D1N-ETS74DI	476420ES
FOX 1.0	(5Z1)	10/03→		RUN50D	MAG50D	ETS50ND	ETS50D3N-ETS50D4N	
FOX 1.0	(5Z1)	10/03→		RUN50D	MAG50D	ETS50ND	ETS50D3N-ETS50D4N	
FOX 1.0 Alcohol	(5Z1)	10/03→		RUN50D	MAG50D	ETS50ND	ETS50D3N-ETS50D4N	
FOX 1.0	(5Z1)	04/08→		RUN50D	MAG50D	ETS50ND	ETS50D3N-ETS50D4N	
FOX 1.0 Total Flex	(5Z1)	03/08→		RUN50D	MAG50D	ETS50ND	ETS50D3N-ETS50D4N	
FOX 1.2	(5Z1)	04/05→		RUN50D	MAG50D	ETS50ND	ETS50D3N-ETS50D4N	
FOX 1.4	(5Z1)	04/05→		RUN50D	MAG50D	ETS50ND	ETS50D3N-ETS50D4N	
FOX 1.6	(5Z1)	10/03→		RUN50D	MAG50D	ETS50ND	ETS50D3N-ETS50D4N	
FOX 1.6	(5Z1)	10/05→		RUN50D	MAG50D	ETS50ND	ETS50D3N-ETS50D4N	
FOX 1.6 Total Flex	(5Z1)	10/03→		RUN50D	MAG50D	ETS50ND	ETS50D3N-ETS50D4N	
FOX 1.6 Alcohol	(5Z1)	10/03→		RUN50D	MAG50D	ETS50ND	ETS50D3N-ETS50D4N	
FOX 1.4 TDI	(5Z1)	04/05→		RUN62D	MAG62D	ETS62ND	ETS60D3N	438320ES
FOX 1.9 D	(5Z1)	12/07→		RUN62D				
GOLF II 1.8 GTI G60	(19E, 1G1)	04/90→07/91			MAG44DB	ETS44NDB		ES45NDB
GOLF III 1.0	(1H1)	10/94→09/96			MAG44DB	ETS44NDB		ES45NDB
GOLF III 1.4	(1H1)	11/91→08/97		RUN50D	MAG50D-MAG45D	ETS50ND-ETS45ND	ETS50D3N-ETS50D4N	436210ES
GOLF III 1.4	(1H1)	10/91→08/97		RUN50D	MAG50D-MAG45D	ETS50ND-ETS45ND	ETS50D3N-ETS50D4N	436210ES
GOLF III 1.6	(1H1)	09/92→08/97		RUN62D	MAG62D	ETS62ND	ETS60D3N	438320ES
GOLF III 1.6	(1H1)	07/95→08/97		RUN62D	MAG62D	ETS62ND	ETS60D3N	438320ES

	Design		START	RUN	MAGIS	ETS	ETS alternative	ES
VOLKSWAGEN								
GOLF III 1.8	(1H1)	11/91→08/97		RUN62D	MAG62D	ETS62ND	ETS60D3N	438320ES
GOLF III 1.8	(1H1)	11/91→08/97		RUN62D	MAG62D	ETS62ND	ETS60D3N	438320ES
GOLF III 1.8 Syncro (1HX1)	(1H1)	01/93→08/97			MAG62DB	ETS60NDB	ETS60D4N	ES60NDB
GOLF III 2.0 GL	(1H1)	08/95→09/97		RUN62D	MAG62D	ETS62ND	ETS60D3N	438320ES
GOLF III 2.0	(1H1)	11/91→08/97		RUN62D	MAG62D	ETS62ND	ETS60D3N	438320ES
GOLF III 2.0 Syncro (1HX1)	(1H1)	08/95→08/97		RUN62D	MAG62D	ETS62ND	ETS60D3N	438320ES
GOLF III 2.0 GTI 16V	(1H1)	08/92→08/97		RUN62D	MAG62D	ETS62ND	ETS60D3N	438320ES
GOLF III 2.8 VR6	(1H1)	01/92→08/97		RUN72D	MAG74D	ETS74ND	ETS70D1N-ETS74DI	476420ES
GOLF III 2.9 VR6 Syncro (1HX1)	(1H1)	10/94→08/97			MAG62DB	ETS60NDB	ETS60D4N	ES60NDB
GOLF III 1.9 SDI	(1H1)	07/95→08/97		RUN72D				
GOLF III 1.9 D	(1H1)	11/91→08/97		RUN72D				
GOLF III 1.9 TD,GTD	(1H1)	11/91→08/97		RUN72D				
GOLF III 1.9 TDI	(1H1)	09/93→08/97		RUN72D				
GOLF III 1.9 TDI Syncro (1HX1)	(1H1)	08/95→08/97		RUN72D				
GOLF III 1.9 TDI	(1H1)	04/96→08/97		RUN72D				
GOLF III Citystromer	(1H1)	11/94→08/97			MAG72DB	ETS71NDB		
GOLF III Variant 1.4	(1H5)	07/93→04/99		RUN50D				
GOLF III Variant 1.4	(1H5)	07/93→04/99		RUN50D				
GOLF III Variant 1.6	(1H5)	07/93→12/97			MAG62DB	ETS60NDB-ETS50NDB		ES60NDB
GOLF III Variant 1.6	(1H5)	07/94→04/99			MAG62DB	ETS60NDB-ETS50NDB		ES60NDB
GOLF III Variant 1.8	(1H5)	07/93→04/99		RUN62D	MAG62D	ETS62ND	ETS60D3N	438320ES
GOLF III Variant 1.8	(1H5)	07/93→04/99		RUN62D	MAG62D	ETS62ND	ETS60D3N	438320ES
GOLF III Variant 1.8 Syncro	(1H5)	10/94→04/99			MAG62DB	ETS60NDB	ETS60D4N	ES60NDB
GOLF III Variant 2.0	(1H5)	08/95→04/96		RUN62D	MAG62D	ETS62ND	ETS60D3N	438320ES
GOLF III Variant 2.0	(1H5)	07/93→04/99			MAG62DB	ETS60NDB	ETS60D4N	ES60NDB
GOLF III Variant 2.0 Syncro	(1H5)	08/95→04/99		RUN62D	MAG62D	ETS62ND	ETS60D3N	438320ES
GOLF III Variant 2.9 VR6	(1H5)	10/94→04/99			MAG62DB	ETS60NDB	ETS60D4N	ES60NDB
GOLF III Variant 2.9 VR6 Syncro	(1H5)	10/94→04/99			MAG62DB	ETS60NDB	ETS60D4N	ES60NDB
GOLF III Variant 1.9 SDI	(1H5)	07/95→04/99		RUN72D				
GOLF III Variant 1.9 D	(1H5)	07/93→04/99		RUN72D				
GOLF III Variant 1.9 TD	(1H5)	07/93→04/99		RUN72D				
GOLF III Variant 1.9 TDI	(1H5)	03/94→04/99		RUN72D				
GOLF III Variant 1.9 TDI Syncro	(1H5)	07/95→04/99		RUN72D				
GOLF III Variant 1.9 TDI	(1H5)	04/96→04/99		RUN72D				
GOLF III Cabriolet 1.6	(1E7)	10/94→05/98			MAG62DB	ETS60NDB	ETS60D4N	ES60NDB
GOLF III Cabriolet 1.8	(1E7)	07/93→05/98			MAG62DB	ETS60NDB	ETS60D4N	ES60NDB
GOLF III Cabriolet 1.8	(1E7)	07/93→05/98			MAG62DB	ETS60NDB	ETS60D4N	ES60NDB
GOLF III Cabriolet 2.0	(1E7)	07/93→05/98			MAG62DB	ETS60NDB	ETS60D4N	ES60NDB
GOLF III Cabriolet 1.9 TDI	(1E7)	08/95→05/98		RUN72D				
GOLF III Cabriolet 1.9 TDI	(1E7)	07/96→05/98		RUN72D				
GOLF IV 1.0	(1J1)	08/98→05/02		RUN50D				
GOLF IV 1.0	(1J1)	08/97→05/02		RUN50D				
GOLF IV 1.0 Turbo	(1J1)	08/97→05/02		RUN50D				
GOLF IV 1.4 16V	(1J1)	08/97→06/05		RUN50D	MAG50D-MAG45D	ETS50ND-ETS45ND	ETS50D3N-ETS50D4N	436210ES
GOLF IV 1.6	(1J1)	12/98→05/02		RUN50D				
GOLF IV 1.6	(1J1)	08/97→02/00		RUN62D	MAG62D	ETS62ND	ETS60D3N	438320ES
GOLF IV 1.6	(1J1)	08/00→06/05		RUN62D	MAG62D	ETS62ND	ETS60D3N	438320ES

	Design		START	RUN	MAGIS	ETS	ETS alternative	ES
VOLKSWAGEN								
GOLF IV 1.6	(1J1)	08/03→06/05		RUN50D				
GOLF IV 1.6	(1J1)	02/01→06/01		RUN50D				
GOLF IV 1.6 16V	(1J1)	02/00→06/05		RUN62D	MAG62D	ETS62ND	ETS60D3N	438320ES
GOLF IV 1.6 FSI	(1J1)	01/02→06/05		RUN62D	MAG62D	ETS62ND	ETS60D3N	438320ES
GOLF IV 1.8	(1J1)	10/97→09/99		RUN62D				
GOLF IV 1.8	(1J1)	04/98→05/02		RUN62D				
GOLF IV 1.8	(1J1)	08/97→06/05		RUN62D	MAG62D	ETS62ND	ETS60D3N	438320ES
GOLF IV 1.8 4motion	(1J1)	05/98→06/05		RUN62D	MAG62D	ETS62ND	ETS60D3N	438320ES
GOLF IV 1.8 T	(1J1)	08/97→06/05		RUN62D	MAG62D	ETS62ND	ETS60D3N	438320ES
GOLF IV 1.8 T GTI	(1J1)	08/01→06/05		RUN62D	MAG62D	ETS62ND	ETS60D3N	438320ES
GOLF IV 2.0	(1J1)	07/98→06/05		RUN62D	MAG62D	ETS62ND	ETS60D3N	438320ES
GOLF IV 2.0 4motion	(1J1)	10/00→06/05		RUN62D	MAG62D	ETS62ND	ETS60D3N	438320ES
GOLF IV 2.3 V5	(1J1)	08/97→10/00		RUN62D	MAG62D	ETS62ND	ETS60D3N	438320ES
GOLF IV 2.3 V5 4motion	(1J1)	12/98→10/00		RUN62D	MAG62D	ETS62ND	ETS60D3N	438320ES
GOLF IV 2.3 V5	(1J1)	10/00→06/05		RUN62D	MAG62D	ETS62ND	ETS60D3N	438320ES
GOLF IV 2.3 V5 4motion	(1J1)	10/00→06/05		RUN62D	MAG62D	ETS62ND	ETS60D3N	438320ES
GOLF IV 2.8 V6 4motion	(1J1)	03/99→06/05		RUN72D				
GOLF IV 3.2 R32 4motion	(1J1)	09/02→06/05		RUN72D				
GOLF IV 1.9 SDI	(1J1)	08/97→06/05		RUN72D	MAG74D	ETS74ND	ETS70D1N-ETS74DI	476420ES
GOLF IV 1.9 TD	(1J1)	10/97→09/99		RUN72D				
GOLF IV 1.9 TDI	(1J1)	10/97→05/04		RUN72D	MAG74D	ETS74ND	ETS70D1N-ETS74DI	476420ES
GOLF IV 1.9 TDI 4motion	(1J1)	07/98→04/02		RUN72D	MAG74D	ETS74ND	ETS70D1N-ETS74DI	476420ES
GOLF IV 1.9 TDI	(1J1)	09/00→06/05		RUN72D	MAG74D	ETS74ND	ETS70D1N-ETS74DI	476420ES
GOLF IV 1.9 TDI 4motion	(1J1)	09/00→06/05		RUN72D	MAG74D	ETS74ND	ETS70D1N-ETS74DI	476420ES
GOLF IV 1.9 TDI	(1J1)	08/97→05/04		RUN72D	MAG74D	ETS74ND	ETS70D1N-ETS74DI	476420ES
GOLF IV 1.9 TDI	(1J1)	12/98→06/01		RUN72D	MAG74D	ETS74ND	ETS70D1N-ETS74DI	476420ES
GOLF IV 1.9 TDI 4motion	(1J1)	09/99→06/01		RUN72D	MAG74D	ETS74ND	ETS70D1N-ETS74DI	476420ES
GOLF IV 1.9 TDI	(1J1)	11/00→06/05		RUN72D	MAG74D	ETS74ND	ETS70D1N-ETS74DI	476420ES
GOLF IV 1.9 TDI 4motion	(1J1)	11/00→06/05		RUN72D	MAG74D	ETS74ND	ETS70D1N-ETS74DI	476420ES
GOLF IV 2.8	(1J1)	08/97→09/99		RUN72D				
GOLF IV 1.9 TDI	(1J1)	05/00→06/05		RUN72D	MAG74D	ETS74ND	ETS70D1N-ETS74DI	476420ES
GOLF IV 2.8 VR6	(1J1)	10/00→07/02		RUN72D				
GOLF IV 1.9 TDI 4motion	(1J1)	02/00→06/05		RUN72D	MAG74D	ETS74ND	ETS70D1N-ETS74DI	476420ES
GOLF IV 2.8 VR6	(1J1)	03/02→10/05		RUN72D				
GOLF IV Variant 1.4 16V	(1J5)	05/99→06/06		RUN50D	MAG50D-MAG45D	ETS50ND-ETS45ND	ETS50D3N-ETS50D4N	436210ES
GOLF IV Variant 1.6	(1J5)	05/99→02/00		RUN62D	MAG62D	ETS62ND	ETS60D3N	438320ES
GOLF IV Variant 1.6	(1J5)	08/00→06/06		RUN62D	MAG62D	ETS62ND	ETS60D3N	438320ES
GOLF IV Variant 1.6 16V	(1J5)	02/00→06/06		RUN62D	MAG62D	ETS62ND	ETS60D3N	438320ES
GOLF IV Variant 1.6 FSI	(1J5)	01/02→06/06		RUN62D	MAG62D	ETS62ND	ETS60D3N	438320ES
GOLF IV Variant 1.6 FSi	(1J5)	10/03→07/04		RUN50D				
GOLF IV Variant 1.8 4motion	(1J5)	05/99→06/06		RUN62D	MAG62D	ETS62ND	ETS60D3N	438320ES
GOLF IV Variant 1.8 T	(1J5)	05/00→06/06		RUN62D	MAG62D	ETS62ND	ETS60D3N	438320ES
GOLF IV Variant 2.0	(1J5)	05/99→06/06		RUN62D	MAG62D	ETS62ND	ETS60D3N	438320ES
GOLF IV Variant 2.0 4motion	(1J5)	10/00→06/06		RUN62D	MAG62D	ETS62ND	ETS60D3N	438320ES
GOLF IV Variant 2.0 Bi-Fuel	(1J5)	02/02→06/06		RUN62D	MAG62D	ETS62ND	ETS60D3N	438320ES
GOLF IV Variant 2.3 V5	(1J5)	05/99→06/06		RUN62D	MAG62D	ETS62ND	ETS60D3N	438320ES
GOLF IV Variant 2.3 V5 4motion	(1J5)	05/99→06/06		RUN62D	MAG62D	ETS62ND	ETS60D3N	438320ES

	Design		START	RUN	MAGIS	ETS	ETS alternative	ES
VOLKSWAGEN								
GOLF IV Variant 2.3 V5	(1J5)	10/00→06/06		RUN62D	MAG62D	ETS62ND	ETS60D3N	438320ES
GOLF IV Variant 2.3 V5 4motion	(1J5)	10/00→06/06		RUN62D	MAG62D	ETS62ND	ETS60D3N	438320ES
GOLF IV Variant 2.8 V6 4motion	(1J5)	05/99→06/06		RUN72D				
GOLF IV Variant 1.9 SDI	(1J5)	05/99→06/06		RUN72D	MAG74D	ETS74ND	ETS70D1N-ETS74DI	476420ES
GOLF IV Variant 1.9 TDI	(1J5)	05/99→05/06		RUN72D	MAG74D	ETS74ND	ETS70D1N-ETS74DI	476420ES
GOLF IV Variant 1.9 TDI 4motion	(1J5)	05/99→04/02		RUN72D	MAG74D	ETS74ND	ETS70D1N-ETS74DI	476420ES
GOLF IV Variant 1.9 TDI	(1J5)	09/00→06/06		RUN72D	MAG74D	ETS74ND	ETS70D1N-ETS74DI	476420ES
GOLF IV Variant 1.9 TDI 4motion	(1J5)	09/00→06/06		RUN72D	MAG74D	ETS74ND	ETS70D1N-ETS74DI	476420ES
GOLF IV Variant 1.9 TDI	(1J5)	05/99→06/01		RUN72D	MAG74D	ETS74ND	ETS70D1N-ETS74DI	476420ES
GOLF IV Variant 1.9 TDI	(1J5)	08/99→06/01		RUN72D	MAG74D	ETS74ND	ETS70D1N-ETS74DI	476420ES
GOLF IV Variant 1.9 TDI 4motion	(1J5)	05/99→06/01		RUN72D	MAG74D	ETS74ND	ETS70D1N-ETS74DI	476420ES
GOLF IV Variant 1.9 TDI	(1J5)	11/00→06/06		RUN72D	MAG74D	ETS74ND	ETS70D1N-ETS74DI	476420ES
GOLF IV Variant 1.9 TDI 4motion	(1J5)	11/00→06/06		RUN72D	MAG74D	ETS74ND	ETS70D1N-ETS74DI	476420ES
GOLF IV Cabriolet 1.6	(1E7)	06/98→06/02		RUN62D	MAG62D	ETS62ND	ETS60D3N	438320ES
GOLF IV Cabriolet 1.8	(1E7)	06/98→06/02		RUN62D	MAG62D	ETS62ND	ETS60D3N	438320ES
GOLF IV Cabriolet 1.8	(1E7)	06/98→06/02		RUN62D	MAG62D	ETS62ND	ETS60D3N	438320ES
GOLF IV Cabriolet 2.0	(1E7)	06/98→06/02		RUN62D	MAG62D	ETS62ND	ETS60D3N	438320ES
GOLF IV Cabriolet 1.9 TDI	(1E7)	06/98→06/02		RUN72D	MAG74D	ETS74ND	ETS70D1N-ETS74DI	476420ES
GOLF IV Cabriolet 1.9 TDI	(1E7)	06/98→06/02		RUN72D	MAG74D	ETS74ND	ETS70D1N-ETS74DI	476420ES
GOLF V 1.4 16V	(1K1)	10/03→		RUN50D				
GOLF V 1.4 16V	(1K1)	05/06→		RUN50D				
GOLF V 1.4 FSI	(1K1)	10/03→		RUN50D				
GOLF V 1.4 TSI	(1K1)	05/07→		RUN50D	MAG50D-MAG45D	ETS50ND-ETS45ND	ETS50D3N-ETS50D4N	436210ES
GOLF V 1.4 TSI	(1K1)	05/06→		RUN50D				
GOLF V 1.4 TSI	(1K1)	11/05→		RUN50D				
GOLF V 1.6	(1K1)	08/05→		RUN50D	MAG50D-MAG45D	ETS50ND-ETS45ND	ETS50D3N-ETS50D4N	436210ES
GOLF V 1.6	(1K1)	01/04→		RUN62D				
GOLF V 1.6 MultiFuel	(1K1)	10/07→		RUN62D				
GOLF V 1.6 FSi	(1K1)	02/06→		RUN50D				
GOLF V 1.6 FSI	(1K1)	10/03→		RUN62D				
GOLF V 1.8 GTi	(1K1)	08/06→		RUN62D	MAG62D	ETS62ND	ETS60D3N	438320ES
GOLF V 2.0	(1K1)	08/06→		RUN62D	MAG62D	ETS62ND	ETS60D3N	438320ES
GOLF V 2.0 FSI	(1K1)	01/04→		RUN72D	MAG74D	ETS74ND	ETS70D1N-ETS74DI	476420ES
GOLF V 2.0 FSI 4motion	(1K1)	08/04→		RUN72D	MAG74D	ETS74ND	ETS70D1N-ETS74DI	476420ES
GOLF V 2.0 GTI	(1K1)	10/04→		RUN72D	MAG74D	ETS74ND	ETS70D1N-ETS74DI	476420ES
GOLF V 2.0 GTI	(1K1)	09/06→		RUN62D	MAG62D	ETS62ND	ETS60D3N	438320ES
GOLF V 3.2 R32 4motion	(1K1)	01/04→		RUN72D				
GOLF V 3.2	(1K1)	09/05→		RUN72D				
GOLF V 3.2 R32 4motion	(1K1)	11/05→	AGM80D	RUN72D				
GOLF V 1.9 TDI	(1K1)	05/04→		RUN72D				
GOLF V 1.9 TDI	(1K1)	10/03→		RUN72D				
GOLF V 1.9 TDI 4motion	(1K1)	08/04→		RUN72D				
GOLF V 1.9 SDi	(1K1)	12/05→		RUN72D	MAG74D	ETS74ND	ETS70D1N-ETS74DI	476420ES
GOLF V 2.0 SDI	(1K1)	01/04→		RUN72D				
GOLF V 2.0 TDI	(1K1)	10/03→		RUN72D	MAG74D	ETS74ND	ETS70D1N-ETS74DI	476420ES
GOLF V 2.0 TDI	(1K1)	12/04→		RUN72D	MAG74D	ETS74ND	ETS70D1N-ETS74DI	476420ES
GOLF V 2.0 TDI 4motion	(1K1)	08/04→		RUN72D	MAG74D	ETS74ND	ETS70D1N-ETS74DI	476420ES

	Design		START	RUN	MAGIS	ETS	ETS alternative	ES
VOLKSWAGEN								
GOLF V 2.0 TDI 16V	(1K1)	10/03→		RUN72D				
GOLF V 2.0 TDI 16V 4motion	(1K1)	08/04→		RUN72D				
GOLF V 2.0 TDI	(1K1)	11/05→		RUN72D				
GOLF V Variant 1.4	(1K5)	06/07→		RUN50D				
GOLF V Variant 1.4 TSI	(1K5)	06/07→		RUN50D				
GOLF V Variant 1.4 TSI	(1K5)	06/07→		RUN50D				
GOLF V Variant 1.4 TSI	(1K5)	07/08→		RUN50D				
GOLF V Variant 1.4 TSI	(1K5)	06/07→		RUN50D				
GOLF V Variant 1.6	(1K5)	06/07→		RUN50D				
GOLF V Variant 1.6 MultiFuel	(1K5)	11/07→		RUN62D				
GOLF V Variant 2.0	(1K5)	06/07→		RUN62D	MAG62D	ETS62ND	ETS60D3N	438320ES
GOLF V Variant 1.9 TDI	(1K5)	06/07→		RUN72D				
GOLF V Variant 1.9 TDI 4motion	(1K5)	01/08→		RUN72D				
GOLF V Variant 2.0 TDI	(1K5)	06/07→		RUN72D	MAG74D	ETS74ND	ETS70D1N-ETS74DI	476420ES
GOLF V Variant 2.0 TDI 4motion	(1K5)	06/07→		RUN72D	MAG74D	ETS74ND	ETS70D1N-ETS74DI	476420ES
GOLF V Variant 2.0 TDI	(1K5)	06/07→		RUN72D	MAG74D	ETS74ND	ETS70D1N-ETS74DI	476420ES
GOLF V Variant 2.0 TDI 16V	(1K5)	06/07→		RUN72D	MAG74D	ETS74ND	ETS70D1N-ETS74DI	476420ES
GOLF VI 1.4	(5K1)	10/08→		RUN50D				
GOLF VI 1.6	(5K1)	10/08→		RUN50D				
GOLF VI 1.6	Stop/Start , RB , A	02/09→	AGM70D					
GOLF VI 1.4 TSI	(5K1)	10/08→		RUN50D				
GOLF VI 1.4 TSI	(5K1)	10/08→		RUN50D				
GOLF VI 1.6 BiFuel	(5K1)	03/09→		RUN50D				
GOLF VI 2.0 TSI	(5K1)	07/09→		RUN62D				
GOLF VI 2.0 TSI	(5K1)	04/09→		RUN62D	MAG62D	ETS62ND	ETS60D3N	438320ES
GOLF VI 2.0 R 4motion	(5K1)	11/09→		RUN72D				
GOLF VI 2.5 FSI	(5K1)	08/09→		RUN62D				
GOLF VI 2.0 TDI	(5K1)	10/08→		RUN72D				
GOLF VI 2.0 TDI	(5K1)	10/08→		RUN72D				
GOLF VI 2.0 TDI	(5K1)	10/08→		RUN72D				
GOLF VI 2.0 TDI 4motion	(5K1)	05/09→		RUN72D				
GOLF VI 2.0 TDI	(5K1)	04/09→		RUN72D				
GOLF VI Variant 1.4	(AJ5)	07/09→		RUN50D				
GOLF VI Variant 1.4 TSI	(AJ5)	07/09→		RUN50D				
GOLF VI Variant 1.4 TSI	(AJ5)	07/09→		RUN50D				
GOLF VI Variant 1.6	(AJ5)	07/09→		RUN50D				
GOLF VI Variant 1.6 TDI 4motion	(AJ5)	07/09→		RUN62D				
GOLF VI Variant 2.0 TDI	(AJ5)	07/09→		RUN72D				
GOLF PLUS 1.2 TSI	(5M1, 521)	11/09→		RUN50D				
GOLF PLUS 1.4 16V	(5M1, 521)	01/05→		RUN50D				
GOLF PLUS 1.4 16V	(5M1, 521)	01/05→		RUN50D				
GOLF PLUS 1.4 FSI	(5M1, 521)	07/05→05/06		RUN50D				
GOLF PLUS 1.4 TSI	(5M1, 521)	06/07→		RUN50D				
GOLF PLUS 1.4 TSI	(5M1, 521)	05/06→		RUN50D				
GOLF PLUS 1.4 TSI	(5M1, 521)	06/08→		RUN50D				
GOLF PLUS 1.4 TSI	(5M1, 521)	05/06→		RUN50D				
GOLF PLUS 1.6	(5M1, 521)	08/05→		RUN50D				

	Design		START	RUN	MAGIS	ETS	ETS alternative	ES
VOLKSWAGEN								
GOLF PLUS 1.6	(5M1, 521)	05/05→		RUN50D				
GOLF PLUS 1.6 MultiFuel	(5M1, 521)	11/07→		RUN50D				
GOLF PLUS 1.6 FSI	(5M1, 521)	01/05→		RUN50D				
GOLF PLUS 2.0 FSI	(5M1, 521)	05/05→		RUN72D	MAG74D	ETS74ND	ETS70D1N-ETS74DI	476420ES
GOLF PLUS 1.6 TDI	(5M1, 521)	03/09→		RUN62D				
GOLF PLUS 1.9 SDI	(5M1, 521)	12/05→		RUN72D				
GOLF PLUS 1.9 TDI	(5M1, 521)	05/05→		RUN72D				
GOLF PLUS 1.9 TDI	(5M1, 521)	01/05→		RUN72D				
GOLF PLUS 2.0 TDI	(5M1, 521)	03/09→		RUN72D				
GOLF PLUS 2.0 TDI	(5M1, 521)	11/05→		RUN72D				
GOLF PLUS 2.0 TDI	(5M1, 521)	05/05→		RUN72D				
GOLF PLUS 2.0 TDI	(5M1, 521)	12/05→		RUN72D				
GOLF PLUS 2.0 TDI 16V	(5M1, 521)	01/05→		RUN72D				
JETTA II 1.6 TD	(19E, 1G2)	01/90→10/91			MAG62DB	ETS60NDB-ETS50NDB		ES60NDB
JETTA III 1.4 TSI	(1K2)	05/07→		RUN50D				
JETTA III 1.4 TSI	(1K2)	07/06→		RUN50D				
JETTA III 1.4 TSI	(1K2)	07/08→		RUN50D				
JETTA III 1.4 TSI	(1K2)	07/06→		RUN50D				
JETTA III 1.6	(1K2)	10/05→		RUN62D	MAG62D	ETS62ND	ETS60D3N	438320ES
JETTA III 1.6 MultiFuel	(1K2)	01/08→		RUN62D				
JETTA III 1.6 FSI	(1K2)	09/05→		RUN62D	MAG62D	ETS62ND	ETS60D3N	438320ES
JETTA III 2.0 FSI	(1K2)	08/05→		RUN62D	MAG62D	ETS62ND	ETS60D3N	438320ES
JETTA III 2.0	(1K2)	08/05→06/08		RUN62D				
JETTA III 2.0 TFSI	(1K2)	10/05→		RUN62D	MAG62D	ETS62ND	ETS60D3N	438320ES
JETTA III 2.5 FSI	(1K2)	01/06→		RUN62D	MAG62D	ETS62ND	ETS60D3N	438320ES
JETTA III 2.5 FSI	(1K2)	07/08→		RUN62D				
JETTA III 1.6 TDI	(1K2)	06/09→		RUN62D				
JETTA III 1.9 TDI	(1K2)	08/05→		RUN72D				
JETTA III 2.0 TDI	(1K2)	09/05→		RUN72D				
JETTA III 2.0 TDI	(1K2)	10/05→		RUN72D				
JETTA III 2.0 TDI 16V	(1K2)	08/05→		RUN72D				
JETTA III 2.0 TDI	(1K2)	10/06→		RUN72D				
KAEFER 1600 i (Mexico)		10/92→07/03			MAG44DB	ETS44NDB		ES45NDB
LUPO 1.0	(6X1, 6E1)	09/98→07/05		RUN50D	MAG50D-MAG45D	ETS50ND-ETS45ND	ETS50D3N-ETS50D4N	436210ES
LUPO 1.4	(6X1, 6E1)	10/00→07/05		RUN50D	MAG50D-MAG45D	ETS50ND-ETS45ND	ETS50D3N-ETS50D4N	436210ES
LUPO 1.4 16V	(6X1, 6E1)	09/98→07/05		RUN50D				
LUPO 1.4 16V	(6X1, 6E1)	08/99→07/05		RUN50D	MAG50D-MAG45D	ETS50ND-ETS45ND	ETS50D3N-ETS50D4N	436210ES
LUPO 1.4 FSI	(6X1, 6E1)	02/01→07/05		RUN50D				
LUPO 1.6	(6X1, 6E1)	10/03→		RUN62D	MAG62D	ETS62ND	ETS60D3N	438320ES
LUPO 1.6 Alcohol	(6X1, 6E1)	10/03→		RUN62D	MAG62D	ETS62ND	ETS60D3N	438320ES
LUPO 1.6 GTI	(6X1, 6E1)	09/00→07/05		RUN62D	MAG62D	ETS62ND	ETS60D3N	438320ES
LUPO 1.2 TDI 3L	(6X1, 6E1)	07/99→07/05		RUN62D	MAG62D	ETS62ND	ETS60D3N	438320ES
LUPO 1.4 TDI	(6X1, 6E1)	01/99→07/05		RUN62D	MAG62D	ETS62ND	ETS60D3N	438320ES
LUPO 1.7 SDI	(6X1, 6E1)	09/98→07/05		RUN62D	MAG62D	ETS62ND	ETS60D3N	438320ES
NEW BEETLE 1.4	(9C1, 1C1)	11/01→		RUN62D	MAG62D	ETS62ND	ETS60D3N	438320ES
NEW BEETLE 1.6	(9C1, 1C1)	10/99→09/00		RUN62D	MAG62D	ETS62ND	ETS60D3N	438320ES
NEW BEETLE 1.6	(9C1, 1C1)	06/00→		RUN62D	MAG62D	ETS62ND	ETS60D3N	438320ES

	Design		START	RUN	MAGIS	ETS	ETS alternative	ES
VOLKSWAGEN								
NEW BEETLE 1.8 T	(9C1, 1C1)	10/99→		RUN62D	MAG62D	ETS62ND	ETS60D3N	438320ES
NEW BEETLE 1.8 T	(9C1, 1C1)	11/01→06/05		RUN62D	MAG62D	ETS62ND	ETS60D3N	438320ES
NEW BEETLE 2.0	(9C1, 1C1)	01/98→		RUN62D	MAG62D	ETS62ND	ETS60D3N	438320ES
NEW BEETLE 2.3 V5	(9C1, 1C1)	10/00→		RUN62D	MAG62D	ETS62ND	ETS60D3N	438320ES
NEW BEETLE 2.5	(9C1, 1C1)	07/05→		RUN72D				
NEW BEETLE RSI 3.2 (1C9)	(9C1, 1C1)	04/00→05/01		RUN72D	MAG74D	ETS74ND	ETS70D1N-ETS74DI	476420ES
NEW BEETLE 1.9 TDI	(9C1, 1C1)	01/98→06/04		RUN72D	MAG74D	ETS74ND	ETS70D1N-ETS74DI	476420ES
NEW BEETLE 1.9 TDI	(9C1, 1C1)	02/01→		RUN72D	MAG74D	ETS74ND	ETS70D1N-ETS74DI	476420ES
NEW BEETLE 1.9 TDI	(9C1, 1C1)	07/05→		RUN72D				
NEW BEETLE Convertible 1.4	(1Y7)	01/03→		RUN62D	MAG62D	ETS62ND	ETS60D3N	438320ES
NEW BEETLE Convertible 1.6	(1Y7)	01/03→		RUN62D	MAG62D	ETS62ND	ETS60D3N	438320ES
NEW BEETLE Convertible 1.8 T	(1Y7)	01/03→		RUN62D	MAG62D	ETS62ND	ETS60D3N	438320ES
NEW BEETLE Convertible 2.0	(1Y7)	09/02→		RUN62D	MAG62D	ETS62ND	ETS60D3N	438320ES
NEW BEETLE Convertible 2.5	(1Y7)	07/05→		RUN72D				
NEW BEETLE Convertible 1.9 TDI	(1Y7)	06/03→		RUN72D	MAG74D	ETS74ND	ETS70D1N-ETS74DI	476420ES
NEW BEETLE Convertible 1.9 TDI	(1Y7)	07/05→		RUN72D	MAG74D	ETS74ND	ETS70D1N-ETS74DI	476420ES
PASSAT 1.6	(3A2, 35I)	10/94→08/96		RUN62D	MAG62D	ETS62ND	ETS60D3N	438320ES
PASSAT 1.8	(3A2, 35I)	08/90→08/96			MAG62DB	ETS60NDB-ETS50NDB		ES60NDB
PASSAT 2.0	(3A2, 35I)	03/95→08/96		RUN62D	MAG62D	ETS62ND	ETS60D3N	438320ES
PASSAT 2.0	(3A2, 35I)	02/90→08/96		RUN62D	MAG62D	ETS62ND	ETS60D3N	438320ES
PASSAT 2.0 Syncro	(3A2, 35I)	10/90→08/96		RUN62D	MAG62D	ETS62ND	ETS60D3N	438320ES
PASSAT 2.0 16V	(3A2, 35I)	01/94→08/96		RUN62D	MAG62D	ETS62ND	ETS60D3N	438320ES
PASSAT 2.8 VR6	(3A2, 35I)	06/91→08/96		RUN72D	MAG74D	ETS74ND	ETS70D1N-ETS74DI	476420ES
PASSAT 1.9 TD	(3A2, 35I)	03/91→08/96		RUN72D	MAG74D	ETS74ND	ETS70D1N-ETS74DI	476420ES
PASSAT 1.9 TDI	(3A2, 35I)	10/93→08/96		RUN72D	MAG74D	ETS74ND	ETS70D1N-ETS74DI	476420ES
PASSAT 1.9 TDI	(3A2, 35I)	03/96→08/96		RUN72D	MAG74D	ETS74ND	ETS70D1N-ETS74DI	476420ES
PASSAT Variant 1.6	(3A5, 35I)	07/94→12/95		RUN62D	MAG62D	ETS62ND	ETS60D3N	438320ES
PASSAT Variant 1.8	(3A5, 35I)	08/90→05/97		RUN50D	MAG50D	ETS50ND	ETS50D3N-ETS50D4N	
PASSAT Variant 2.0	(3A5, 35I)	03/95→08/96		RUN62D	MAG62D	ETS62ND	ETS60D3N	438320ES
PASSAT Variant 2.0	(3A5, 35I)	02/90→05/97		RUN62D	MAG62D	ETS62ND	ETS60D3N	438320ES
PASSAT Variant 2.0	(3A5, 35I)	10/93→10/96		RUN62D	MAG62D	ETS62ND	ETS60D3N	438320ES
PASSAT Variant 2.0 Syncro	(3A5, 35I)	10/90→05/97		RUN62D	MAG62D	ETS62ND	ETS60D3N	438320ES
PASSAT Variant 2.0 16V	(3A5, 35I)	01/94→05/97		RUN62D	MAG62D	ETS62ND	ETS60D3N	438320ES
PASSAT Variant 2.8 VR6	(3A5, 35I)	06/91→05/97		RUN72D	MAG74D	ETS74ND	ETS70D1N-ETS74DI	476420ES
PASSAT Variant 2.9 VR6 Syncro	(3A5, 35I)	01/94→05/97		RUN72D	MAG74D	ETS74ND	ETS70D1N-ETS74DI	476420ES
PASSAT Variant 1.9 TD	(3A5, 35I)	03/91→05/97		RUN72D	MAG74D	ETS74ND	ETS70D1N-ETS74DI	476420ES
PASSAT Variant 1.9 TDI	(3A5, 35I)	10/93→05/97			MAG72DB	ETS71NDB		
PASSAT Variant 1.9 TDI	(3A5, 35I)	03/96→05/97		RUN72D	MAG74D	ETS74ND	ETS70D1N-ETS74DI	476420ES
PASSAT 1.6	(3B2)	10/96→11/00		RUN62D	MAG62D	ETS62ND	ETS60D3N	438320ES
PASSAT 1.8	(3B2)	01/97→11/00		RUN62D	MAG62D	ETS62ND	ETS60D3N	438320ES
PASSAT 1.8	(3B2)	10/96→11/00		RUN62D	MAG62D	ETS62ND	ETS60D3N	438320ES
PASSAT 1.8 Syncro/4motion	(3B2)	10/96→11/00		RUN62D	MAG62D	ETS62ND	ETS60D3N	438320ES
PASSAT 1.8 T	(3B2)	10/96→11/00		RUN62D	MAG62D	ETS62ND	ETS60D3N	438320ES
PASSAT 2.0	(3B2)	04/00→11/00		RUN62D	MAG62D	ETS62ND	ETS60D3N	438320ES
PASSAT 2.0 4motion	(3B2)	04/00→11/00		RUN62D	MAG62D	ETS62ND	ETS60D3N	438320ES
PASSAT 2.3 VR5	(3B2)	10/96→11/00		RUN72D	MAG74D	ETS74ND	ETS70D1N-ETS74DI	476420ES
PASSAT 2.3 VR5 Syncro/4motion	(3B2)	10/97→11/00		RUN72D	MAG74D	ETS74ND	ETS70D1N-ETS74DI	476420ES

	Design		START	RUN	MAGIS	ETS	ETS alternative	ES
VOLKSWAGEN								
PASSAT 2.8 V6	(3B2)	05/97→09/99		RUN72D	MAG74D	ETS74ND	ETS70D1N-ETS74DI	476420ES
PASSAT 2.8 V6	(3B2)	09/99→11/00		RUN72D	MAG74D	ETS74ND	ETS70D1N-ETS74DI	476420ES
PASSAT 2.8 Syncro	(3B2)	05/97→09/99		RUN72D	MAG74D	ETS74ND	ETS70D1N-ETS74DI	476420ES
PASSAT 2.8 V6 4motion	(3B2)	09/99→11/00		RUN72D	MAG74D	ETS74ND	ETS70D1N-ETS74DI	476420ES
PASSAT 2.8 V6	(3B2)	08/96→11/00		RUN72D	MAG74D	ETS74ND	ETS70D1N-ETS74DI	476420ES
PASSAT 2.8 V6 Syncro/4motion	(3B2)	10/96→11/00		RUN72D	MAG74D	ETS74ND	ETS70D1N-ETS74DI	476420ES
PASSAT 2.8 Syncro	(3B2)	05/97→08/00		RUN72D	MAG74D	ETS74ND	ETS70D1N-ETS74DI	476420ES
PASSAT 1.9 TDI	(3B2)	10/96→11/00		RUN72D	MAG74D	ETS74ND	ETS70D1N-ETS74DI	476420ES
PASSAT 1.9 TDI	(3B2)	02/00→11/00		RUN72D	MAG74D	ETS74ND	ETS70D1N-ETS74DI	476420ES
PASSAT 1.9 TDI	(3B2)	10/96→11/00		RUN72D	MAG74D	ETS74ND	ETS70D1N-ETS74DI	476420ES
PASSAT 1.9 TDI Syncro/4motion	(3B2)	10/96→11/00		RUN72D	MAG74D	ETS74ND	ETS70D1N-ETS74DI	476420ES
PASSAT 1.9 TDI	(3B2)	08/98→11/00		RUN72D	MAG74D	ETS74ND	ETS70D1N-ETS74DI	476420ES
PASSAT 1.9 TDI 4motion	(3B2)	08/99→11/00		RUN72D	MAG74D	ETS74ND	ETS70D1N-ETS74DI	476420ES
PASSAT 2.5 TDI	(3B2)	07/98→11/00		RUN72D	MAG74D	ETS74ND	ETS70D1N-ETS74DI	476420ES
PASSAT 2.5 TDI Syncro/4motion	(3B2)	12/98→11/00		RUN72D	MAG74D	ETS74ND	ETS70D1N-ETS74DI	476420ES
PASSAT Variant 1.6	(3B5)	06/97→11/00		RUN62D	MAG62D	ETS62ND	ETS60D3N	438320ES
PASSAT Variant 1.8	(3B5)	06/97→11/00		RUN62D	MAG62D	ETS62ND	ETS60D3N	438320ES
PASSAT Variant 1.8	(3B5)	06/97→11/00		RUN62D	MAG62D	ETS62ND	ETS60D3N	438320ES
PASSAT Variant 1.8 Syncro/4motion	(3B5)	06/97→11/00		RUN62D	MAG62D	ETS62ND	ETS60D3N	438320ES
PASSAT Variant 1.8 T	(3B5)	06/97→11/00		RUN62D	MAG62D	ETS62ND	ETS60D3N	438320ES
PASSAT Variant 2.0	(3B5)	04/00→11/00		RUN62D	MAG62D	ETS62ND	ETS60D3N	438320ES
PASSAT Variant 2.0 4motion	(3B5)	04/00→11/00		RUN62D	MAG62D	ETS62ND	ETS60D3N	438320ES
PASSAT Variant 2.3 VR5	(3B5)	06/97→11/00		RUN72D	MAG74D	ETS74ND	ETS70D1N-ETS74DI	476420ES
PASSAT Variant 2.3 VR5 Syncro/4motion	(3B5)	10/97→11/00		RUN72D	MAG74D	ETS74ND	ETS70D1N-ETS74DI	476420ES
PASSAT Variant 2.8 V6	(3B5)	09/97→09/99		RUN72D	MAG74D	ETS74ND	ETS70D1N-ETS74DI	476420ES
PASSAT Variant 2.8 V6	(3B5)	09/99→11/00		RUN72D	MAG74D	ETS74ND	ETS70D1N-ETS74DI	476420ES
PASSAT Variant 2.8 V6 4motion	(3B5)	09/99→11/00		RUN72D	MAG74D	ETS74ND	ETS70D1N-ETS74DI	476420ES
PASSAT Variant 2.8 V6	(3B5)	06/97→11/00		RUN72D	MAG74D	ETS74ND	ETS70D1N-ETS74DI	476420ES
PASSAT Variant 2.8 V6 Syncro/4motion	(3B5)	06/97→11/00		RUN72D	MAG74D	ETS74ND	ETS70D1N-ETS74DI	476420ES
PASSAT Variant 1.9 TDI	(3B5)	06/97→11/00		RUN72D	MAG74D	ETS74ND	ETS70D1N-ETS74DI	476420ES
PASSAT Variant 1.9 TDI	(3B5)	02/00→11/00		RUN72D	MAG74D	ETS74ND	ETS70D1N-ETS74DI	476420ES
PASSAT Variant 1.9 TDI	(3B5)	06/97→11/00		RUN72D	MAG74D	ETS74ND	ETS70D1N-ETS74DI	476420ES
PASSAT Variant 1.9 TDI Syncro/4motion	(3B5)	06/97→11/00		RUN72D	MAG74D	ETS74ND	ETS70D1N-ETS74DI	476420ES
PASSAT Variant 1.9 TDI	(3B5)	08/98→11/00		RUN72D	MAG74D	ETS74ND	ETS70D1N-ETS74DI	476420ES
PASSAT Variant 1.9 TDI 4motion	(3B5)	08/99→11/00		RUN72D	MAG74D	ETS74ND	ETS70D1N-ETS74DI	476420ES
PASSAT Variant 2.5 TDI	(3B5)	07/98→11/00		RUN72D	MAG74D	ETS74ND	ETS70D1N-ETS74DI	476420ES
PASSAT Variant 2.5 TDI Syncro/4motion	(3B5)	12/98→11/00		RUN72D	MAG74D	ETS74ND	ETS70D1N-ETS74DI	476420ES
PASSAT 1.6	(3B3)	11/00→05/05		RUN62D	MAG62D	ETS62ND	ETS60D3N	438320ES
PASSAT 1.8	(3B3)	03/03→03/05		RUN62D	MAG62D	ETS62ND	ETS60D3N	438320ES
PASSAT 1.8 T 20V	(3B3)	11/00→05/05		RUN62D	MAG62D	ETS62ND	ETS60D3N	438320ES
PASSAT 1.8 T	(3B3)	02/01→05/05		RUN62D	MAG62D	ETS62ND	ETS60D3N	438320ES
PASSAT 1.8 4motion	(3B3)	03/01→05/05		RUN62D	MAG62D	ETS62ND	ETS60D3N	438320ES
PASSAT 2.0	(3B3)	11/00→05/05		RUN62D	MAG62D	ETS62ND	ETS60D3N	438320ES
PASSAT 2.0 4motion	(3B3)	11/00→05/05		RUN62D	MAG62D	ETS62ND	ETS60D3N	438320ES
PASSAT 2.0	(3B3)	11/01→05/05		RUN62D	MAG62D	ETS62ND	ETS60D3N	438320ES
PASSAT 2.3 V5	(3B3)	11/00→05/05		RUN72D	MAG74D	ETS74ND	ETS70D1N-ETS74DI	476420ES
PASSAT 2.3 V5 4motion	(3B3)	11/00→05/05		RUN72D	MAG74D	ETS74ND	ETS70D1N-ETS74DI	476420ES

	Design		START	RUN	MAGIS	ETS	ETS alternative	ES
VOLKSWAGEN								
PASSAT 2.8	(3B3)	05/02→05/03		RUN72D	MAG74D	ETS74ND	ETS70D1N-ETS74DI	476420ES
PASSAT 2.8 4motion	(3B3)	11/00→05/05			MAG82D	ETS80ND		
PASSAT 4.0 W8 4motion	(3B3)	09/01→05/05			MAG82D	ETS80ND		
PASSAT 1.9 TDI	(3B3)	11/00→05/05		RUN72D	MAG74D	ETS74ND	ETS70D1N-ETS74DI	476420ES
PASSAT 1.9 TDI	(3B3)	11/00→05/05		RUN72D	MAG74D	ETS74ND	ETS70D1N-ETS74DI	476420ES
PASSAT 1.9 TDI 4motion	(3B3)	11/00→05/05		RUN72D	MAG74D	ETS74ND	ETS70D1N-ETS74DI	476420ES
PASSAT 2.0 TDI	(3B3)	12/03→05/05		RUN72D	MAG74D	ETS74ND	ETS70D1N-ETS74DI	476420ES
PASSAT 2.5 TDI	(3B3)	11/00→05/05			MAG82D	ETS80ND		
PASSAT 2.5 TDI 4motion	(3B3)	11/00→05/05			MAG82D	ETS80ND		
PASSAT 2.5 TDI	(3B3)	05/03→05/05			MAG82D	ETS80ND		
PASSAT 2.5 TDI 4motion	(3B3)	01/03→05/05			MAG82D	ETS80ND		
PASSAT Variant 1.6	(3B6)	11/00→05/05		RUN62D	MAG62D	ETS62ND	ETS60D3N	438320ES
PASSAT Variant 1.8 T 20V	(3B6)	11/00→05/05		RUN62D	MAG62D	ETS62ND	ETS60D3N	438320ES
PASSAT Variant 1.8 4motion	(3B6)	03/01→05/05		RUN62D	MAG62D	ETS62ND	ETS60D3N	438320ES
PASSAT Variant 2.0	(3B6)	11/00→05/05		RUN62D	MAG62D	ETS62ND	ETS60D3N	438320ES
PASSAT Variant 2.0 4motion	(3B6)	11/00→05/05		RUN62D	MAG62D	ETS62ND	ETS60D3N	438320ES
PASSAT Variant 2.0	(3B6)	11/01→05/05		RUN62D	MAG62D	ETS62ND	ETS60D3N	438320ES
PASSAT Variant 2.3 VR5	(3B6)	11/00→05/05		RUN72D	MAG74D	ETS74ND	ETS70D1N-ETS74DI	476420ES
PASSAT Variant 2.3 VR5 4motion	(3B6)	11/00→05/05		RUN72D	MAG74D	ETS74ND	ETS70D1N-ETS74DI	476420ES
PASSAT Variant 2.8 4motion	(3B6)	11/00→05/05			MAG82D	ETS80ND		
PASSAT Variant 4.0 W8 4motion	(3B6)	09/01→05/05			MAG82D	ETS80ND		
PASSAT Variant 1.9 TDI	(3B6)	11/00→05/05		RUN72D	MAG74D	ETS74ND	ETS70D1N-ETS74DI	476420ES
PASSAT Variant 1.9 TDI	(3B6)	11/00→05/05		RUN72D	MAG74D	ETS74ND	ETS70D1N-ETS74DI	476420ES
PASSAT Variant 1.9 TDI 4motion	(3B6)	11/00→05/05		RUN72D	MAG74D	ETS74ND	ETS70D1N-ETS74DI	476420ES
PASSAT Variant 2.0 TDI	(3B6)	12/03→05/05		RUN72D	MAG74D	ETS74ND	ETS70D1N-ETS74DI	476420ES
PASSAT Variant 2.5 TDI	(3B6)	11/00→05/05			MAG82D	ETS80ND		
PASSAT Variant 2.5 TDI 4motion	(3B6)	11/00→05/05			MAG82D	ETS80ND		
PASSAT Variant 2.5 TDI	(3B6)	05/03→05/05			MAG82D	ETS80ND		
PASSAT Variant 2.5 TDI 4motion	(3B6)	01/03→05/05			MAG82D	ETS80ND		
PASSAT 1.4 TSI	Stop/Start , RB , B	05/07→	AGM70D	RUN50D				
PASSAT 1.4 TSI EcoFuel	(3C2)	01/09→		RUN50D	MAG50D	ETS50ND	ETS50D3N-ETS50D4N	
PASSAT 1.6	(3C2)	05/05→		RUN62D				
PASSAT 1.6 FSI	(3C2)	03/05→		RUN62D				
PASSAT 1.8 TSI	(3C2)	11/09→		RUN62D				
PASSAT 1.8 TSI	(3C2)	05/07→		RUN62D	MAG62D	ETS62ND	ETS60D3N	438320ES
PASSAT 2.0 FSI	(3C2)	03/05→		RUN62D				
PASSAT 2.0 FSI 4motion	(3C2)	09/05→		RUN62D				
PASSAT 2.0 FSI	(3C2)	08/07→		RUN62D				
PASSAT 2.0 TFSI	(3C2)	07/05→		RUN62D				
PASSAT 3.2 FSI	(3C2)	11/05→	AGM70D	RUN72D	MAG74D	ETS74ND	ETS70D1N-ETS74DI	476420ES
PASSAT 3.2 FSI 4motion	(3C2)	11/05→		RUN72D	MAG74D	ETS74ND	ETS70D1N-ETS74DI	476420ES
PASSAT 3.6 FSi	(3C2)	06/05→07/07	AGM70D	RUN72D	MAG74D	ETS74ND	ETS70D1N-ETS74DI	476420ES
PASSAT 3.6 FSI 4motion	(3C2)	09/05→	AGM70D	RUN72D	MAG74D	ETS74ND	ETS70D1N-ETS74DI	476420ES
PASSAT 3.6 R36 4motion	(3C2)	04/07→		RUN72D	MAG74D	ETS74ND	ETS70D1N-ETS74DI	476420ES
PASSAT 1.6 TDI	Stop/Start , RB , B	08/09→	AGM70D					
PASSAT 1.9 TDI	(3C2)	03/05→		RUN72D	MAG74D	ETS74ND	ETS70D1N-ETS74DI	476420ES
PASSAT 2.0 TDI	(3C2)	11/08→		RUN72D	MAG74D	ETS74ND	ETS70D1N-ETS74DI	476420ES

	Design		START	RUN	MAGIS	ETS	ETS alternative	ES
VOLKSWAGEN								
PASSAT 2.0 TDI	(3C2)	11/05→05/06		RUN72D	MAG74D	ETS74ND	ETS70D1N-ETS74DI	476420ES
PASSAT 2.0 TDI	(3C2)	08/05→07/06		RUN72D	MAG74D	ETS74ND	ETS70D1N-ETS74DI	476420ES
PASSAT 2.0 TDI	(3C2)	03/05→		RUN72D	MAG74D	ETS74ND	ETS70D1N-ETS74DI	476420ES
PASSAT 2.0 TDI	(3C2)	03/05→		RUN72D	MAG74D	ETS74ND	ETS70D1N-ETS74DI	476420ES
PASSAT 2.0 TDI 4motion	(3C2)	03/05→		RUN72D	MAG74D	ETS74ND	ETS70D1N-ETS74DI	476420ES
PASSAT 2.0 TDI 16V	(3C2)	03/05→		RUN72D	MAG74D	ETS74ND	ETS70D1N-ETS74DI	476420ES
PASSAT 2.0 TDI 16V 4motion	(3C2)	03/05→		RUN72D	MAG74D	ETS74ND	ETS70D1N-ETS74DI	476420ES
PASSAT 2.0 TDI	(3C2)	08/05→		RUN72D	MAG74D	ETS74ND	ETS70D1N-ETS74DI	476420ES
PASSAT 2.0 TDI	(3C2)	08/05→		RUN72D	MAG74D	ETS74ND	ETS70D1N-ETS74DI	476420ES
PASSAT 2.0 TDI	Stop/Start , RB , B	06/08→	AGM70D					
PASSAT 2.0 TDI 4motion	(3C2)	05/09→		RUN72D	MAG74D	ETS74ND	ETS70D1N-ETS74DI	476420ES
PASSAT Variant 1.4 TSI	(3C5)	05/07→		RUN50D				
PASSAT Variant 1.4 TSI EcoFuel	(3C5)	01/09→		RUN50D	MAG50D	ETS50ND	ETS50D3N-ETS50D4N	
PASSAT Variant 1.6	(3C5)	08/05→		RUN62D				
PASSAT Variant 1.6 FSI	(3C5)	08/05→		RUN62D				
PASSAT Variant 1.8 TSI	(3C5)	11/09→		RUN62D	MAG62D	ETS62ND	ETS60D3N	438320ES
PASSAT Variant 1.8 TSI	(3C5)	05/07→		RUN62D	MAG62D	ETS62ND	ETS60D3N	438320ES
PASSAT Variant 2.0 FSI	(3C5)	08/05→		RUN62D				
PASSAT Variant 2.0 FSI 4motion	(3C5)	09/05→		RUN62D	MAG62D	ETS62ND	ETS60D3N	438320ES
PASSAT Variant 2.0 FSI	(3C5)	08/07→		RUN62D				
PASSAT Variant 2.0 TFSI	(3C5)	08/05→		RUN62D				
PASSAT Variant 3.2 FSI	(3C5)	11/05→		RUN72D	MAG74D	ETS74ND	ETS70D1N-ETS74DI	476420ES
PASSAT Variant 3.2 FSI 4motion	(3C5)	11/05→		RUN72D	MAG74D	ETS74ND	ETS70D1N-ETS74DI	476420ES
PASSAT Variant 3.6 FSI	(3C5)	09/05→		RUN72D	MAG74D	ETS74ND	ETS70D1N-ETS74DI	476420ES
PASSAT Variant 3.6 FSI 4motion	(3C5)	09/05→		RUN72D	MAG74D	ETS74ND	ETS70D1N-ETS74DI	476420ES
PASSAT Variant 3.6 R36 4motion	(3C5)	04/07→		RUN72D	MAG74D	ETS74ND	ETS70D1N-ETS74DI	476420ES
PASSAT Variant 1.9 TDI	(3C5)	08/05→		RUN72D	MAG74D	ETS74ND	ETS70D1N-ETS74DI	476420ES
PASSAT Variant 2.0 TDI	(3C5)	11/08→		RUN72D	MAG74D	ETS74ND	ETS70D1N-ETS74DI	476420ES
PASSAT Variant 2.0 TDI	(3C5)	08/05→		RUN72D	MAG74D	ETS74ND	ETS70D1N-ETS74DI	476420ES
PASSAT Variant 2.0 TDI	(3C5)	08/05→		RUN72D	MAG74D	ETS74ND	ETS70D1N-ETS74DI	476420ES
PASSAT Variant 2.0 TDI	(3C5)	08/05→		RUN72D	MAG74D	ETS74ND	ETS70D1N-ETS74DI	476420ES
PASSAT Variant 2.0 TDI 4motion	(3C5)	08/05→		RUN72D	MAG74D	ETS74ND	ETS70D1N-ETS74DI	476420ES
PASSAT Variant 2.0 TDI 16V	(3C5)	08/05→		RUN72D	MAG74D	ETS74ND	ETS70D1N-ETS74DI	476420ES
PASSAT Variant 2.0 TDI 16V 4motion	(3C5)	08/05→		RUN72D	MAG74D	ETS74ND	ETS70D1N-ETS74DI	476420ES
PASSAT Variant 2.0 BlueTDI	(3C5)	01/09→		RUN72D	MAG74D	ETS74ND	ETS70D1N-ETS74DI	476420ES
PASSAT Variant 2.0 TDi	(3C5)	08/05→		RUN72D	MAG74D	ETS74ND	ETS70D1N-ETS74DI	476420ES
PASSAT Variant 2.0 TDI	(3C5)	08/05→		RUN72D	MAG74D	ETS74ND	ETS70D1N-ETS74DI	476420ES
PASSAT CC 1.8 TSI		06/08→		RUN62D	MAG62D	ETS62ND	ETS60D3N	438320ES
PASSAT CC 2.0 TSI		06/08→		RUN62D	MAG62D	ETS62ND	ETS60D3N	438320ES
PASSAT CC 3.6 4motion		06/08→		RUN72D	MAG74D	ETS74ND	ETS70D1N-ETS74DI	476420ES
PASSAT CC 2.0 TDI		06/08→		RUN72D	MAG74D	ETS74ND	ETS70D1N-ETS74DI	476420ES
PASSAT CC 2.0 TDI		06/08→		RUN72D	MAG74D	ETS74ND	ETS70D1N-ETS74DI	476420ES
PASSAT CC 2.0 TDI 4motion		08/09→		RUN72D	MAG74D	ETS74ND	ETS70D1N-ETS74DI	476420ES
PASSAT CC 2.0 BlueTDI		05/09→		RUN72D	MAG74D	ETS74ND	ETS70D1N-ETS74DI	476420ES
PASSAT CC 2.0 TDI		06/08→		RUN72D	MAG74D	ETS74ND	ETS70D1N-ETS74DI	476420ES
PHAETON 3.2 V6	(3D2)	04/02→		RUN72D	MAG74D	ETS74ND	ETS70D1N-ETS74DI	476420ES
PHAETON 3.2 V6 4motion	(3D2)	02/04→		RUN72D	MAG74D	ETS74ND	ETS70D1N-ETS74DI	476420ES

	Design		START	RUN	MAGIS	ETS	ETS alternative	ES
VOLKSWAGEN								
PHAETON 3.6 V6 4motion	(3D2)	11/08→		RUN72D	MAG74D	ETS74ND	ETS70D1N-ETS74DI	476420ES
PHAETON 4.2 V8 4motion	(3D2)	05/03→			MAG82D	ETS80ND		
PHAETON 6.0 W12 4motion	(3D2)	04/02→			MAG82D	ETS80ND		
PHAETON 6.0 W12 4motion	(3D2)	05/05→			MAG82D	ETS80ND		
PHAETON 3.0 V6 TDI 4motion	(3D2)	09/04→			MAG82D	ETS80ND		
PHAETON 3.0 V6 TDI 4motion	(3D2)	06/07→			MAG82D	ETS80ND		
PHAETON 3.0 V6 TDI 4motion	(3D2)	11/08→			MAG82D	ETS80ND		
PHAETON 5.0 V10 TDI 4motion	(3D2)	11/02→		RUN95D		ETS92ND-ETS95D1N		434440ES
POLO 1.4 D	(86C, 80)	10/90→09/94		RUN62D	MAG62D	ETS62ND	ETS60D3N	438320ES
POLO CLASSIC 1.4 D	(86C, 80)	10/90→09/94			MAG72DB	ETS71NDB		
POLO Coupe 1.3	(86C, 80)	03/91→09/94			MAG44DB	ETS44NDB		ES45NDB
POLO Coupe 1.3 G40	(86C, 80)	08/90→09/94			MAG44DB	ETS44NDB		ES45NDB
POLO Coupe 1.4 D	(86C, 80)	08/90→09/94		RUN62D	MAG62D	ETS62ND	ETS60D3N	438320ES
POLO Box 1.0	(86CF)	08/92→07/94		RUN50D	MAG50D	ETS50ND	ETS50D3N-ETS50D4N	
POLO Box 1.3	(86CF)	08/92→07/94		RUN50D	MAG50D	ETS50ND	ETS50D3N-ETS50D4N	
POLO Box 1.4 D	(86CF)	08/92→07/94			MAG62DB	ETS60NDB-ETS50NDB		ES60NDB
POLO 45 1.0	(6N1)	10/94→09/96			MAG44DB	ETS44NDB		ES45NDB
POLO 50 1.0	(6N1)	09/96→10/99			MAG44DB	ETS44NDB		ES45NDB
POLO 55 1.3	(6N1)	10/94→07/95		RUN50D	MAG50D-MAG45D	ETS50ND-ETS45ND	ETS50D3N-ETS50D4N	436210ES
POLO 55 1.4	(6N1)	08/95→10/99		RUN50D	MAG50D-MAG45D	ETS50ND-ETS45ND	ETS50D3N-ETS50D4N	436210ES
POLO 60 1.4	(6N1)	07/95→10/99		RUN50D	MAG50D-MAG45D	ETS50ND-ETS45ND	ETS50D3N-ETS50D4N	436210ES
POLO 100 1.4 16V	(6N1)	04/96→10/99			MAG44DB	ETS44NDB		ES45NDB
POLO 75 1.6	(6N1)	10/94→10/99		RUN50D	MAG50D	ETS50ND	ETS50D3N-ETS50D4N	
POLO 120 1.6 16V GTI	(6N1)	09/98→10/99		RUN62D	MAG62D	ETS62ND	ETS60D3N	438320ES
POLO 1.7 SDI	(6N1)	04/97→10/99		RUN62D	MAG62D	ETS62ND	ETS60D3N	438320ES
POLO 60 1.7 SDI	(6N1)	08/97→10/99		RUN62D	MAG62D	ETS62ND	ETS60D3N	438320ES
POLO 64 1.9 D	(6N1)	10/94→10/99		RUN62D	MAG62D	ETS62ND	ETS60D3N	438320ES
POLO 64 1.9 SDI	(6N1)	07/96→10/99		RUN62D	MAG62D	ETS62ND	ETS60D3N	438320ES
POLO Box 1.0	(6NF)	10/94→12/99			MAG44DB	ETS44NDB		ES45NDB
POLO Box 1.4	(6NF)	05/98→12/99		RUN50D	MAG50D	ETS50ND	ETS50D3N-ETS50D4N	
POLO Box 1.6	(6NF)	09/94→12/95		RUN50D	MAG50D	ETS50ND	ETS50D3N-ETS50D4N	
POLO Box 1.7 SDI	(6NF)	08/97→12/99		RUN62D	MAG62D	ETS62ND	ETS60D3N	438320ES
POLO Box 1.9 D	(6NF)	10/94→12/99		RUN62D	MAG62D	ETS62ND	ETS60D3N	438320ES
POLO Box 1.9 SDI	(6NF)	07/96→12/99		RUN62D	MAG62D	ETS62ND	ETS60D3N	438320ES
POLO CLASSIC 1.0	(6KV2)	08/96→12/01			MAG44DB	ETS44NDB		ES45NDB
POLO CLASSIC 54 1.4	(6KV2)	01/98→08/99		RUN50D	MAG50D-MAG45D	ETS50ND-ETS45ND	ETS50D3N-ETS50D4N	436210ES
POLO CLASSIC 60 1.4	(6KV2)	12/95→09/01		RUN50D	MAG50D-MAG45D	ETS50ND-ETS45ND	ETS50D3N-ETS50D4N	436210ES
POLO CLASSIC 75 1.4 16V	(6KV2)	10/99→09/01		RUN50D	MAG50D-MAG45D	ETS50ND-ETS45ND	ETS50D3N-ETS50D4N	436210ES
POLO CLASSIC 1.4	(6KV2)	05/96→07/02		RUN50D	MAG50D-MAG45D	ETS50ND-ETS45ND	ETS50D3N-ETS50D4N	436210ES
POLO CLASSIC 75 1.6	(6KV2)	11/95→09/97		RUN50D	MAG50D-MAG45D	ETS50ND-ETS45ND	ETS50D3N-ETS50D4N	436210ES
POLO CLASSIC 1.6	(6KV2)	05/96→09/01		RUN50D	MAG50D-MAG45D	ETS50ND-ETS45ND	ETS50D3N-ETS50D4N	436210ES
POLO CLASSIC 100 1.6	(6KV2)	12/95→09/01		RUN50D	MAG50D-MAG45D	ETS50ND-ETS45ND	ETS50D3N-ETS50D4N	436210ES
POLO CLASSIC 75 1.6	(6KV2)	11/95→09/01		RUN50D	MAG50D-MAG45D	ETS50ND-ETS45ND	ETS50D3N-ETS50D4N	436210ES
POLO CLASSIC 90 1.8	(6KV2)	01/97→09/01		RUN50D	MAG50D	ETS50ND	ETS50D3N-ETS50D4N	
POLO CLASSIC 1.8	(6KV2)	05/96→09/01		RUN50D	MAG50D	ETS50ND	ETS50D3N-ETS50D4N	
POLO CLASSIC 1.8	(6KV2)	05/96→09/01		RUN50D	MAG50D	ETS50ND	ETS50D3N-ETS50D4N	
POLO CLASSIC 1.8	(6KV2)	08/00→07/02		RUN50D	MAG50D	ETS50ND	ETS50D3N-ETS50D4N	

	Design		START	RUN	MAGIS	ETS	ETS alternative	ES
VOLKSWAGEN								
POLO CLASSIC 1.8	(6KV2)	04/97→07/98		RUN50D	MAG50D	ETS50ND	ETS50D3N-ETS50D4N	
POLO CLASSIC 2.0	(6KV2)	06/99→07/05		RUN62D	MAG62D	ETS62ND	ETS60D3N	438320ES
POLO CLASSIC 2.0	(6KV2)	08/99→09/01		RUN62D	MAG62D	ETS62ND	ETS60D3N	438320ES
POLO CLASSIC 57 1.7 SDI	(6KV2)	07/97→09/01		RUN62D	MAG62D	ETS62ND	ETS60D3N	438320ES
POLO CLASSIC 64 1,9 D	(6KV2)	01/96→10/96		RUN62D	MAG62D	ETS62ND	ETS60D3N	438320ES
POLO CLASSIC 64 1.9 SDI	(6KV2)	12/95→08/99		RUN62D	MAG62D	ETS62ND	ETS60D3N	438320ES
POLO CLASSIC 1.9 D	(6KV2)	06/96→09/01		RUN62D	MAG62D	ETS62ND	ETS60D3N	438320ES
POLO CLASSIC 68 1.9 SDI	(6KV2)	08/99→09/01		RUN62D	MAG62D	ETS62ND	ETS60D3N	438320ES
POLO CLASSIC 90 1.9 TDI	(6KV2)	09/96→09/01		RUN62D	MAG62D	ETS62ND	ETS60D3N	438320ES
POLO CLASSIC 110 1.9 TDI	(6KV2)	06/98→09/01		RUN62D	MAG62D	ETS62ND	ETS60D3N	438320ES
POLO CLASSIC 1.8 Hybrid	(6KV2)	04/97→09/98		RUN50D	MAG50D	ETS50ND	ETS50D3N-ETS50D4N	
POLO Variant 1.4	(6KV5)	12/98→09/01		RUN50D	MAG50D-MAG45D	ETS50ND-ETS45ND	ETS50D3N-ETS50D4N	436210ES
POLO Variant 1.4	(6KV5)	05/97→09/01		RUN50D	MAG50D-MAG45D	ETS50ND-ETS45ND	ETS50D3N-ETS50D4N	436210ES
POLO Variant 1.4 16V	(6KV5)	10/99→09/01		RUN50D	MAG50D-MAG45D	ETS50ND-ETS45ND	ETS50D3N-ETS50D4N	436210ES
POLO Variant 1.6	(6KV5)	05/97→09/01		RUN50D	MAG50D-MAG45D	ETS50ND-ETS45ND	ETS50D3N-ETS50D4N	436210ES
POLO Variant 1.6	(6KV5)	05/97→09/01		RUN50D	MAG50D-MAG45D	ETS50ND-ETS45ND	ETS50D3N-ETS50D4N	436210ES
POLO Variant 1.8	(6KV5)	05/97→09/01		RUN62D	MAG62D	ETS62ND	ETS60D3N	438320ES
POLO Variant 1.7 SDI	(6KV5)	08/97→09/01		RUN62D	MAG62D	ETS62ND	ETS60D3N	438320ES
POLO Variant 1.9 SDI	(6KV5)	06/97→09/01		RUN62D	MAG62D	ETS62ND	ETS60D3N	438320ES
POLO Variant 1.9 SDI	(6KV5)	08/99→09/01		RUN62D				
POLO Variant 1.9 TDI	(6KV5)	05/97→09/01		RUN62D	MAG62D	ETS62ND	ETS60D3N	438320ES
POLO Variant 1.9 TDI	(6KV5)	06/98→09/01		RUN62D	MAG62D	ETS62ND	ETS60D3N	438320ES
POLO PLAYA 1.4		05/96→07/02		RUN50D	MAG50D-MAG45D	ETS50ND-ETS45ND	ETS50D3N-ETS50D4N	436210ES
POLO 1.0	(6N2)	10/99→09/01		RUN50D	MAG50D-MAG45D	ETS50ND-ETS45ND	ETS50D3N-ETS50D4N	436210ES
POLO 1.4	(6N2)	10/99→09/01		RUN50D	MAG50D-MAG45D	ETS50ND-ETS45ND	ETS50D3N-ETS50D4N	436210ES
POLO 1.4	(6N2)	10/99→09/01		RUN50D	MAG50D-MAG45D	ETS50ND-ETS45ND	ETS50D3N-ETS50D4N	436210ES
POLO 1.4 16V	(6N2)	10/99→09/01		RUN50D	MAG50D-MAG45D	ETS50ND-ETS45ND	ETS50D3N-ETS50D4N	436210ES
POLO 1.4 16V	(6N2)	10/99→09/01		RUN50D	MAG50D-MAG45D	ETS50ND-ETS45ND	ETS50D3N-ETS50D4N	436210ES
POLO 1.6 16V GTI	(6N2)	10/99→09/01		RUN62D	MAG62D	ETS62ND	ETS60D3N	438320ES
POLO 1.4 TDI	(6N2)	10/99→09/01		RUN72D	MAG74D	ETS74ND	ETS70D1N-ETS74DI	476420ES
POLO 1.7 SDI	(6N2)	10/99→09/01		RUN62D	MAG62D	ETS62ND	ETS60D3N	438320ES
POLO 1.9 D	(6N2)	10/99→09/01		RUN62D	MAG62D	ETS62ND	ETS60D3N	438320ES
POLO 1.9 SDI	(6N2)	10/99→09/01		RUN62D	MAG62D	ETS62ND	ETS60D3N	438320ES
POLO 1.2	(9N_)	01/02→05/07		RUN50D	MAG50D-MAG45D	ETS50ND-ETS45ND	ETS50D3N-ETS50D4N	436210ES
POLO 1.2	(9N_)	05/07→		RUN50D	MAG50D-MAG45D	ETS50ND-ETS45ND	ETS50D3N-ETS50D4N	436210ES
POLO 1.2 12V	(9N_)	10/01→07/07		RUN50D	MAG50D-MAG45D	ETS50ND-ETS45ND	ETS50D3N-ETS50D4N	436210ES
POLO 1.2 12V	(9N_)	05/07→		RUN50D	MAG50D-MAG45D	ETS50ND-ETS45ND	ETS50D3N-ETS50D4N	436210ES
POLO 1.4 16V	(9N_)	10/01→05/08		RUN50D	MAG50D-MAG45D	ETS50ND-ETS45ND	ETS50D3N-ETS50D4N	436210ES
POLO 1.4 16V	(9N_)	05/06→		RUN50D	MAG50D-MAG45D	ETS50ND-ETS45ND	ETS50D3N-ETS50D4N	436210ES
POLO 1.4	(9N_)	06/05→		RUN50D	MAG50D	ETS50ND	ETS50D3N-ETS50D4N	
POLO 1.4 FSI	(9N_)	02/02→07/06		RUN50D	MAG50D-MAG45D	ETS50ND-ETS45ND	ETS50D3N-ETS50D4N	436210ES
POLO 1.4 16V	(9N_)	10/01→05/08		RUN50D	MAG50D-MAG45D	ETS50ND-ETS45ND	ETS50D3N-ETS50D4N	436210ES
POLO 1.6 16V	(9N_)	05/06→		RUN50D	MAG50D	ETS50ND	ETS50D3N-ETS50D4N	
POLO 1.8 GTI	(9N_)	09/05→		RUN62D	MAG62D	ETS62ND	ETS60D3N	438320ES
POLO 1.8 GTi Cup Edition	(9N_)	05/06→		RUN62D	MAG62D	ETS62ND	ETS60D3N	438320ES
POLO 2.0	(9N_)	10/04→		RUN62D	MAG62D	ETS62ND	ETS60D3N	438320ES
POLO 1.4 TDI	(9N_)	04/05→		RUN62D	MAG62D	ETS62ND	ETS60D3N	438320ES

	Design		START	RUN	MAGIS	ETS	ETS alternative	ES
VOLKSWAGEN								
POLO 1.4 TDI	(9N_)	10/01→06/05		RUN62D	MAG62D	ETS62ND	ETS60D3N	438320ES
POLO 1.4 TDI	(9N_)	04/05→		RUN62D	MAG62D	ETS62ND	ETS60D3N	438320ES
POLO 1.9 SDI	(9N_)	10/01→		RUN62D	MAG62D	ETS62ND	ETS60D3N	438320ES
POLO 1.9 TDI	(9N_)	10/01→		RUN62D	MAG62D	ETS62ND	ETS60D3N	438320ES
POLO 1.9 TDI	(9N_)	11/03→		RUN62D	MAG62D	ETS62ND	ETS60D3N	438320ES
POLO Saloon 1.4		07/03→		RUN50D	MAG50D-MAG45D	ETS50ND-ETS45ND	ETS50D3N-ETS50D4N	436210ES
POLO Saloon 1.4		12/03→05/05		RUN50D	MAG50D-MAG45D	ETS50ND-ETS45ND	ETS50D3N-ETS50D4N	436210ES
POLO Saloon 1.4		11/03→		RUN50D	MAG50D-MAG45D	ETS50ND-ETS45ND	ETS50D3N-ETS50D4N	436210ES
POLO Saloon 1.6		09/02→		RUN50D	MAG50D	ETS50ND	ETS50D3N-ETS50D4N	
POLO Saloon 1.6 Total Flex		10/04→		RUN50D	MAG50D	ETS50ND	ETS50D3N-ETS50D4N	
POLO Saloon 2.0		09/02→		RUN62D	MAG62D	ETS62ND	ETS60D3N	438320ES
POLO Saloon 1.4 TDI		07/03→		RUN62D	MAG62D	ETS62ND	ETS60D3N	438320ES
POLO Saloon 1.9 SDI		09/02→		RUN62D	MAG62D	ETS62ND	ETS60D3N	438320ES
POLO Saloon 1.9 TDi		09/02→		RUN62D	MAG62D	ETS62ND	ETS60D3N	438320ES
POLO 1.2	(6R_)	06/09→		RUN50D	MAG50D	ETS50ND	ETS50D3N-ETS50D4N	
POLO 1.2	(6R_)	06/09→		RUN50D	MAG50D	ETS50ND	ETS50D3N-ETS50D4N	
POLO 1.2 TSI	(6R_)	11/09→		RUN50D	MAG50D	ETS50ND	ETS50D3N-ETS50D4N	
POLO 1.4	(6R_)	06/09→		RUN50D	MAG50D	ETS50ND	ETS50D3N-ETS50D4N	
POLO 1.4 GTI	(6R_)	05/10→		RUN50D				
POLO 1.2 TDI	(6R_)	10/09→		RUN62D	MAG62D	ETS62ND	ETS60D3N	438320ES
POLO 1.6 TDI	Stop/Start , RB , A	06/09→	AGM70D	RUN62D	MAG62D	ETS62ND	ETS60D3N	438320ES
POLO 1.6 TDI	(6R_)	06/09→		RUN62D	MAG62D	ETS62ND	ETS60D3N	438320ES
SCIROCCO 1.4 TSI	Stop/Start , RB , A	09/08→	AGM70D	RUN62D				
SCIROCCO 1.4 TSI	(137)	09/08→		RUN62D	MAG62D	ETS62ND	ETS60D3N	438320ES
SCIROCCO 2.0 TSI	(137)	09/08→		RUN62D	MAG62D	ETS62ND	ETS60D3N	438320ES
SCIROCCO 2.0 TSI	(137)	11/09→		RUN62D	MAG62D	ETS62ND	ETS60D3N	438320ES
SCIROCCO 2.0 R	(137)	11/09→		RUN62D	MAG62D	ETS62ND	ETS60D3N	438320ES
SCIROCCO 2.0 TDI	(137)	09/08→		RUN72D	MAG74D	ETS74ND	ETS70D1N-ETS74DI	476420ES
SCIROCCO 2.0 TDI	(137)	05/09→		RUN72D	MAG74D	ETS74ND	ETS70D1N-ETS74DI	476420ES
SHARAN 1.8 T 20V	(7M8, 7M9, 7M6)	09/97→		RUN62D	MAG62D	ETS62ND	ETS60D3N	438320ES
SHARAN 2.0	(7M8, 7M9, 7M6)	09/95→		RUN62D	MAG62D	ETS62ND	ETS60D3N	438320ES
SHARAN 2.0 LPG	(7M8, 7M9, 7M6)	05/08→		RUN62D	MAG62D	ETS62ND	ETS60D3N	438320ES
SHARAN 2.0	(7M8, 7M9, 7M6)	09/95→02/00		RUN62D	MAG62D	ETS62ND	ETS60D3N	438320ES
SHARAN 2.8 VR6	(7M8, 7M9, 7M6)	09/95→04/00		RUN72D	MAG74D	ETS74ND	ETS70D1N-ETS74DI	476420ES
SHARAN 2.8 VR6 Syncro	(7M8, 7M9, 7M6)	11/96→04/00		RUN72D	MAG74D	ETS74ND	ETS70D1N-ETS74DI	476420ES
SHARAN 2.8 V6 24V	(7M8, 7M9, 7M6)	04/00→		RUN72D	MAG74D	ETS74ND	ETS70D1N-ETS74DI	476420ES
SHARAN 2.8 V6 24V 4motion	(7M8, 7M9, 7M6)	04/00→		RUN72D	MAG74D	ETS74ND	ETS70D1N-ETS74DI	476420ES
SHARAN 1.9 TDI	(7M8, 7M9, 7M6)	09/95→		RUN72D	MAG74D	ETS74ND	ETS70D1N-ETS74DI	476420ES
SHARAN 1.9 TDI	(7M8, 7M9, 7M6)	09/96→04/00		RUN72D	MAG74D	ETS74ND	ETS70D1N-ETS74DI	476420ES
SHARAN 1.9 TDI	(7M8, 7M9, 7M6)	04/00→		RUN72D	MAG74D	ETS74ND	ETS70D1N-ETS74DI	476420ES
SHARAN 1.9 TDI 4motion	(7M8, 7M9, 7M6)	04/00→		RUN72D	MAG74D	ETS74ND	ETS70D1N-ETS74DI	476420ES
SHARAN 1.9 TDI	(7M8, 7M9, 7M6)	11/02→		RUN72D	MAG74D	ETS74ND	ETS70D1N-ETS74DI	476420ES
SHARAN 1.9 TDI	(7M8, 7M9, 7M6)	06/05→		RUN72D	MAG74D	ETS74ND	ETS70D1N-ETS74DI	476420ES
SHARAN 2.0 TDI	(7M8, 7M9, 7M6)	11/05→		RUN72D	MAG74D	ETS74ND	ETS70D1N-ETS74DI	476420ES
TIGUAN 1.4 TSI 4motion	(5N_)	09/07→		RUN62D	MAG62D	ETS62ND	ETS60D3N	438320ES
TIGUAN 1.4 TSI	Stop/Start , RB , A	11/08→	AGM70D					
TIGUAN 2.0 TFSI 4motion	(5N_)	09/07→		RUN62D	MAG62D	ETS62ND	ETS60D3N	438320ES

	Design		START	RUN	MAGIS	ETS	ETS alternative	ES
VOLKSWAGEN								
TIGUAN 2.0 TDI	Stop/Start , RB , A	11/08→	AGM70D					
TIGUAN 2.0 TFSI 4motion	(5N_)	09/07→		RUN62D	MAG62D	ETS62ND	ETS60D3N	438320ES
TIGUAN 2.0 TDI 4motion	(5N_)	11/07→		RUN72D	MAG74D	ETS74ND	ETS70D1N-ETS74DI	476420ES
TIGUAN 2.0 TDI 4motion	(5N_)	09/07→		RUN72D	MAG74D	ETS74ND	ETS70D1N-ETS74DI	476420ES
TIGUAN 2.0 TDI 4motion	(5N_)	09/07→		RUN72D	MAG74D	ETS74ND	ETS70D1N-ETS74DI	476420ES
TOUAREG 3.2 V6	(7LA, 7L6, 7L7)	10/02→11/06	AGM70D	RUN95D		ETS92ND-ETS95D1N		434440ES
TOUAREG 3.2 V6	(7LA, 7L6, 7L7)	11/04→11/06		RUN95D		ETS92ND-ETS95D1N		434440ES
TOUAREG 3.6 V6 FSI	(7LA, 7L6, 7L7)	03/06→05/10	AGM70D	RUN95D		ETS92ND-ETS95D1N		434440ES
TOUAREG 4.2 V8	(7LA, 7L6, 7L7)	12/02→11/06	AGM80D	RUN95D		ETS92ND-ETS95D1N		434440ES
TOUAREG 4.2 V8 FSI	(7LA, 7L6, 7L7)	12/06→05/10		RUN95D		ETS92ND-ETS95D1N		434440ES
TOUAREG 6.0 W12	(7LA, 7L6, 7L7)	03/05→05/10	AGM90D	RUN95D		ETS92ND-ETS95D1N		434440ES
TOUAREG 2.5 R5 TDI	(7LA, 7L6, 7L7)	08/03→05/10		RUN95D		ETS92ND-ETS95D1N		434440ES
TOUAREG 2.5 R5 TDI	(7LA, 7L6, 7L7)	01/03→05/10	AGM80D	RUN95D		ETS92ND-ETS95D1N		434440ES
TOUAREG 3.0 TDI	(7LA, 7L6, 7L7)	12/06→05/10		RUN95D		ETS92ND-ETS95D1N		434440ES
TOUAREG 3.0 V6 TDI	(7LA, 7L6, 7L7)	11/04→05/10		RUN95D		ETS92ND-ETS95D1N		434440ES
TOUAREG 3.0 V6 TDI	(7LA, 7L6, 7L7)	11/07→05/10		RUN95D		ETS92ND-ETS95D1N		434440ES
TOUAREG 5.0 V10 TDI	(7LA, 7L6, 7L7)	10/02→05/10	AGM90D	RUN95D		ETS92ND-ETS95D1N		434440ES
TOUAREG 5.0 R50 TDI	(7LA, 7L6, 7L7)	11/07→05/10		RUN95D		ETS92ND-ETS95D1N		434440ES
TOUAREG 3.6 V6 FSI	(7P5)	04/10→		RUN95D				
TOUAREG 3.0 V6 TDI	(7P5)	04/10→		RUN95D				
TOUAREG 4.2 V8 TDI	(7P5)	04/10→		RUN95D				
TOURAN 1.4 TSI	(1T1, 1T2)	02/06→		RUN62D	MAG62D	ETS62ND	ETS60D3N	438320ES
TOURAN 1.4 TSI EcoFuel	(1T1, 1T2)	05/09→		RUN50D	MAG50D	ETS50ND	ETS50D3N-ETS50D4N	
TOURAN 1.4 FSI	(1T1, 1T2)	12/06→		RUN50D	MAG50D	ETS50ND	ETS50D3N-ETS50D4N	
TOURAN 1.6	(1T1, 1T2)	07/03→		RUN62D	MAG62D	ETS62ND	ETS60D3N	438320ES
TOURAN 1.6 FSI	(1T1, 1T2)	02/03→		RUN62D	MAG62D	ETS62ND	ETS60D3N	438320ES
TOURAN 2.0 EcoFuel	(1T1, 1T2)	02/06→		RUN62D	MAG62D	ETS62ND	ETS60D3N	438320ES
TOURAN 2.0 FSI	(1T1, 1T2)	10/04→		RUN62D	MAG62D	ETS62ND	ETS60D3N	438320ES
TOURAN 2.0 FSI	(1T1, 1T2)	10/03→		RUN62D	MAG62D	ETS62ND	ETS60D3N	438320ES
TOURAN 1.9 TDI	(1T1, 1T2)	11/04→		RUN72D	MAG74D	ETS74ND	ETS70D1N-ETS74DI	476420ES
TOURAN 1.9 TDI	(1T1, 1T2)	02/03→		RUN72D	MAG74D	ETS74ND	ETS70D1N-ETS74DI	476420ES
TOURAN 1.9 TDI	(1T1, 1T2)	08/03→		RUN72D	MAG74D	ETS74ND	ETS70D1N-ETS74DI	476420ES
TOURAN 2.0 TDI	(1T1, 1T2)	02/03→			MAG82D	ETS80ND		
TOURAN 2.0 TDI	(1T1, 1T2)	12/05→			MAG82D	ETS80ND		
TOURAN 2.0 TDI 16V	(1T1, 1T2)	08/03→			MAG82D	ETS80ND		
TOURAN 2.0 TDI	(1T1, 1T2)	12/05→			MAG82D	ETS80ND		
VENTO 1.4	(1H2)	11/91→09/98			MAG44DB	ETS44NDB		ES45NDB
VENTO 1.4	(1H2)	11/91→09/98			MAG44DB	ETS44NDB		ES45NDB
VENTO 1.6	(1H2)	09/92→09/98			MAG44DB	ETS44NDB		ES45NDB
VENTO 1.6	(1H2)	10/94→09/98			MAG44DB	ETS44NDB		ES45NDB
VENTO 1.8	(1H2)	11/91→09/98			MAG62DB	ETS60NDB-ETS50NDB		ES60NDB
VENTO 1.8	(1H2)	11/91→09/98			MAG62DB	ETS60NDB-ETS50NDB		ES60NDB
VENTO 2.0	(1H2)	11/91→09/98			MAG62DB	ETS60NDB-ETS50NDB		ES60NDB
VENTO 2.8 VR6	(1H2)	01/92→09/98			MAG62DB	ETS60NDB-ETS50NDB		ES60NDB
VENTO 1.9 SDI	(1H2)	04/97→09/98			MAG72DB	ETS71NDB		
VENTO 1.9 D	(1H2)	11/91→09/98			MAG72DB	ETS71NDB		
VENTO 1.9 TD	(1H2)	11/91→09/98			MAG72DB	ETS71NDB		

	Design		START	RUN	MAGIS	ETS	ETS alternative	ES
VOLKSWAGEN								
VENTO 1.9 TDI	(1H2)	09/93→09/98			MAG72DB	ETS71NDB		
VENTO 1.9 TDI	(1H2)	04/96→09/98			MAG72DB	ETS71NDB		
CRAFTER 30-35 Bus 2.5 TDI	(2E)	04/06→		RUN95D		ETS92ND-ETS95D1N		434440ES
CRAFTER 30-35 Bus 2.5 TDI	(2E)	04/06→		RUN95D		ETS92ND-ETS95D1N		434440ES
CRAFTER 30-35 Bus 2.5 TDI	(2E)	04/06→		RUN95D		ETS92ND-ETS95D1N		434440ES
CRAFTER 30-35 Bus 2.5 TDI	(2E)	04/06→		RUN95D		ETS92ND-ETS95D1N		434440ES
CRAFTER 30-50 Box 2.5 TDI	(2E)	04/06→		RUN95D		ETS92ND-ETS95D1N		434440ES
CRAFTER 30-50 Box 2.5 TDI	(2E)	04/06→		RUN95D		ETS92ND-ETS95D1N		434440ES
CRAFTER 30-50 Box 2.5 TDI	(2E)	04/06→		RUN95D		ETS92ND-ETS95D1N		434440ES
CRAFTER 30-50 Box 2.5 TDI	(2E)	04/06→		RUN95D		ETS92ND-ETS95D1N		434440ES
CRAFTER 30-50 Flatbed / Chassis 2.5 TDI	(2E)	04/06→		RUN95D		ETS92ND-ETS95D1N		434440ES
CRAFTER 30-50 Flatbed / Chassis 2.5 TDI	(2E)	04/06→		RUN95D		ETS92ND-ETS95D1N		434440ES
CRAFTER 30-50 Flatbed / Chassis 2.5 TDI	(2E)	04/06→		RUN95D		ETS92ND-ETS95D1N		434440ES
CRAFTER 30-50 Flatbed / Chassis 2.5 TDI	(2E)	04/06→		RUN95D		ETS92ND-ETS95D1N		434440ES
LT 28-35 I Bus 2.4 TD	(281-363)	09/92→06/96		RUN95D		ETS92ND-ETS95D1N		434440ES
LT 28-35 I Box 2.4 i	(281-363)	03/94→06/96		RUN62D	MAG62D	ETS62ND	ETS60D3N	438320ES
LT 28-35 I Box 2.4 D	(281-363)	07/90→05/96		RUN95D		ETS92ND-ETS95D1N		434440ES
LT 28-35 I Box 2.4 TD	(281-363)	06/92→05/96		RUN95D		ETS92ND-ETS95D1N		434440ES
LT 28-35 I Flatbed / Chassis 2.4 Syncro	(281-363)	08/91→07/92		RUN62D	MAG62D	ETS62ND	ETS60D3N	438320ES
LT 28-35 I Flatbed / Chassis 2.4 i	(281-363)	03/94→06/96		RUN62D	MAG62D	ETS62ND	ETS60D3N	438320ES
LT 28-35 I Flatbed / Chassis 2.4 Syncro	(281-363)	08/92→07/94		RUN62D	MAG62D	ETS62ND	ETS60D3N	438320ES
LT 28-35 I Flatbed / Chassis 2.4 D	(281-363)	08/90→06/96		RUN95D		ETS92ND-ETS95D1N		434440ES
LT 28-35 I Flatbed / Chassis 2.4 D Syncro	(281-363)	08/91→07/92		RUN72D	MAG74D	ETS74ND	ETS70D1N-ETS74DI	476420ES
LT 28-35 I Flatbed / Chassis 2.4 D Syncro	(281-363)	08/91→07/92		RUN72D	MAG74D	ETS74ND	ETS70D1N-ETS74DI	476420ES
LT 28-35 I Flatbed / Chassis 2.4 TD	(281-363)	08/90→08/92		RUN95D		ETS92ND-ETS95D1N		434440ES
LT 28-35 I Flatbed / Chassis 2.4 TD Syncro	(281-363)	08/91→07/92		RUN72D	MAG74D	ETS74ND	ETS70D1N-ETS74DI	476420ES
LT 28-35 I Flatbed / Chassis 2.4 TD	(281-363)	08/92→06/96		RUN95D		ETS92ND-ETS95D1N		434440ES
LT 28-35 I Flatbed / Chassis 2.4 TD Syncro	(281-363)	08/91→07/92		RUN72D	MAG74D	ETS74ND	ETS70D1N-ETS74DI	476420ES
LT 40-55 I Box 2.4 i	(291-512)	01/93→06/96			MAG72DB	ETS71NDB		
LT 40-55 I Box 2.4 D	(291-512)	07/90→05/96		RUN95D		ETS92ND-ETS95D1N		434440ES
LT 40-55 I Box 2.4 TD	(291-512)	06/92→05/96		RUN95D		ETS92ND-ETS95D1N		434440ES
LT 40-55 I Flatbed / Chassis 2.4 i	(293-909)	03/94→06/96			MAG72DB	ETS71NDB		
LT 40-55 I Flatbed / Chassis 2.4 D	(293-909)	08/90→06/96		RUN95D		ETS92ND-ETS95D1N		434440ES
LT 40-55 I Flatbed / Chassis 2.4 TD	(293-909)	08/92→06/96		RUN95D		ETS92ND-ETS95D1N		434440ES
LT 40-55 I Flatbed / Chassis 2.4 TD Syncro	(293-909)	08/91→07/92		RUN72D	MAG74D	ETS74ND	ETS70D1N-ETS74DI	476420ES
LT 28-35 II Bus 2.3	(2DM)	05/96→07/06		RUN62D	MAG62D	ETS62ND	ETS60D3N	438320ES
LT 28-35 II Bus 2.5 SDI	(2DM)	07/96→07/06		RUN95D		ETS92ND-ETS95D1N		434440ES
LT 28-35 II Bus 2.5 TDI	(2DM)	05/01→07/06		RUN95D		ETS92ND-ETS95D1N		434440ES
LT 28-35 II Bus 2.5 TDI	(2DM)	05/99→07/06		RUN95D		ETS92ND-ETS95D1N		434440ES
LT 28-35 II Bus 2.5 TDI	(2DM)	05/01→07/06		RUN95D		ETS92ND-ETS95D1N		434440ES
LT 28-35 II Bus 2.5 TDI	(2DM)	05/96→08/99		RUN95D		ETS92ND-ETS95D1N		434440ES
LT 28-35 II Bus 2.5 TDI	(2DM)	05/99→07/06		RUN95D		ETS92ND-ETS95D1N		434440ES

	Design		START	RUN	MAGIS	ETS	ETS alternative	ES
VOLKSWAGEN								
LT 28-35 II Bus 2.8 TDi	(2DM)	02/97→12/98		RUN72D	MAG74D	ETS74ND	ETS70D1N-ETS74DI	476420ES
LT 28-35 II Bus 2.8 TDi	(2DM)	01/99→01/02		RUN72D	MAG74D	ETS74ND	ETS70D1N-ETS74DI	476420ES
LT 28-35 II Bus 2.8 TDi	(2DM)	05/01→06/06		RUN72D	MAG74D	ETS74ND	ETS70D1N-ETS74DI	476420ES
LT 28-46 II Box 2.3	(2DX0AE)	05/96→07/06		RUN72D	MAG74D	ETS74ND	ETS70D1N-ETS74DI	476420ES
LT 28-46 II Box 2.5 SDI	(2DX0AE)	09/96→07/06		RUN95D		ETS92ND-ETS95D1N		434440ES
LT 28-46 II Box 2.5 TDI	(2DX0AE)	05/01→07/06		RUN95D		ETS92ND-ETS95D1N		434440ES
LT 28-46 II Box 2.5 TDI	(2DX0AE)	05/99→07/06		RUN95D		ETS92ND-ETS95D1N		434440ES
LT 28-46 II Box 2.5 TDI	(2DX0AE)	05/01→07/06		RUN95D		ETS92ND-ETS95D1N		434440ES
LT 28-46 II Box 2.5 TDI	(2DX0AE)	05/96→08/99		RUN95D		ETS92ND-ETS95D1N		434440ES
LT 28-46 II Box 2.5 TDI	(2DX0AE)	05/99→07/06		RUN95D		ETS92ND-ETS95D1N		434440ES
LT 28-46 II Box 2.8 TDI	(2DX0AE)	06/97→12/98		RUN95D		ETS92ND-ETS95D1N		434440ES
LT 28-46 II Box 2.8 TDI	(2DX0AE)	01/99→07/06		RUN95D		ETS92ND-ETS95D1N		434440ES
LT 28-46 II Box 2.8 TDI	(2DX0AE)	04/02→07/06		RUN95D		ETS92ND-ETS95D1N		434440ES
LT 28-46 II Flatbed / Chassis 2.3	(2DX0FE)	06/96→07/06		RUN72D	MAG74D	ETS74ND	ETS70D1N-ETS74DI	476420ES
LT 28-46 II Flatbed / Chassis 2.5 SDI	(2DX0FE)	09/96→07/06		RUN72D	MAG74D	ETS74ND	ETS70D1N-ETS74DI	476420ES
LT 28-46 II Flatbed / Chassis 2.5 TDI	(2DX0FE)	05/01→07/06		RUN95D		ETS92ND-ETS95D1N		434440ES
LT 28-46 II Flatbed / Chassis 2.5 TDI	(2DX0FE)	05/99→07/06		RUN95D		ETS92ND-ETS95D1N		434440ES
LT 28-46 II Flatbed / Chassis 2.5 TDI	(2DX0FE)	05/01→07/06		RUN95D		ETS92ND-ETS95D1N		434440ES
LT 28-46 II Flatbed / Chassis 2.5 TDI	(2DX0FE)	06/96→08/99		RUN95D		ETS92ND-ETS95D1N		434440ES
LT 28-46 II Flatbed / Chassis 2.5 TDI	(2DX0FE)	05/99→07/06		RUN95D		ETS92ND-ETS95D1N		434440ES
LT 28-46 II Flatbed / Chassis 2.8 TDI	(2DX0FE)	06/97→12/98		RUN72D	MAG74D	ETS74ND	ETS70D1N-ETS74DI	476420ES
LT 28-46 II Flatbed / Chassis 2.8 TDI	(2DX0FE)	01/99→07/06		RUN95D		ETS92ND-ETS95D1N		434440ES
LT 28-46 II Flatbed / Chassis 2.8 TDI	(2DX0FE)	04/02→07/06		RUN95D		ETS92ND-ETS95D1N		434440ES
TRANSPORTER IV Bus 1.6	(70XB, 70XC, 7DB, 7DW)	07/92→07/00		RUN62D	MAG62D	ETS62ND	ETS60D3N	438320ES
TRANSPORTER IV Bus 1.8	(70XB, 70XC, 7DB, 7DW)	12/90→07/92			MAG62DB	ETS60NDB-ETS50NDB		ES60NDB
TRANSPORTER IV Bus 2.0	(70XB, 70XC, 7DB, 7DW)	09/90→04/03			MAG62DB	ETS60NDB-ETS50NDB		ES60NDB
TRANSPORTER IV Bus 2.5	(70XB, 70XC, 7DB, 7DW)	11/90→04/03		RUN72D	MAG74D	ETS74ND	ETS70D1N-ETS74DI	476420ES
TRANSPORTER IV Bus 2.5 Syncro	(70XB, 70XC, 7DB, 7DW)	11/92→04/03		RUN72D	MAG74D	ETS74ND	ETS70D1N-ETS74DI	476420ES
TRANSPORTER IV Bus 2.5	(70XB, 70XC, 7DB, 7DW)	08/96→04/03		RUN72D				
TRANSPORTER IV Bus 2.5 Syncro	(70XB, 70XC, 7DB, 7DW)	07/96→04/03		RUN72D	MAG74D	ETS74ND	ETS70D1N-ETS74DI	476420ES
TRANSPORTER IV Bus 2.8 VR 6	(70XB, 70XC, 7DB, 7DW)	11/95→04/00		RUN72D				
TRANSPORTER IV Bus 2.8 V6	(70XB, 70XC, 7DB, 7DW)	04/00→04/03		RUN72D	MAG74D	ETS74ND	ETS70D1N-ETS74DI	476420ES
TRANSPORTER IV Bus 1.9 D	(70XB, 70XC, 7DB, 7DW)	09/90→04/03		RUN72D				
TRANSPORTER IV Bus 1.9 TD	(70XB, 70XC, 7DB, 7DW)	10/92→04/03		RUN72D				
TRANSPORTER IV Bus 2.4 D	(70XB, 70XC, 7DB, 7DW)	08/97→04/03		RUN72D	MAG74D	ETS74ND	ETS70D1N-ETS74DI	476420ES
TRANSPORTER IV Bus 2.4 D	(70XB, 70XC, 7DB, 7DW)	09/90→04/98		RUN72D				
TRANSPORTER IV Bus 2.4 D Syncro	(70XB, 70XC, 7DB, 7DW)	10/92→09/98		RUN72D				
TRANSPORTER IV Bus 2.5 TDI	(70XB, 70XC, 7DB, 7DW)	05/98→04/03			MAG82D	ETS80ND		
TRANSPORTER IV Bus 2.5 TDI	(70XB, 70XC, 7DB, 7DW)	09/95→04/03			MAG82D	ETS80ND		
TRANSPORTER IV Bus 2.5 TDI Syncro	(70XB, 70XC, 7DB, 7DW)	01/96→04/03			MAG82D	ETS80ND		
TRANSPORTER IV Bus 2.5 TDI	(70XB, 70XC, 7DB, 7DW)	05/98→04/03			MAG82D	ETS80ND		
TRANSPORTER IV Box 2.0	(70XA)	07/90→04/03			MAG62DB	ETS60NDB-ETS50NDB		ES60NDB
TRANSPORTER IV Box 2.5	(70XA)	11/90→04/03		RUN72D	MAG74D	ETS74ND	ETS70D1N-ETS74DI	476420ES
TRANSPORTER IV Box 2.5 Syncro	(70XA)	10/92→04/03		RUN72D	MAG74D	ETS74ND	ETS70D1N-ETS74DI	476420ES
TRANSPORTER IV Box 2.5	(70XA)	08/96→04/03		RUN72D	MAG74D	ETS74ND	ETS70D1N-ETS74DI	476420ES
TRANSPORTER IV Box 2.5 Syncro	(70XA)	08/96→04/03		RUN72D	MAG74D	ETS74ND	ETS70D1N-ETS74DI	476420ES
TRANSPORTER IV Box 2.8 VR6	(70XA)	05/96→05/00		RUN72D	MAG74D	ETS74ND	ETS70D1N-ETS74DI	476420ES

	Design		START	RUN	MAGIS	ETS	ETS alternative	ES
VOLKSWAGEN								
TRANSPORTER IV Box 2.8 VR6	(70XA)	06/00→04/03		RUN72D	MAG74D	ETS74ND	ETS70D1N-ETS74DI	476420ES
TRANSPORTER IV Box 1.9 D	(70XA)	07/90→04/03		RUN72D	MAG74D	ETS74ND	ETS70D1N-ETS74DI	476420ES
TRANSPORTER IV Box 1.9 TD	(70XA)	10/92→04/03		RUN72D	MAG74D	ETS74ND	ETS70D1N-ETS74DI	476420ES
TRANSPORTER IV Box 2.4 D	(70XA)	08/97→04/03		RUN72D	MAG74D	ETS74ND	ETS70D1N-ETS74DI	476420ES
TRANSPORTER IV Box 2.4 D	(70XA)	07/90→04/98		RUN72D	MAG74D	ETS74ND	ETS70D1N-ETS74DI	476420ES
TRANSPORTER IV Box 2.4 D Syncro	(70XA)	10/92→09/98		RUN72D	MAG74D	ETS74ND	ETS70D1N-ETS74DI	476420ES
TRANSPORTER IV Box 2.5 TDI	(70XA)	09/95→04/03			MAG82D	ETS80ND		
TRANSPORTER IV Box 2.5 TDI Syncro	(70XA)	09/95→04/03			MAG82D	ETS80ND		
TRANSPORTER IV Box 2.5 TDI	(70XA)	09/00→04/03			MAG82D	ETS80ND		
TRANSPORTER IV Flatbed / Chassis 2.0	(70XD)	07/90→04/03			MAG62DB	ETS60NDB-ETS50NDB		ES60NDB
TRANSPORTER IV Flatbed / Chassis 2.5	(70XD)	11/90→04/03		RUN72D	MAG74D	ETS74ND	ETS70D1N-ETS74DI	476420ES
TRANSPORTER IV Flatbed / Chassis 2.5 Syncro	(70XD)	10/92→04/03		RUN72D	MAG74D	ETS74ND	ETS70D1N-ETS74DI	476420ES
TRANSPORTER IV Flatbed / Chassis 2.5	(70XD)	08/96→04/03		RUN72D	MAG74D	ETS74ND	ETS70D1N-ETS74DI	476420ES
TRANSPORTER IV Flatbed / Chassis 2.5 Syncro	(70XD)	08/96→04/03		RUN72D	MAG74D	ETS74ND	ETS70D1N-ETS74DI	476420ES
TRANSPORTER IV Flatbed / Chassis 2.8 VR6	(70XD)	06/00→04/03		RUN72D	MAG74D	ETS74ND	ETS70D1N-ETS74DI	476420ES
TRANSPORTER IV Flatbed / Chassis 1.9 D	(70XD)	07/90→04/03		RUN72D	MAG74D	ETS74ND	ETS70D1N-ETS74DI	476420ES
TRANSPORTER IV Flatbed / Chassis 1.9 TD	(70XD)	10/92→04/03		RUN72D	MAG74D	ETS74ND	ETS70D1N-ETS74DI	476420ES
TRANSPORTER IV Flatbed / Chassis 2.4 D	(70XD)	08/97→04/03		RUN72D	MAG74D	ETS74ND	ETS70D1N-ETS74DI	476420ES
TRANSPORTER IV Flatbed / Chassis 2.4 D	(70XD)	09/90→04/98		RUN72D	MAG74D	ETS74ND	ETS70D1N-ETS74DI	476420ES
TRANSPORTER IV Flatbed / Chassis 2.4 D Syncro	(70XD)	10/92→09/98		RUN72D	MAG74D	ETS74ND	ETS70D1N-ETS74DI	476420ES
TRANSPORTER IV Flatbed / Chassis 2.5 TDI	(70XD)	05/98→04/03			MAG82D	ETS80ND		
TRANSPORTER IV Flatbed / Chassis 2.5 TDI Syncro	(70XD)	05/98→04/03			MAG82D	ETS80ND		
MULTIVAN V 2.0	(7HM, 7HF)	11/03→		RUN62D	MAG62D	ETS62ND	ETS60D3N	438320ES
MULTIVAN V 3.2 V6	(7HM, 7HF)	02/04→06/04		RUN72D	MAG74D	ETS74ND	ETS70D1N-ETS74DI	476420ES
MULTIVAN V 3.2 4motion	(7HM, 7HF)	11/03→06/06		RUN62D	MAG62D	ETS62ND	ETS60D3N	438320ES
MULTIVAN V 3.2 V6	(7HM, 7HF)	02/04→		RUN72D	MAG74D	ETS74ND	ETS70D1N-ETS74DI	476420ES
MULTIVAN V 3.2 V6 4motion	(7HM, 7HF)	07/04→		RUN72D	MAG74D	ETS74ND	ETS70D1N-ETS74DI	476420ES
MULTIVAN V 1.9 TDI	(7HM, 7HF)	01/06→		RUN72D	MAG74D	ETS74ND	ETS70D1N-ETS74DI	476420ES
MULTIVAN V 1.9 TDI	(7HM, 7HF)	06/06→		RUN72D	MAG74D	ETS74ND	ETS70D1N-ETS74DI	476420ES
MULTIVAN V 1.9 TDI	(7HM, 7HF)	04/03→		RUN72D	MAG74D	ETS74ND	ETS70D1N-ETS74DI	476420ES
MULTIVAN V 2.0 TDI	(7HM, 7HF)	09/09→		RUN72D	MAG74D	ETS74ND	ETS70D1N-ETS74DI	476420ES
MULTIVAN V 2.0 TDI	(7HM, 7HF)	09/09→		RUN72D	MAG74D	ETS74ND	ETS70D1N-ETS74DI	476420ES
MULTIVAN V 2.0 TDI	(7HM, 7HF)	09/09→		RUN72D	MAG74D	ETS74ND	ETS70D1N-ETS74DI	476420ES
MULTIVAN V 2.0 TDI 4motion	(7HM, 7HF)	09/09→		RUN72D	MAG74D	ETS74ND	ETS70D1N-ETS74DI	476420ES
MULTIVAN V 2.0 BiTDI	(7HM, 7HF)	09/09→		RUN72D	MAG74D	ETS74ND	ETS70D1N-ETS74DI	476420ES
MULTIVAN V 2.0 BiTDI 4motion	(7HM, 7HF)	09/09→		RUN72D	MAG74D	ETS74ND	ETS70D1N-ETS74DI	476420ES
MULTIVAN V 2.5 TDI	(7HM, 7HF)	04/03→		RUN72D	MAG74D	ETS74ND	ETS70D1N-ETS74DI	476420ES
MULTIVAN V 2.5 TDI 4motion	(7HM, 7HF)	07/04→		RUN72D	MAG74D	ETS74ND	ETS70D1N-ETS74DI	476420ES
MULTIVAN V 2.5 TDI	(7HM, 7HF)	11/03→		RUN72D	MAG74D	ETS74ND	ETS70D1N-ETS74DI	476420ES
MULTIVAN V 2.5 TDI	(7HM, 7HF)	04/03→		RUN72D	MAG74D	ETS74ND	ETS70D1N-ETS74DI	476420ES

	Design		START	RUN	MAGIS	ETS	ETS alternative	ES
VOLKSWAGEN								
MULTIVAN V 2.5 TDI 4motion	(7HM, 7HF)	07/04→		RUN72D	MAG74D	ETS74ND	ETS70D1N-ETS74DI	476420ES
TRANSPORTER V Bus 2.0	(7HB, 7HJ)	11/03→		RUN72D	MAG74D	ETS74ND	ETS70D1N-ETS74DI	476420ES
TRANSPORTER V Bus 3.2 V6	(7HB, 7HJ)	02/04→06/04		RUN72D	MAG74D	ETS74ND	ETS70D1N-ETS74DI	476420ES
TRANSPORTER V Bus 3.2 4motion	(7HB, 7HJ)	11/03→06/06		RUN72D	MAG74D	ETS74ND	ETS70D1N-ETS74DI	476420ES
TRANSPORTER V Bus 3.2 V6	(7HB, 7HJ)	02/04→		RUN72D	MAG74D	ETS74ND	ETS70D1N-ETS74DI	476420ES
TRANSPORTER V Bus 3.2 4motion	(7HB, 7HJ)	11/03→		RUN72D	MAG74D	ETS74ND	ETS70D1N-ETS74DI	476420ES
TRANSPORTER V Bus 1.9 TDI	(7HB, 7HJ)	01/06→			MAG82D	ETS80ND		
TRANSPORTER V Bus 1.9 TDI	(7HB, 7HJ)	04/03→			MAG82D	ETS80ND		
TRANSPORTER V Bus 1.9 TDI	(7HB, 7HJ)	06/06→			MAG82D	ETS80ND		
TRANSPORTER V Bus 1.9 TDI	(7HB, 7HJ)	04/03→			MAG82D	ETS80ND		
TRANSPORTER V Bus 2.5 TDi	(7HB, 7HJ)	11/03→			MAG82D	ETS80ND		
TRANSPORTER V Bus 2.5 TDI	(7HB, 7HJ)	04/03→		RUN95D		ETS92ND-ETS95D1N		434440ES
TRANSPORTER V Bus 2.5 TDI 4motion	(7HB, 7HJ)	07/04→		RUN95D		ETS92ND-ETS95D1N		434440ES
TRANSPORTER V Bus 2.5 TDI	(7HB, 7HJ)	04/03→		RUN95D		ETS92ND-ETS95D1N		434440ES
TRANSPORTER V Bus 2.5 TDI 4motion	(7HB, 7HJ)	07/04→		RUN95D		ETS92ND-ETS95D1N		434440ES
TRANSPORTER V Box 2.0	(7HA, 7HH)	11/03→		RUN72D	MAG74D	ETS74ND	ETS70D1N-ETS74DI	476420ES
TRANSPORTER V Box 3.2 V6	(7HA, 7HH)	04/03→		RUN72D	MAG74D	ETS74ND	ETS70D1N-ETS74DI	476420ES
TRANSPORTER V Box 3.2 4motion	(7HA, 7HH)	11/03→06/06		RUN72D	MAG74D	ETS74ND	ETS70D1N-ETS74DI	476420ES
TRANSPORTER V Box 3.2 V6	(7HA, 7HH)	02/04→		RUN72D	MAG74D	ETS74ND	ETS70D1N-ETS74DI	476420ES
TRANSPORTER V Box 3.2 4motion	(7HA, 7HH)	11/03→		RUN72D	MAG74D	ETS74ND	ETS70D1N-ETS74DI	476420ES
TRANSPORTER V Box 1.9 TDI	(7HA, 7HH)	04/03→			MAG82D	ETS80ND		
TRANSPORTER V Box 1.9 TDI	(7HA, 7HH)	04/03→			MAG82D	ETS80ND		
TRANSPORTER V Box 2.5 TDI	(7HA, 7HH)	04/03→		RUN95D		ETS92ND-ETS95D1N		434440ES
TRANSPORTER V Box 2.5 TDI 4motion	(7HA, 7HH)	07/04→		RUN95D		ETS92ND-ETS95D1N		434440ES
TRANSPORTER V Box 2.5 TDI	(7HA, 7HH)	04/03→		RUN95D		ETS92ND-ETS95D1N		434440ES
TRANSPORTER V Box 2.5 TDI 4motion	(7HA, 7HH)	07/04→		RUN95D		ETS92ND-ETS95D1N		434440ES
TRANSPORTER V Flatbed / Chassis 2.0	(7JD, 7JE, 7JL, 7JY, 7JZ)	11/03→		RUN72D	MAG74D	ETS74ND	ETS70D1N-ETS74DI	476420ES
TRANSPORTER V Flatbed / Chassis 3.2 V6	(7JD, 7JE, 7JL, 7JY, 7JZ)	02/04→		RUN72D	MAG74D	ETS74ND	ETS70D1N-ETS74DI	476420ES
TRANSPORTER V Flatbed / Chassis 3.2 V6	(7JD, 7JE, 7JL, 7JY, 7JZ)	08/03→		RUN72D	MAG74D	ETS74ND	ETS70D1N-ETS74DI	476420ES
TRANSPORTER V Flatbed / Chassis 1.9 TDI	(7JD, 7JE, 7JL, 7JY, 7JZ)	04/03→			MAG82D	ETS80ND		
TRANSPORTER V Flatbed / Chassis 1.9 TDI	(7JD, 7JE, 7JL, 7JY, 7JZ)	06/06→			MAG82D	ETS80ND		
TRANSPORTER V Flatbed / Chassis 1.9 TDI	(7JD, 7JE, 7JL, 7JY, 7JZ)	04/03→			MAG82D	ETS80ND		
YUGO								
TEMPO 0.9		05/91→12/93				ETS40NS		
ZASTAVA								
1.1 60 EFI (145 A)		08/91→06/95				ETS40NS		
1.3 65 EFI (145 A)		08/91→06/95				ETS40NS		
FLORIDA 1.3 (103 A)		03/91→				ETS40NS		

Applicazione per marca e veicolo
Vehicle application guide
Zuordnung nach Marke und Fahrzeug
Affectations par marques et véhicules
Aplicación por marca y vehículo
Aplicação por marca e veiculo
Εφαρμογη ανα μοντελο
Zastosowanie dla marki i pojazdu
Применение

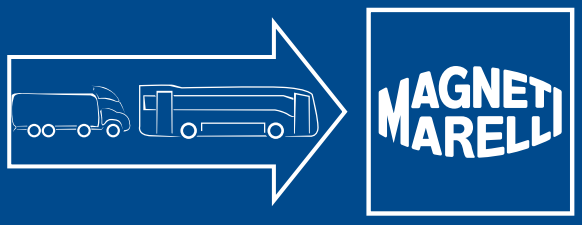

	RUN / ETS / ES	CARGO HD WET	CARGO HD DRY	CARGO SUPER HD
ASTRA				
HD7 64.34, 64.38, 64.45, 66.34		HD155D	HD160D2/CS	
HD7 66.45, 84.38, 84.45, 86.45		HD180D	HD180D2/CS	
HD7/C 42.32		HD155S	HD155S2/CS	
HD7/C 42.36 (42.40) (42.45) (T)		HD155S	HD155S2/CS	
HD7/C 44.32 4x4		HD155S	HD155S2/CS	
HD7/C 44.36 (44.40) (44.45) (T) 4x4		HD155S	HD155S2/CS	
HD7/C 64.36 (64.40) (64.45) (64.50) (T) 6x4		HD155S	HD155S2/CS	
HD7/C 66.36 (66.40) (66.45) (66.50) (T) 6x6		HD155S	HD155S2/CS	
HD7/C 84.36 (84.40) (84.45) (84.50) 8x4		HD155S	HD155S2/CS	
HD7/C 86.40 (86.45) 8x6		HD155S	HD155S2/CS	
HD7/C 88.45 (88.50) 8x8		HD155S	HD155S2/CS	
HD7, HD7-C '00->'05				SHDI180S
SV 44.30		HD155D	HD160D2/CS	
AUTOSAN				
H6 20.01, H6 50, H6 56		HDI110S		SHDI140S
H9 20.41		HDI143S - HDI170S		SHDI180S
H10 10, H10 10.02, H10 11.11, H10 11.21		HDI143S - HDI170S		SHDI180S
A1010M		HDI143S - HDI170S		SHDI180S
AUWÄRTER				
302-8, 302-13 Eurostar		HDI110S		SHDI140S
800 811-42, 813-43		HDI220S	HD220S2/CS	SHDI220S - SHD225S
Neoplan All Types		HDI110S		SHDI140S
AVIA				
A 21, A 31 , A 60, A 75, A 80, A 21 T, A 31 T	ETS95DI - ETS100D2N			
D 60, D 75, D 90, D 100 '01->	ETS95DI - ETS100D2N			
BEDFORD				
CF 230, 250, 280, 350		HD105D	HD105D2/CS	
CF Series D		HD105D	HD105D2/CS	
TJ - series		HD105D	HD105D2/CS	
TL 1000, 1260, 1500, 1600		HD125D	HD125D2/CS	
TL 2400, 2440, 2800, 3200		HD125D	HD125D2/CS	
TM 3650, 3800, 4400		HD125D	HD125D2/CS	
TM 500, 500 HD -		246850HD	HD110D2/CS	
TM 1500, 1700, 1900, 2500 75-86		246850HD	HD110D2/CS	
TM 32x,38x 80-86		246850HD	HD110D2/CS	
Y YNT, YNT Coach 80-		246850HD	HD110D2/CS	
Y YNV, YNV Venture Coach 83-		246850HD	HD110D2/CS	
Others D 7.5 T -	ETS95DI - ETS100D2N			
BOVA				
FUTURA FHD 10, FHD 12, FHD 13, FLD 12, FLD 13 01-				SHDI220S - SHD225S
FUTURA FHD 14 Magnum, FLD 15 Magnum 01-				SHDI220S - SHD225S
LEXIO LD 123, LD 130 05-				SHDI220S - SHD225S

	RUN / ETS / ES	CARGO HD WET	CARGO HD DRY	CARGO SUPER HD
BOVA				
MAGIQ HD 120, HD 122, HD 131 Magnum, HD 139 Magnum 99-		HDI220S	HD220S2/CS	SHDI220S - SHD225S
SYNERGY DD 130, DD 138 04-				SHDI220S - SHD225S
Others FHD 10290, FHD 10340, FHD 10370 -		HDI220S	HD220S2/CS	SHDI220S - SHD225S
Others FHD 12340, FHD 12360, FHD 12380 -		HDI220S	HD220S2/CS	SHDI220S - SHD225S
Others FHM 12290, FHM 12360 -		HDI220S	HD220S2/CS	SHDI220S - SHD225S
Others FLD 12300, FLD 12340 -		HDI220S	HD220S2/CS	SHDI220S - SHD225S
Others FVD 12270 -		HDI220S	HD220S2/CS	SHDI220S - SHD225S
BREMACH				
BRICK 35 (50) 2.8 TD (4X4)	ETS100KID - ETS100ND			
EXTREME 35 (50) 2.8 TD 4X4	ETS100KID - ETS100ND			
JOB 35 (50) 2.8 TD	ETS100KID - ETS100ND			
MOTOCARRI all models	ETS100KID - ETS100ND			
GR 35, GR 45 -	ETS95DI - ETS100D2N			
NB 35, NB 45 -	ETS95DI - ETS100D2N			
BLUESSING				
14-150 (12V), 14-185 -				SHDI180S
14-150 (24V) -		HDI110S		SHDI140S
AK 14-150 -				SHDI180S
BS Bus, Camion -		HDI110S		SHDI140S
Commodore, Konsul, Präfekt -				SHDI180S
Supercargo L 14-185 -				SHDI180S
COMMER / DODGE / KARRIER				
300 Series C2464,C38T, C4084 80-		HDI143S - HDI170S		SHDI180S
300 Series K3820,R3820P 80-		HDI143S - HDI170S		SHDI180S
LD LDV3 -		246850HD	HD110D2/CS	
DAF				
CF 65.180 (220) (250) (290) 4x2		HD125D	HD125D2/CS	
65 CF FA, FAV 98-00		HDI110S		SHDI140S
CF 75 FA, FAG, FAN, FAR, FAS, FAT, FT 01-				SHDI180S
CF 85.340 (85.360)		HD180S	HD180S2/CS	SHDI180S
CF85.380, 380 6x2		HD180S	HD180S2/CS	SHDI180S
CF 85.410 6x2 (FAR 6x2) (FAC 8x2)		HD180S	HD180S2/CS	SHDI180S
CF85.430 (6x2) (6x4) (8x4)		HD180S	HD180S2/CS	SHDI180S
CF 85.380 FAR (6x2)		HD180S	HD180S2/CS	SHDI180S
CF 85.380S (84.43S) (4x2)		HD180S	HD180S2/CS	SHDI180S
CF 85.430 (4x2) (6x2)		HD180S	HD180S2/CS	SHDI180S
CF 85.430 (85.480) FAC (8x2)		HD180S	HD180S2/CS	SHDI180S
CF 85.430 (85.480) FAR (6x2)		HD180S	HD180S2/CS	SHDI180S
CF 85.460 6x2		HD180S	HD180S2/CS	SHDI180S
CF 85.480 (4x2), (6x2)		HD180S	HD180S2/CS	SHDI180S
CF 85.510 8x2 (FAR 6x2)		HD180S	HD180S2/CS	SHDI180S
FA 65.240		HD120S	HD120S2/CS	
FA 75.270 RS (75.300 RS) (6x2)		HD120S	HD120S2/CS	

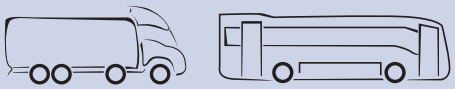	RUN / ETS / ES	CARGO HD WET	CARGO HD DRY	CARGO SUPER HD
DAF				
FA 85.330 (85.360) (85.400)		HD155S	HD155S2/CS	
FA 95.430 (95.500)		HD155S	HD155S2/CS	
FA 95.350 (95.360) (95.380) (95.400)		HD155S	HD155S2/CS	
FA 1100 DT (1300 DT)		HD120S	HD120S2/CS	
FA 2105 DT (2505 DHS)		HD120S	HD120S2/CS	
FA 2305 (2805) (2826) (3605 DKZ)		HD155S	HD155S2/CS	
FAS 3605 DKZ (FAT 3626 DKZ)		HD155S	HD155S2/CS	
FT 3605 DKZ (FTT 3626 DKZ)		HD155S	HD155S2/CS	
LF 45 FA 01-		246850HD	HD110D2/CS	
LF 45.130, E06 (45.150, E08)		HD125D	HD125D2/CS	
LF 45.140 (45.160)		HD125D	HD125D2/CS	
LF 45.170, E10, E12 (45.180, E08, E10) (45.220, E12)		HD125D	HD125D2/CS	
LF 45.2500 E12 (45.280 E15, E18)		HD125D	HD125D2/CS	
LF 55.180 (55.250, E15, E18)		HD125D	HD125D2/CS	
LF 55.220, E12, E13		HD125D	HD125D2/CS	
XF95.430 (4x2) (6x2) (8x2)		HD200S	HD220S2/CS	
XF95.480 (4x2) (6x2) (8x2)		HD200S	HD220S2/CS	
XF95.530 (4x2) (6x2)		HD200S	HD220S2/CS	
XF95.430 (95.480) (95.530) FAN 6x2		HD200S	HD220S2/CS	
XF 95 FA, FAC, FAD, FAR, FAS, FAT, FT, FTG, FTR, FTS, FTT 97-02				SHDI180S
XF 95 FA 02-06				SHDI180S
XF 95 FA, FT, FTG 02-06				SHDI180S
XF 105.410 (105.460) (105.510) FAR 6x2		HD200S	HD220S2/CS	
XF 105 FA 05-				SHDI180S
XF 105 FAS, FAR, FAN 05-				SHDI180S
XF 105 FT 05-				SHDI180S
ERF				
ECL 7.28 02-				SHDI180S
ECM 6.22 02-				SHDI180S
ECM 7.22, 7.28 02-				SHDI180S
ECS 8.25, 8.28 00-		HDI143S - HDI170S		SHDI180S
ECS 11.30 00-		HDI143S - HDI170S		SHDI180S
ECT 10.35, 10.43 05-				SHDI180S
ECT 11.39, 11.42 02-				SHDI180S
ECT 12.36 02-				SHDI180S
ECT 13.46 02-				SHDI180S
ECT 13.48 05-				SHDI180S
ECT 32.35 02-				SHDI180S
ECX 11.30, 11.34, 11.38, 11.41, 11.44 00-		HDI143S - HDI170S		SHDI180S
ECX 14.42, 14.47, 14.52 00-		HDI143S - HDI170S		SHDI180S
FIAT				
80 NC, 90 NC	ETS100KID - ETS100ND			
170, 180, 190		HD132D		
619		HD132D		
619 A, B, C, N1		HD155D	HD160D2/CS	

	RUN / ETS / ES	CARGO HD WET	CARGO HD DRY	CARGO SUPER HD
FIAT				
645 N2, 650, 655		HD120D	HD120D2/CS	
662 A, B, C, D		HD120D	HD120D2/CS	
680 N2, N3, N4		HD155D	HD160D2/CS	
682, T2, T3, T4		HD155D	HD160D2/CS	
683		HD155D	HD160D2/CS	
684 N		HD155D	HD160D2/CS	
684, 691, 697		HD132D		
690 N1, N4, T1, T2		HD155D	HD160D2/CS	
693 N, N1, T1		HD155D	HD160D2/CS	
697 NA, NB, NPA		HD155D	HD160D2/CS	
Others 242 -	ETS95DI - ETS100D2N			
Others 70.10, 79.13 -	ETS74DI			
FORD				
1315, 2417, 2624, 3424, 4028		HD125D	HD125D2/CS	
AO509		HD125D	HD125D2/CS	
CARGO - series (->'80) 1924, 2117		HD125D	HD125D2/CS	
CARGO 1517		HD125D	HD125D2/CS	
TRANSCONTINENTAL - series 4427, 4432, 4435		HD125D	HD125D2/CS	
IKARUS				
280, 297.07, 398.20 -		HDI220S	HD220S2/CS	SHDI220S - SHD225S
405 -		HDI143S - HDI170S		SHDI180S
417 -		HDI220S	HD220S2/CS	SHDI220S - SHD225S
INBUS				
All Types -		HDI220S	HD220S2/CS	SHDI220S - SHD225S
BUS				
S150		HD200S	HD220S2/CS	
U150, U210 FT		HD200S	HD220S2/CS	
Y210		HD200S	HD220S2/CS	
ALL MODELS		HD200S	HD220S2/CS	
IRISBUS				
ACCESS BUS 127 GX 127 L 06-				SHDI220S - SHD225S
ARWAY 12M, 12.8M 06-				SHDI220S - SHD225S
AXER 12m, 12.8m 05-07				SHDI220S - SHD225S
AXER All Other Types 02-				SHDI180S
CITELIS 12 LINE 05-				SHDI220S - SHD225S
CITELIS 18 CNG 05-				SHDI220S - SHD225S
CROSSWAY 10.6m, 12m, 12.8m 06-				SHDI220S - SHD225S
DAILY TOURYS 16 19 06-		246850HD	HD110D2/CS	
DOMINO 2001 03-				SHDI220S - SHD225S
DOMINO HD, HDH 06-				SHDI220S - SHD225S
EVADYS H 12m, H12.8m, HD 12m 03-				SHDI220S - SHD225S
ILIADE All Types -07		HDI143S - HDI170S		SHDI180S

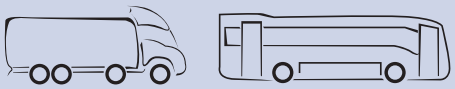	RUN / ETS / ES	CARGO HD WET	CARGO HD DRY	CARGO SUPER HD
IRISBUS				
RECREO 12m, 12.8m 03-07				SHDI180S
Others Ares, Tracer -99		HDI143S - HDI170S		SHDI180S
Others FR1 87-		HDI220S	HD220S2/CS	SHDI220S - SHD225S
IVECO				
DAILY I All Types 78-	ETS95DI - ETS100D2N			
DAILY II All Types 90-	ETS95DI - ETS100D2N			
DAILY III All Types 00-	ETS95DI - ETS100D2N			
DAILY IV 9 62kW / 85ch (8140.63) 06-	ETS95DI - ETS100D2N			
DAILY IV 9 Turbo 66kW / 90ch (8140.43) 06-	ETS95DI - ETS100D2N			
DAILY IV 10 Turbo HPi 2.3L 70kW / 96ch (F1A) 06-		246800.1HD		
DAILY IV 11 Turbo 77kW / 105ch (8140.43C) 06-	ETS95DI - ETS100D2N			
DAILY IV 12 Turbo HPi 2.3L 85kW / 116ch (F1A) 06-		246800.1HD		
DAILY IV 13 Turbo 92kW / 125ch (8140.43) 06-	ETS95DI - ETS100D2N			
DAILY IV 14 Turbo HPi 3.0L 100kW / 136ch (F1CE0481B) 06-		246800.1HD		
DAILY IV 14 Turbo HPT 2.3L 100kW / 136ch (F1A) 06-		246800.1HD		
DAILY IV 15 Turbo 107kW / 146ch (8140.43N) 06-	ETS95DI - ETS100D2N			
DAILY IV 17 Turbo HPT 3.0L 122kW / 166ch (F1CE0481B) 06-		246800.1HD		
DAILY IV 29 9, 35 9, 40 9 06-	ETS95DI - ETS100D2N			
DAILY IV 29 9, 35 9, 40 9 Turbo 06-	ETS95DI - ETS100D2N			
DAILY IV 29 11, 35 11, 40 11, 45 11, 49 11, 50 11 Turbo 06-	ETS95DI - ETS100D2N			
DAILY IV 29 12, 35 12 Turbo HPi 2.3L (F1A) 06-		246800.1HD		
DAILY IV 29 13, 35 13, 40 13, 45 13, 49 13, 50 13, 59 13 Turbo 06-	ETS95DI - ETS100D2N			
DAILY IV 29 14, 35 14 Turbo HPi 2.3L (F1A) 06-		246800.1HD		
DAILY IV 35 14, 50 14, 65 14 Turbo HPi 3.0L (F1CE0481B) 06-		246800.1HD		
DAILY IV 35 15, 40 15, 50 15, 60 15, 65 15 Turbo 06-	ETS95DI - ETS100D2N			
DAILY IV 35 17, 50 17, 65 17 Turbo HPi 3.0L (F1CE0481B) 06-		246800.1HD		
DAILY IV City Camion Chassis 06-		246800.1HD		
DAILY IV City Camion Fourgon 06-	ETS95DI - ETS100D2N			
DAILY IV F1A 06-		246800.1HD		
DAILY V 10 HPi 2.3L 71kW / 96ch (F1AE0481FA) -		246800.1HD		
DAILY V 12 HPi 2.3L 85kw / 116ch (F1AE0481GA) -		246800.1HD		
DAILY V 14 CNG 3.0L 103kW / 140ch (F1CE0481CNG) -		246800.1HD		
DAILY V 14 HPT 2.3L 100kW / 136ch (F1AE0481HA) -		246800.1HD		
DAILY V 15 HPi 3.0L 107kW / 146ch (F1CE0481FA) -		246800.1HD		
DAILY V 18 HPT 3.0L 130kW /176ch (F1CE0481HA) -		246800.1HD		
DAILY V 29 L10, 35C10, 35S10 (F1AE0481FA) -		246800.1HD		
DAILY V 29 L12, 35C12, 35S12 (F1AE0481GA) -		246800.1HD		
DAILY V 29 L14, 35S14 (F1AE0481HA) -		246800.1HD		
DAILY V 35 C14, 50C14, 65C14 CNG (F1CE0481CNG) -		246800.1HD		
DAILY V 35 C15, 50C15 (F1CE0481FA) -		246800.1HD		
DAILY V 35 C18, 40C18, 45C18 (F1CE0481HA) -		246800.1HD		
DAILY V 40 C10 (F1AE0481FA) -		246800.1HD		
DAILY V 40 C12 (F1AE0481GA) -		246800.1HD		
DAILY V 50 C18, 60C18, 65C18 (F1CE0481HA) -		246800.1HD		
DAILY V 60 C15, 65C15 (F1CE0481FA) -		246800.1HD		
EURO CARGO 60 E10, 65 E10 (8040.25B) 91-96	ETS95DI - ETS100D2N			

	RUN / ETS / ES	CARGO HD WET	CARGO HD DRY	CARGO SUPER HD
IVECO				
EURO CARGO 60 E12, 65 E12, 75 E12 (8040.25X) 91-96	ETS95DI - ETS100D2N			
EURO CARGO 60 E14, 65 E14 (8040.45) 91-96	ETS95DI - ETS100D2N			
EURO CARGO 75 E14, 80 E14 (8040.45) 91-00		HDI110S		SHDI140S
EURO CARGO 75 E15, 80 E15, 95 E15, 100 E15 (8060.25R) 91-00		HDI110S		SHDI140S
EURO CARGO 75 E18, 80 E18, 90 E18, 100 E18, 120 E18 Tector 6 -		HDI143S - HDI170S		SHDI180S
EURO CARGO 80 E18, 100 E18, 120 E18, 130 E18 (8060.25V) 91-		HDI110S		SHDI140S
EURO CARGO 80 E21, 90 E21, 100 E21, 120 E21, 180 E21 Tector 6 -		HDI143S - HDI170S		SHDI180S
EURO CARGO 80 E21, 95 E21, 100 E21, 180 E21 (8060.45.4100) 91-		HDI110S		SHDI140S
EURO CARGO 120 E15, 130 E15, 150 E15 (8060.25R) 92-		HDI110S		SHDI140S
EURO CARGO 120 E23, 130 E23 , 150 E23 (8060.45.6090) 92-		HDI110S		SHDI140S
EURO CARGO 120 E24, 130 E24, 140 E24, 150 E24, 180 E24 Tector 6 -		HDI143S - HDI170S		SHDI180S
EURO CARGO 120 E28, 130 E28, 150 E28, 180 E28, 320 E28 Tector 6 -		HDI143S - HDI170S		SHDI180S
EURO CARGO 130 E18, 140 E18, 150 E18 Tector 6 -		HDI143S - HDI170S		SHDI180S
EURO CARGO 135 E18, 150 E18 (8060.25V TC) 93-96		HDI110S		SHDI140S
EURO CARGO 135 E23, 170 E23 (8060.45S TCA) 93-96		HDI110S		SHDI140S
EURO CARGO 150 E27 (8360.46.417 TCA) 92-		HDI110S		SHDI140S
EURO CARGO 170 E18 (8060.25V TC) 94-		HDI110S		SHDI140S
EURO CARGO 180 E18 (8060.25) -		HDI110S		SHDI140S
EURO CARGO 180 E23, 260 E23 T, 280 E23 T (8060.45S) -		HDI110S		SHDI140S
EURO CARGO 180 E27 (8360.45) -		HDI110S		SHDI140S
EURO CARGO 260 E27 T, 320 E27 T (8360.46.417) -		HDI110S		SHDI140S
EURO CARGO Euro 2 -	ETS95DI - ETS100D2N			
EURO CARGO II 60 E14, 65 E14, 75 E14 Tector 4 06-		246850HD	HD110D2/CS	
EURO CARGO II 60 E16, 65 E16, 75 E16 Tector 4 06-		246850HD	HD110D2/CS	
EURO CARGO II 75 E19, 80 E19, 100 E19, 120 E19 Tector 6 06-				SHDI180S
EURO CARGO II 80 E18, 90 E18, 100 E18, 110 E18, 120 E18 Tector 4 06-		246850HD	HD110D2/CS	
EURO CARGO II 80 E18, 90 E18, 100 E18, 120 E18, 130 E18 Tector 6 00-		HDI143S - HDI170S		SHDI180S
EURO CARGO II 80 E21, 90 E21, 100 E21, 110 E21, 120 E21, 130 E21 Tector 6 00-		HDI143S - HDI170S		SHDI180S
EURO CARGO II 80 E22, 90 E22, 100 E22, 110 E22 Tector 6 06-				SHDI180S
EURO CARGO II 90 E25, 120 E25, 130 E25, 150 E25, 180 E25 Tector 6 06-				SHDI180S
EURO CARGO II 100 E17, 110 EL17 Tector 4 Options 00-		246850HD	HD110D2/CS	
EURO CARGO II 120 E22, 130 E22 Tector 6 -		HDI143S - HDI170S		SHDI180S
EURO CARGO II 120 E24, 130 E24, 150 E24, 180 E24 Tector 6 -		HDI143S - HDI170S		SHDI180S
EURO CARGO II 120 E28, 130 E28, 150 E28, 180 E28 Tector 6 -		HDI143S - HDI170S		SHDI180S
EURO CARGO II 120 E30, 130 E30, 150 E30, 180 E30 Tector 6 06-				SHDI180S
EURO CARGO II 130 E28, 180 E28 Tector 6 06-				SHDI180S
EURO CARGO II 150 E21, 180 E21 Tector 6 -		HDI143S - HDI170S		SHDI180S
EURO CARGO II 150 E22 Tector 6 06-				SHDI180S
EURO CARGO II Tector 4 Euro 3 00-		246850HD	HD110D2/CS	
EURO CARGO II Tector 4 Euro 4/5 -		246850HD	HD110D2/CS	
EUROSTAR 180 Cursor 93-02		HDI143S - HDI170S		SHDI180S
EUROSTAR 190, 190 Cursor, 190 Cursor 13 93-02		HDI143S - HDI170S		SHDI180S
EUROSTAR 240, 240 Cursor, 240 Cursor 13 93-02		HDI143S - HDI170S		SHDI180S
EUROSTAR 260, 260 Cursor, 260 Cursor 13 93-02		HDI143S - HDI170S		SHDI180S
EUROSTAR 400, 400 Cursor, 400 Cursor 13 93-02		HDI143S - HDI170S		SHDI180S
EUROSTAR 440, 440 Cursor 93-02		HDI143S - HDI170S		SHDI180S
EUROTECH 175 92-98		HDI143S - HDI170S		SHDI180S

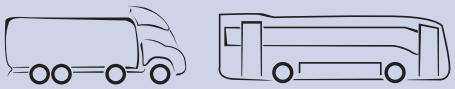	RUN / ETS / ES	CARGO HD WET	CARGO HD DRY	CARGO SUPER HD
IVECO				
EUROTECH 180, MH 180 Cursor 92-98		HDI143S - HDI170S		SHDI180S
EUROTECH 190, MH 190 Cursor, MP 190 Cursor 92-98		HDI143S - HDI170S		SHDI180S
EUROTECH 240, MP 240 Cursor 92-98		HDI143S - HDI170S		SHDI180S
EUROTECH 260, MP 260 Cursor 92-98		HDI143S - HDI170S		SHDI180S
EUROTECH 400, MP 400 Cursor 92-98		HDI143S - HDI170S		SHDI180S
EUROTECH 440, MP 440 Cursor 92-98		HDI143S - HDI170S		SHDI180S
EUROTRAKKER 180 E 93-04		HDI143S - HDI170S		SHDI180S
EUROTRAKKER 190 E, 190 E Cursor 93-04		HDI143S - HDI170S		SHDI180S
EUROTRAKKER 260 E, 260 E Cursor 93-04		HDI143S - HDI170S		SHDI180S
EUROTRAKKER 340 E, 340 E Cursor 93-04		HDI143S - HDI170S		SHDI180S
EUROTRAKKER 380 E, 380 E Cursor 93-04		HDI143S - HDI170S		SHDI180S
EUROTRAKKER 400 E 93-04		HDI143S - HDI170S		SHDI180S
EUROTRAKKER 410 E, 410 E Cursor 93-04		HDI143S - HDI170S		SHDI180S
EUROTRAKKER 440 E, 440 E Cursor 93-04		HDI143S - HDI170S		SHDI180S
EUROTRAKKER 720 E, 720 E Cursor 93-04		HDI143S - HDI170S		SHDI180S
GAMMA S con Optional -		HDI110S		SHDI140S
M M115 17, M135 17 83-85				SHDI180S
M M145 17, M159 17, M175 17 82-86				SHDI180S
M M165 24, M175 24 82-86				SHDI180S
MK MK75 9 83-89	ETS95DI - ETS100D2N			
NC 130, 160 73-84		HDI110S		SHDI140S
NC 159 17, 159 20 76-86		HDI110S		SHDI140S
NC, NR, 110NT,NT13,PC 76-86		HDI110S		SHDI140S
NT 160 76-86		HDI110S		SHDI140S
P/PA 120 13, 1201 16 79-93				SHDI180S
P/PA 150 16, 159 17 79-93				SHDI180S
P/PA 160 17, 160 23, 160 30 84-93				SHDI180S
P/PA 170 23, 170 25, 170 34 89-93				SHDI180S
P/PA 180 24 91-93				SHDI180S
P/PA 190 25, 190 30, 190 32 83-90				SHDI180S
P/PA 260 25, 260 30, 260 32, 260 34 83-90				SHDI180S
P/PA 300 30 87-89				SHDI180S
P/PA 330 30, 330 36 88-92				SHDI180S
P/PA 340 34 89-92				SHDI180S
STRALIS Euro 3 AD/AT 190S27, 260S27 Cursor 8 02-				SHDI180S
STRALIS Euro 3 AD/AT 190S31, 260S31, 440S31 Cursor 8 02-				SHDI180S
STRALIS Euro 3 AD/AT 190S35, 260S35, 440S35 Cursor 8 02-				SHDI180S
STRALIS Euro 3 AD/AT 190S40, 260S40, 440S40 Cursor 10 02-				SHDI220S - SHD225S
STRALIS Euro 3 AD/AT 190S43, 260S43, 440S43 Cursor 10 02-				SHDI220S - SHD225S
STRALIS Euro 3 AD/AT 270 7.8L 6 cyl. (F2BE 0681E) Cursor 8 02-				SHDI140S
STRALIS Euro 3 AD/AT 270 7.8L 6 cyl. Cursor 8 02-				SHDI180S
STRALIS Euro 3 AD/AT 310 7.8L 6 cyl. (F2BE 0681B) Cursor 8 02-				SHDI140S
STRALIS Euro 3 AD/AT 310 7.8L 6 cyl. Cursor 8 02-				SHDI140S
STRALIS Euro 3 AD/AT 350 7.8L 6 cyl. (F2BE 0681A) Cursor 8 02-				SHDI140S
STRALIS Euro 3 AD/AT 350 7.8L 6 cyl. Cursor 8 02-				SHDI140S
STRALIS Euro 3 AD/AT 400 Cursor 10 02-				SHDI180S
STRALIS Euro 3 AD/AT 430 Cursor 10 02-				SHDI180S

	RUN / ETS / ES	CARGO HD WET	CARGO HD DRY	CARGO SUPER HD
IVECO				
STRALIS Euro 3 AD/AT Cursor 8 02-				SHDI140S
STRALIS Euro 3 AD/AT Cursor 10 02-				SHDI220S - SHD225S
STRALIS Euro 3 AS 190S40, 260S40, 440S40 Cursor 10 02-				SHDI220S - SHD225S
STRALIS Euro 3 AS 190S43, 260S43, 440S43 Cursor 10 02-				SHDI220S - SHD225S
STRALIS Euro 3 AS 190S48, 260S48, 440S48 Cursor 13 02-				SHDI220S - SHD225S
STRALIS Euro 3 AS 260S54, 440S54 Cursor 13 02-				SHDI220S - SHD225S
STRALIS Euro 3 AS 400 Cursor 10 02-				SHDI180S
STRALIS Euro 3 AS 430 Cursor 10 02-				SHDI180S
STRALIS Euro 3 AS 480 Cursor 13 02-				SHDI180S
STRALIS Euro 3 AS 540 Cursor 13 02-				SHDI180S
STRALIS Euro 4 & 5 AD/AT 190S33, 260S33, 440S33 Cursor 8 02-				SHDI180S
STRALIS Euro 4 & 5 AD/AT 190S36, 260S36, 440S36 Cursor 8 02-				SHDI180S
STRALIS Euro 4 & 5 AD/AT 190S42, 260S42, 440S42 Cursor 10 02-				SHDI220S - SHD225S
STRALIS Euro 4 & 5 AD/AT 190S45, 260S45, 440S45 Cursor 10 02-				SHDI220S - SHD225S
STRALIS Euro 4 & 5 AD/AT 330 7.8L Cursor 8 02-				SHDI140S
STRALIS Euro 4 & 5 AD/AT 360 7.8L Cursor 8 02-				SHDI140S
STRALIS Euro 4 & 5 AD/AT 420 10.3L Cursor 10 02-				SHDI220S - SHD225S
STRALIS Euro 4 & 5 AD/AT 450 10.3L Cursor 10 02-				SHDI220S - SHD225S
STRALIS Euro 4 & 5 AS 190S42, 260S42, 440S42 Cursor 10 02-				SHDI220S - SHD225S
STRALIS Euro 4 & 5 AS 190S45, 260S45, 440S45 Cursor 10 02-				SHDI220S - SHD225S
STRALIS Euro 4 & 5 AS 190S50, 260S50, 440S50 Cursor 13 02-				SHDI220S - SHD225S
STRALIS Euro 4 & 5 AS 260S56, 440S56 Cursor 13 02-				SHDI220S - SHD225S
STRALIS Euro 4 & 5 AS 420 10.3L Cursor 10 02-				SHDI220S - SHD225S
STRALIS Euro 4 & 5 AS 450 10.3L Cursor 10 02-				SHDI220S - SHD225S
STRALIS Euro 4 & 5 AS 500 12.9L Cursor 13 02-				SHDI220S - SHD225S
STRALIS Euro 4 & 5 AS 560 12.9L Cursor 13 02-				SHDI220S - SHD225S
STRALIS Euro 4 & 5 ES 190S48, 260S48, 440S48 Cursor 13 02-				SHDI220S - SHD225S
STRALIS Euro 4 & 5 ES 190S50, 260S50, 440S50 Cursor 13 02-				SHDI220S - SHD225S
STRALIS Euro 4 & 5 ES 260S54, 440S54 Cursor 13 02-				SHDI220S - SHD225S
STRALIS Euro 4 & 5 ES 260S56, 440S56 Cursor 13 02-				SHDI220S - SHD225S
STRALIS Euro 4 & 5 ES 480 Cursor 13 02-				SHDI220S - SHD225S
STRALIS Euro 4 & 5 ES 500 Cursor 13 02-				SHDI220S - SHD225S
STRALIS Euro 4 & 5 ES 540 Cursor 13 02-				SHDI220S - SHD225S
STRALIS Euro 4 & 5 ES 560 Cursor 13 02-				SHDI220S - SHD225S
TRAKKER 310 Cursor 8 04-				SHDI180S
TRAKKER 330 Cursor 8 04-				SHDI180S
TRAKKER 360 Cursor 8 04-				SHDI180S
TRAKKER 410 Cursor 13 04-				SHDI180S
TRAKKER 450 Cursor 13 04-				SHDI180S
TRAKKER 500 Cursor 13 04-				SHDI180S
TRAKKER Light 260, 340 T 04-				SHDI180S
TRAKKER Off Road 270, 310, 350 7.8L Cursor 8 04-				SHDI180S
TRAKKER Off Road 380, 440, 480 12.9L Cursor 13 04-		HD180S	HD180S2/CS	SHDI180S

	RUN / ETS / ES	CARGO HD WET	CARGO HD DRY	CARGO SUPER HD
JONCKHEERE				
12V -		HDI220S	HD220S2/CS	SHDI220S - SHD225S
24V -		HDI143S - HDI170S		SHDI180S
KAMAZ				
All Types -		HDI143S - HDI170S		SHDI180S
KAROSA				
C 732, C 734, C 736, C 741, C 744 -		HDI143S - HDI170S		SHDI180S
S 706 RTO -		HDI143S - HDI170S		SHDI180S
SL 11 -		HDI143S - HDI170S		SHDI180S
KHD				
M 170 D 10 AL, M 180 R 12 -		HDI110S		SHDI140S
M 200 SH 110 U -		HDI220S	HD220S2/CS	SHDI220S - SHD225S
M 230 L117, M 230 L120, M 230 R120, M 230 TL120, M 230 TR120 -		HDI110S		SHDI140S
KRAZ				
All Types -		HDI143S - HDI170S		SHDI180S
LEYLAND				
CHIEFTAIN, CLYDESDALE		HD125D	HD125D2/CS	
CONSTRUCTOR T45, T100		HD125D	HD125D2/CS	
CRUISER		HD125D	HD125D2/CS	
EV Van (Diesel)		HD105D	HD105D2/CS	
FG, FM (2.2, 2.5L)		HD105D	HD105D2/CS	
FG, FM (3.8, 4.8, 5.1L))		HD125D	HD125D2/CS	
FREIGHTER 12V (1984 ->)		HD105D	HD105D2/CS	
FREIGHTER 24V		HD125D	HD125D2/CS	
MARATHON		HD125D	HD125D2/CS	
MASTIF, SUPER MASTIF		HD125D	HD125D2/CS	
Others 45.120, 50.160, 60.180, 60.210 90-		246800.1HD		
Others FG, FM (2.2 & 2.5L) -		246850HD	HD110D2/CS	
Others Freighter L300 (24V), T203 (24V) -		246800.1HD		
Others Road Runner T211 84-87		246800.1HD		
LIAZ SKODA				
100, 110, 150 -		HDI143S - HDI170S		SHDI180S
230, 250 -		HDI143S - HDI170S		SHDI180S
400 XENA -		HDI143S - HDI170S		SHDI180S
S 706 R -		HDI143S - HDI170S		SHDI180S
S MT, S MTS -		HDI143S - HDI170S		SHDI180S
MAGIRUS DEUTZ				
90 M 5.3	ETS100KID - ETS100ND			
130 M9, M11		HD155S	HD155S2/CS	
232 D		HD155S	HD155S2/CS	
D 310 D, 330 D 71-81		HDI110S		SHDI140S

	RUN / ETS / ES	CARGO HD WET	CARGO HD DRY	CARGO SUPER HD
MAGIRUS DEUTZ				
D 310		HD155S	HD155S2/CS	
M 120 R80	ETS92ND			
M 130 M, 160 M, 192 M, 256M, 290 M 80-82		HDI143S - HDI170S		SHDI180S
Others E113 -		HDI110S		SHDI140S
Others M2000 -				SHDI180S
Others R 80, R81, L81 80-81	ETS95DI - ETS100D2N			
Others R106 -				SHDI180S
Others SH105, SH106, SH110, SH120, SH170 -		HDI220S	HD220S2/CS	SHDI220S - SHD225S
MAN				
F90 19.342		HDI110S - HD155S		SHDI140S
F90 19.343, 19.360 F, 19.360 FT		HD155S	HD155S2/CS	SHDI180S
F90 19.362, 19.372, 19.390 F		HDI110S - HD155S		SHDI140S
F90 19.402		HDI110S - HD155S		SHDI140S
F90 19.422, 19.462, 19.502		HDI110S - HD155S		SHDI140S
F90 33.240 DF, DHA		HD155S	HD155S2/CS	
F90 33.281 DF, 33.292 DF		HD155S	HD155S2/CS	
F90 33.320 DFA		HD155S	HD155S2/CS	
F90 33.322, 33.331 DF		HD155S	HD155S2/CS	SHDI180S
F90 33.365 DF, DFT		HD180S	HD180S2/CS	
F90 33.372, 33.422		HD155S	HD155S2/CS	SHDI180S
F90 40.400 DFA, 41.502		HD180S	HD180S2/CS	
F2000 19.293 FLC, 19.314 FC, FLC		HD155S	HD155S2/CS	SHDI180S
F2000 19.364 FC, FLC, FLT		HD155S	HD155S2/CS	SHDI180S
F2000 19.403, 19.463		HD155S	HD155S2/CS	SHDI180S
F2000 19.414 FAT 4x4		HD155S	HD155S2/CS	SHDI180S
F2000 19.414 (19.464) FC, FLC, FLT		HD155S	HD155S2/CS	SHDI180S
F2000 19.464 FAT 4x4		HD155S	HD155S2/CS	
F2000 19.603 FLT, 19.604 FLT		HD155S	HD155S2/CS	SHDI180S
F2000 26.314 (26.364) (26.414) (26.464) FNLC 6x3		HD155S	HD155S2/CS	
F2000 28.364 (28.414) (28.464) FNALC 6x6-4		HD155S	HD155S2/CS	
F2000 28.364 (28.414) (28.464) FNLC 6x4-4		HD155S	HD155S2/CS	
F2000 35.364 (35.414) (35.464) VFNLC 8x2-6		HD155S	HD155S2/CS	
F2000 41.364 (41.414) (41.464) VFK 8x4		HD180S	HD180S2/CS	
F2000 41.463		HD180S	HD180S2/CS	
L2000 6.113 (6.163) LC 4x2	ETS92ND			
L2000 8.113, 8.145 02-				SHDI140S
L2000 8.143 (8.163) LC 4x2	ETS92ND			
L2000 8.145 (8.185) (8.225) LC 4x2	ETS92ND			
L2000 8.185 02-				SHDI140S
L2000 8.225 02-				SHDI140S
L2000 9.145 02-				SHDI140S
L2000 9.185 02-				SHDI140S
L2000 9.225 02-				SHDI140S
L2000 10.145 02-				SHDI140S
L2000 10.185 02-				SHDI140S
L2000 10.185 (10.225) LC 4x2	ETS92ND			

	RUN / ETS / ES	CARGO HD WET	CARGO HD DRY	CARGO SUPER HD
MAN				
L2000 10.225 02-				SHDI140S
M90 14.192 F	ETS92ND			
M90 14.232, 14.272, 15.168, 15.224		HD120S	HD120S2/CS	SHDI140S
M90 17.232, 18.222, 18.232		HD120S	HD120S2/CS	SHDI140S
M90 18.264, 19.240 F, FA, FP		HD120S	HD120S2/CS	SHDI140S
M90 19.262, 19.321 F, 19.321 FT, 19.322		HD120S	HD120S2/CS	
M90 22.361 FNL, LL		HD155S	HD155S2/CS	
M90 24.362		HD155S	HD155S2/CS	
M90 26.232, 26.422, 26.502		HD155S	HD155S2/CS	
M90 26.403, 26.463		HD155S	HD155S2/CS	
M90 27.372, 28.422, 32.342		HD155S	HD155S2/CS	
M2000 11.163 (11.224) LC	ETS92ND			
M2000 12.185 (12.225) LC 4x2	ETS92ND			
M2000 13.225 (13.255) LC 4x2	ETS92ND			
M2000 13.224 LC, 13.264 MC	ETS92ND			
M2000 13.284 MC	ETS92ND			
M2000 13.285 L	ETS92ND			
M2000 14.225 (255) (285) LLC, MLC 4x2	ETS92ND			
M2000 L 14.225, 14.255 02-				SHDI140S
M2000 L 14.285 02-				SHDI140S
SÜ 283, 292 03-				SHDI180S
TG-A 15.530 BLS 4x2		HD180S	HD180S2/CS	
TG-A 18.310 FLC 4x2		HD180S	HD180S2/CS	SHDI180S
TG-A 18.320		HD180S	HD180S2/CS	SHDI180S
TG-A 18.313 (333) (363) FLC, FLS		HD180S	HD180S2/CS	
TG-A 18.350		HD180S	HD180S2/CS	SHDI180S
TG-A 18.360 FLC (FLT) (4x2)		HD180S	HD180S2/CS	SHDI180S
TG-A 18.360 K		HD180S	HD180S2/CS	SHDI180S
TG-A 18.390		HD180S	HD180S2/CS	SHDI180S
TG-A 18.400		HD180S	HD180S2/CS	SHDI180S
TG-A 18.410 FLC (FLT) (4x2)		HD180S	HD180S2/CS	SHDI180S
TG-A 18.410 FLT, 18.460 FLT		HD180S	HD180S2/CS	SHDI180S
TG-A 18.430 BLS (BLS-TS) (LLS-U)		HD180S	HD180S2/CS	SHDI180S
TG-A 18.440		HD180S	HD180S2/CS	SHDI180S
TG-A 18.460 FLC (FLT) (4x2)		HD180S	HD180S2/CS	SHDI180S
TG-A 18.480 4x4		HD180S	HD180S2/CS	SHDI180S
TG-A 18.510 FLC (FLT) (4x2)		HD180S	HD180S2/CS	SHDI180S
TG-A 18.513 (533) FLC, FLS		HD180S	HD180S2/CS	
TG-A 18.530		HD180S	HD180S2/CS	SHDI180S
TG-A 18.545 FLC, FLS		HD180S	HD180S2/CS	
TG-A 19.360 (19.410) (19.460) (19.480)		HD180S	HD180S2/CS	SHDI180S
TG-A 24.350 --> 24.540		HD180S	HD180S2/CS	SHDI180S
TG-A 26.310 (360) (410) FNLC 6x2		HD180S	HD180S2/CS	SHDI180S
TG-A 26.333 (353) (363) (393) (433) FNLC 6x2		HD180S	HD180S2/CS	
TG-A 26.360 (410) (460) (510) (530) 6x4 (6x6)		HD180S	HD180S2/CS	SHDI180S
TG-A 26.390 LL-0 6x2		HD180S	HD180S2/CS	SHDI180S
TG-A 26.480 BLS 6x2/4		HD180S	HD180S2/CS	SHDI180S

	RUN / ETS / ES	CARGO HD WET	CARGO HD DRY	CARGO SUPER HD
MAN				
TG-A 26.460 (510) FNLC 6x2		HD180S	HD180S2/CS	SHDI180S
TG-A 26.413 (463) (483) FNLC 6x2		HD180S	HD180S2/CS	
TG-A 26.513 (533)) FNLC 6x2		HD180S	HD180S2/CS	
TG-A 28.310 (28.360) (410) (460) (480) (510) (530) 6x2		HD180S	HD180S2/CS	SHDI180S
TG-A 32.310 (350)		HD180S	HD180S2/CS	SHDI180S
TG-A 32.360 (32.390) (410) (460) 8x4		HD180S	HD180S2/CS	SHDI180S
TG-A 32.430 (32.440) (32.480)		HD180S	HD180S2/CS	SHDI180S
TG-A 33.360 FDK (FDS) 6x4		HD180S	HD180S2/CS	SHDI180S
TG-A 33.350 (33.390) (33.400)		HD180S	HD180S2/CS	SHDI180S
TG-A 33.410 FDK (FDS) 6x4		HD180S	HD180S2/CS	SHDI180S
TG-A 33.410 (480) (530) 6x6		HD180S	HD180S2/CS	SHDI180S
TG-A 33.430 (33.440)		HD180S	HD180S2/CS	SHDI180S
TG-A 33.460 FDK (FDS) 6x4		HD180S	HD180S2/CS	SHDI180S
TG-A 33.480 BLS 6x4		HD180S	HD180S2/CS	SHDI180S
TG-A 33.510 FDK (FDS) 6x4		HD180S	HD180S2/CS	SHDI180S
TG-A 35.310 --> 35.530		HD180S	HD180S2/CS	SHDI180S
TG-A 37.310 --> 37.480		HD180S	HD180S2/CS	SHDI180S
TG-A 40.390 --> 40.480		HD180S	HD180S2/CS	SHDI180S
TG-A 41.350 --> 41.400		HD180S	HD180S2/CS	SHDI180S
TG-A 41.410 (460) 8x4		HD180S	HD180S2/CS	SHDI180S
TG-A 41.430 (41.440)		HD180S	HD180S2/CS	SHDI180S
TG-A 41.480 BL 8x4		HD180S	HD180S2/CS	SHDI180S
TGL 7.150, 8.150 05-				SHDI140S
TGL 7.180 05-				SHDI140S
TGL 7.154 (7.184) FC, FRC, FLC, FLRC	ETS92ND			
TGL 8.150 06-				SHDI140S
TGL 8.154 (8.184) FC, FRC, FLC, FLRC	ETS92ND			
TGL 8.180 05-				SHDI140S
TGL 8.210 05-				SHDI140S
TGL 8.214 (8.244) FC,FRC, FLC, FLRC	ETS92ND			
TGL 8.240 05-				SHDI140S
TGL 10.210 05-				SHDI140S
TGL 10.184 (10.214) (10.244) FC, FRC, FLC, FLRC	ETS92ND			
TGL 10.240 05-				SHDI140S
TGL 12.180 05-				SHDI140S
TGL 12.184 (12.214) (12.244) FC, FRC, FLRC	ETS92ND			
TGL 12.210 05-				SHDI140S
TGL 12.240 05-				SHDI140S
TGM 12.240 05-				SHDI140S
TGM 12.244 FLC, FLLC	ETS92ND			
TGM 12.280 05-				SHDI140S
TGM 13.240 FALC, FALRC	ETS92ND			
TGM 13.240 06-				SHDI140S
TGM 18.244 FC, FRC, FLC, FLLRC	ETS92ND			
TGM 13.280 06-				SHDI140S
TGM 15.240 05-				SHDI140S
TGM 15.280 05-				SHDI140S

	RUN / ETS / ES	CARGO HD WET	CARGO HD DRY	CARGO SUPER HD
MAN				
TGM 18.240 05-				SHDI140S
TGM 18.280 05-				SHDI140S
TGM 18.330 05-				SHDI140S
TGM 26.280 06-				SHDI140S
TGM 26.330 06-				SHDI140S
TGS 18.320 (18.360) (18.400) (18.440) (18.480) (18.545 Euro5) (4X2)		HD180S	HD180S2/CS	SHDI180S
TGS 24.320 07-				SHDI180S
TGS 24.360 07-				SHDI180S
TGS 24.400 07-				SHDI180S
TGS 24.440 07-				SHDI180S
TGS 24.480 07-				SHDI180S
TGS 24.540 07-				SHDI180S
TGS 26.320 (268.360) (26.400) (26.440) (26.480) (26.545 Euro5) (6X2)		HD180S	HD180S2/CS	
TGS 35.360 (35.400) (35.440) (35.480) (35.545 Euro5) (8X2)		HD180S	HD180S2/CS	
TGX 18.360 (18.400) (18.440) (18.480) (18.545 Euro5) (18.685 Euro5) (4X2)		HD180S	HD180S2/CS	SHDI180S
TGX 24.360 07-				SHDI180S
TGX 24.400 07-				SHDI180S
TGX 24.440 07-				SHDI180S
TGX 24.480 07-				SHDI180S
TGX 24.540 07-				SHDI180S
TGX 26.320 07-				SHDI180S
TGX 26.360 (26.400) (26.440) (26.480) (26.545 Euro5) (6X2)		HD180S	HD180S2/CS	
TGX 28.400 07-				SHDI180S
TGX 28.440 07-				SHDI180S
TGX 28.480 07-				SHDI180S
TGX 28.540 07-				SHDI180S
TGX 32.360 07-				SHDI180S
TGX 33.400 07-				SHDI180S
TGX 33.440 07-				SHDI180S
TGX 33.480 07-				SHDI180S
TGX 33.540 07-				SHDI180S
TGX 33.680 07-				SHDI180S
TGX 35.360 (35.400) (35.440) (35.480) (35.545 Euro5) (8X2)		HD180S	HD180S2/CS	
MENARINI				
110 L		HD180D	HD180D2/CS	
316.8, 316.13		HD132D		
370.10.27, 370.12.25		HD155D	HD160D2/CS	
370.12.35		HD180D	HD180D2/CS	
418 AC, 419 AL		HD200S	HD220S2/CS	
MERCEDES BENZ				
301		HD180S	HD180S2/CS	
0302 (160CV - 180CV)		HD120S	HD120S2/CS	
0303 (160CV)		HD200S	HD220S2/CS	
0303 (192CV - 256CV)		HD200S	HD220S2/CS	
0305, 0307 (190CV - 250CV)		HD200S	HD220S2/CS	

	RUN / ETS / ES	CARGO HD WET	CARGO HD DRY	CARGO SUPER HD
MERCEDES BENZ				
309	ETS92ND			
317		HD180S	HD180S2/CS	
350		HD200S	HD220S2/CS	
0404, 0405, 0409		HD200S	HD220S2/CS	
INTEGRO		HD200S	HD220S2/CS	
709 RL		HD120S	HD120S2/CS	
710		HD155S	HD155S2/CS	
813 LP		HD155S	HD155S2/CS	
913 LP		HD155S	HD155S2/CS	
1117	ETS100KID - ETS100ND			
1213, 1217, 1219	ETS92ND			
1314, 1317, 1320	ETS100KID - ETS100ND			
1324	ETS92ND			
1413, 1419	ETS92ND			
1425		HD155S	HD155S2/CS	
1517, 1520, 1524	ETS100KID - ETS100ND			
1619	ETS92ND			
1625		HD155S	HD155S2/CS	
1626, 1826, 1827, 1831, 1834		HD155S	HD155S2/CS	
1838, 1844, 1850		HD155S	HD155S2/CS	
1919		HD120S	HD120S2/CS	
1922, 1928, 1932, 1933, 1935		HD120S	HD120S2/CS	
1944, 1948		HD120S	HD120S2/CS	
2038, 2044, 2050		HD155S	HD155S2/CS	
2638, 2644, 2650, 3538, 3544		HD155S	HD155S2/CS	
ACTROS 1831 L 4X2		HD155S	HD155S2/CS	
ACTROS 1832 L (LL) (LS) (K)		HD155S	HD155S2/CS	
ACTROS MP2 1832 03-				SHDI180S
ACTROS 1835 L (LS) (4X2)		HD155S	HD155S2/CS	
ACTROS 1836 L (LL) (LS) (K)		HD155S	HD155S2/CS	
ACTROS MP2 1836 03-				SHDI180S
ACTROS 1840 L (LS) (OffRoad) (4x2)		HD155S	HD155S2/CS	
ACTROS 1841 L (LS) (K)		HD155S	HD155S2/CS	
ACTROS MP2 1841 03-				SHDI180S
ACTROS 1843 L (LS) (OffRoad) (4x2)		HD155S	HD155S2/CS	
ACTROS 1844 L (LS) (K) 4X2		HD155S	HD155S2/CS	
ACTROS MP2 1844 03-				SHDI180S
ACTROS 1846 L (LL) (LS) (K)		HD155S	HD155S2/CS	
ACTROS MP2 1846 03-				SHDI180S
ACTROS 1848 L (LS) (OffRoad) (4x2)		HD155S	HD155S2/CS	
ACTROS MP2 1848 03-				SHDI180S
ACTROS 1850 L (LS)		HD155S	HD155S2/CS	
ACTROS MP2 1850 03-				SHDI180S
ACTROS 1851 L (LS) (K) (AK)		HD155S	HD155S2/CS	
ACTROS 1853 L (LS) (4X2)		HD155S	HD155S2/CS	
ACTROS 1854 L (LS)		HD155S	HD155S2/CS	
ACTROS MP2 1854 03-				SHDI180S

	RUN / ETS / ES	CARGO HD WET	CARGO HD DRY	CARGO SUPER HD
MERCEDES BENZ				
ACTROS 1857 L (LS) (4X2)		HD155S	HD155S2/CS	
ACTROS 1858 L, LS		HD155S	HD155S2/CS	
ACTROS MP2 1858 03-				SHDI180S
ACTROS 1860 L (LS)		HD155S	HD155S2/CS	
ACTROS MP2 1860 05-				SHDI180S
ACTROS 2031, 2035, 2036, 2040, 2043		HD155S	HD155S2/CS	
ACTROS 2032 K, 2041K, 2044 K 4X4		HD155S	HD155S2/CS	
ACTROS MP2 2036 03-				SHDI180S
ACTROS MP2 2032 03-				SHDI180S
ACTROS 2040 AS 4X4		HD155S	HD155S2/CS	
ACTROS MP2 2041 03-				SHDI180S
ACTROS MP2 2044 03-				SHDI180S
ACTROS 2046 (2050) K 4X4		HD155S	HD155S2/CS	
ACTROS MP2 2046 03-				SHDI180S
ACTROS 2048 (2051) AS		HD155S	HD155S2/CS	
ACTROS MP2 2048 03-				SHDI180S
ACTROS MP2 2048 03-				SHDI180S
ACTROS MP2 2050 03-				SHDI180S
ACTROS MP2 2051 03-				SHDI180S
ACTROS 2532, 2536, 2541, 2544, 2546 6X2 (L 6x2)		HD155S	HD155S2/CS	
ACTROS MP2 2532 03-				SHDI180S
ACTROS MP2 2536 03-				SHDI180S
ACTROS MP2 2541 03-				SHDI180S
ACTROS 2543 L 6X2, 2548 L 6X2		HD155S	HD155S2/CS	
ACTROS MP2 2544 03-				SHDI180S
ACTROS MP2 2546 03-				SHDI180S
ACTROS MP2 2548 03-				SHDI180S
ACTROS MP2 2551 03-				SHDI180S
ACTROS 2554, 2558 6X2		HD155S	HD155S2/CS	
ACTROS 2555 L 6X2, 2560 L 6X2		HD155S	HD155S2/CS	
ACTROS MP2 2555 05-				SHDI180S
ACTROS MP2 2632 03-				SHDI180S
ACTROS 2636 K, 2641 K, 2644 K, 2646 K 6X4		HD155S	HD155S2/CS	
ACTROS MP2 2636 03-				SHDI180S
ACTROS MP2 2641 03-				SHDI180S
ACTROS MP2 2644 03-				SHDI180S
ACTROS MP2 2646 03-				SHDI180S
ACTROS MP2 2648 03-				SHDI180S
ACTROS 2650 K 6X2		HD155S	HD155S2/CS	
ACTROS MP2 2650 03-				SHDI180S
ACTROS 2654 K (L) (LS) (S)		HD155S	HD155S2/CS	
ACTROS MP2 2654 03-				SHDI180S
ACTROS 2658 K (L) (LS)		HD155S	HD155S2/CS	
ACTROS MP2 2658 03-				SHDI180S
ACTROS MP2 3231 03-				SHDI180S
ACTROS MP2 3241 03-				SHDI180S
ACTROS 3243 8X4		HD155S	HD155S2/CS	

	RUN / ETS / ES	CARGO HD WET	CARGO HD DRY	CARGO SUPER HD
MERCEDES BENZ				
ACTROS 3241 (3244) (3246 L) (3248 L) (3250) 8X2		HD155S	HD155S2/CS	
ACTROS 3331, 3332, 3335, 3342, 3348		HD155S	HD155S2/CS	
ACTROS MP2 3331 03-				SHDI180S
ACTROS MP2 3332 03-				SHDI180S
ACTROS 3335 K 6X4		HD155S	HD155S2/CS	
ACTROS 3336 (3336 A, S, K) (3341) (3341 S) (3344) (3344 A,S) (3346,S)		HD155S	HD155S2/CS	
ACTROS MP2 3336 03-				SHDI180S
ACTROS 3340 AK (S) 6X6		HD155S	HD155S2/CS	
ACTROS 3340 K 6X4		HD155S	HD155S2/CS	
ACTROS MP2 3341 03-				SHDI180S
ACTROS 3343 K (S) 6X4		HD155S	HD155S2/CS	
ACTROS MP2 3344 03-				SHDI180S
ACTROS MP2 3346 03-				SHDI180S
ACTROS 3348 K (S) 6X4		HD155S	HD155S2/CS	
ACTROS MP2 3348 03-				SHDI180S
ACTROS 3350 (3351) (3351 S) (3354) (3355)		HD155S	HD155S2/CS	
ACTROS MP2 3350 03-				SHDI180S
ACTROS 4140 (4143) (4148) K 8X4		HD155S	HD155S2/CS	
ACTROS MP2 4140 03-				SHDI180S
ACTROS 4140, 4143, 4144 K, 4148		HD155S	HD155S2/CS	
ACTROS MP2 4141 03-				SHDI180S
ACTROS MP2 4144 03-				SHDI180S
ACTROS MP2 4146 03-				SHDI180S
ACTROS MP2 4148 00-				SHDI180S
ACTROS MP2 4151 05-				SHDI180S
ATEGO 712, 714, 715, 717 98-04		HDI110S		SHDI140S
ATEGO 715 (815) (818) 4X2		HD120S	HD120S2/CS	
ATEGO 716 (716 L) (816) (816 L,K)		HD120S	HD120S2/CS	
ATEGO 812, 814, 815, 817, 823 98-04		HDI110S		SHDI140S
ATEGO 822 (822 L,K) (823) (823 L) (824) (824 L,k)		HD120S	HD120S2/CS	
ATEGO 915 (916) (916 L, K) (918) (918 L,K)		HD120S	HD120S2/CS	
ATEGO 917, 923, 925 98-04		HDI110S		SHDI140S
ATEGO 922 (922 L, K) (923) (923 L) (924) (924 L,K)		HD120S	HD120S2/CS	
ATEGO 1016 (L,K)		HD120S	HD120S2/CS	
ATEGO 1017, 1023 98-04		HDI110S		SHDI140S
ATEGO 1022 (1022 L,K) (1023) (1023 A,L) (1024) (1024 A,L,K)		HD120S	HD120S2/CS	
ATEGO 1017, 1217, 1223, 1228	ETS92ND			
ATEGO 1018 (1218) (1223) (1228) (1228 L) 4X2		HD120S	HD120S2/CS	
ATEGO 1215 (1215 L) (1216) (1216 L,K)		HD120S	HD120S2/CS	SHDI140S
ATEGO 1222 (1222 L,K) (1223 L) (1224) (1224 L,K)		HD120S	HD120S2/CS	
ATEGO 1226 (1226 L) (1229) (1229 L)		HD120S	HD120S2/CS	
ATEGO 1317, 1323, 1325, 1328 98-04		HDI110S		SHDI140S
ATEGO 1318 (1318 L,A,AK,K) (1322) (1322 L,K,LS)		HD120S	HD120S2/CS	
ATEGO 1323 (1323 L,LS,A) (1324) (1324 L,LS,A,AK,K)		HD120S	HD120S2/CS	
ATEGO 1326 (1326 L,LS) (1328) (1328 L,LS) (1329) (1329 L,LS)		HD120S	HD120S2/CS	
ATEGO 1517, L		HD120S	HD120S2/CS	
ATEGO 1517, 1523, 1525, 1528 98-04		HDI110S		SHDI140S

	RUN / ETS / ES	CARGO HD WET	CARGO HD DRY	CARGO SUPER HD
MERCEDES BENZ				
ATEGO 1518 L 4X2		HD120S	HD120S2/CS	
ATEGO 1523(1528) L 4X2		HD120S	HD120S2/CS	
ATEGO 1524 (1524 L,A,AK,K) (1526) (1526 L,AK,K)		HD120S	HD120S2/CS	
ATEGO 1529 (1529 L,AK,K)		HD120S	HD120S2/CS	
ATEGO 1823, 1828 98-04		HDI110S		SHDI140S
ATEGO 1828 L 4X2		HD155S	HD155S2/CS	
ATEGO 1833 L (K)		HD120S	HD120S2/CS	
ATEGO 1823, 1828 98-04		HDI110S		SHDI140S
ATEGO 1823, 1828 98-04		HDI110S		SHDI140S
ATEGO 2523, 2528 98-04		HDI110S		SHDI140S
ATEGO 2628 98-04		HDI110S		SHDI140S
ATEGO 2 924 04-				SHDI140S
ATEGO 2 1016 04-				SHDI140S
ATEGO 2 1018 04-				SHDI140S
ATEGO 2 1022 04-				SHDI140S
ATEGO 2 1023 04-				SHDI140S
ATEGO 2 1024 04-				SHDI140S
ATEGO 2 1215 04-				SHDI140S
ATEGO 2 1216 04-				SHDI140S
ATEGO 2 1218 04-				SHDI140S
ATEGO 2 1222 04-				SHDI140S
ATEGO 2 1223 04-				SHDI140S
ATEGO 2 1224 04-				SHDI140S
ATEGO 2 1226 04-				SHDI140S
ATEGO 2 1228 04-				SHDI140S
ATEGO 2 1318 04-				SHDI140S
ATEGO 2 1322 04-				SHDI140S
ATEGO 2 1323 04-				SHDI140S
ATEGO 2 1324 04-				SHDI140S
ATEGO 2 1326 04-				SHDI140S
ATEGO 2 1328 04-				SHDI140S
ATEGO 2 1518 04-				SHDI140S
ATEGO 2 1522 04-				SHDI140S
ATEGO 2 1523 04-				SHDI140S
ATEGO 2 1524 04-				SHDI140S
ATEGO 2 1526 04-				SHDI140S
ATEGO 2 1528 04-				SHDI140S
ATEGO 2 1529 04-				SHDI140S
AXOR 1823, 1835, 1840. 1843 02-04				SHDI180S
AXOR 1824 ,1826 (L,AK,K,LS)		HD180S	HD180S2/CS	
AXOR 1828, 1829 (L,A,AK,K,LS)		HD180S	HD180S2/CS	
AXOR 1833 (L,A,AK,K,LS)		HD180S	HD180S2/CS	
AXOR 1836 LS		HD180S	HD180S2/CS	
AXOR 1840 (1843) LS (Off road)		HD180S	HD180S2/CS	
AXOR 2523, 2528, 2535. 2540, 2543 02-04				SHDI180S
AXOR 2528 L (2533 L) (2536 L) (2540 L) (2543 L) 6X1		HD180S	HD180S2/CS	
AXOR 2623, 2628 02-04				SHDI180S

	RUN / ETS / ES	CARGO HD WET	CARGO HD DRY	CARGO SUPER HD
MERCEDES BENZ				
AXOR 2628 (2329) B (K)		HD180S	HD180S2/CS	
AXOR 2633 (2636) (2640) (2643) B (K)		HD180S	HD180S2/CS	
AXOR 3228 02-04				SHDI180S
AXOR 3236 (3240) (3243) B (K)		HD180S	HD180S2/CS	
AXOR 2 1823 04-				SHDI180S
AXOR 2 1826 04-				SHDI180S
AXOR 2 1828 04-				SHDI180S
AXOR 2 1829 04-				SHDI180S
AXOR 2 1833 04-				SHDI180S
AXOR 2 1836 04-				SHDI180S
AXOR 2 1840 04-				SHDI180S
AXOR 2 1843 04-				SHDI180S
AXOR 2 2528 04-				SHDI180S
AXOR 2 2533 04-				SHDI180S
AXOR 2 2535 04-				SHDI180S
AXOR 2 2540 04-				SHDI180S
AXOR 2 2543 04-				SHDI180S
AXOR 2 2628 04-				SHDI180S
AXOR 2 2633 04-				SHDI180S
AXOR 2 2636 04-				SHDI180S
AXOR 2 2640 04-				SHDI180S
AXOR 2 2643 04-				SHDI180S
AXOR 2 3236 04-				SHDI180S
AXOR 2 3240 04-				SHDI180S
AXOR 2 3243 04-				SHDI180S
CONECTO O 345 C, H, M, UE 01-				SHDI220S - SHD225S
SPRINTER (905) 616 CDI 01-	ETS95DI - ETS100D2N			
TOURINO O 510 03-				SHDI220S - SHD225S
TOURO O 500 01-				SHDI220S - SHD225S
UNIMOG U 300, U 300 L, U 400, U 400L, U 500, U 500 L 00-		HDI110S		SHDI140S
VARIO 512 D, 612 D, 613 D, 614 D, 615 D, 616 D 96-	ETS95DI - ETS100D2N			
VARIO 618 D 06-	ETS95DI - ETS100D2N			
VARIO 810 DT, 812 D, 813 D, 813 DA, 814 D, 814 DA 96-	ETS95DI - ETS100D2N			
VARIO 815 D, 815 DA, 816 D, 816 DA 96-	ETS95DI - ETS100D2N			
VARIO 818 D, 818 DA 06-	ETS95DI - ETS100D2N			
VARIO O 810, O 812, O 814, O 815 96-	ETS95DI - ETS100D2N			
MULTICAR				
FUMO 2.8, 3.0 01-	ETS95DI - ETS100D2N			
M26 EcoLine, ProfiLine, TransLine 03-	ETS95DI - ETS100D2N			
TREMO Carrier, Carrier S 04-	ETS95DI - ETS100D2N			
NEOPLAN				
CENTROLINER N 4407, N 4411, N 4416, N 4420, N 4421 98-				SHDI180S
CITYLINER N 116 90-93				SHDI180S
CITYLINER N 116/3 HC 04-				SHDI180S
CITYLINER N 1216 HD, N 1216 HDC 06-				SHDI180S

	RUN / ETS / ES	CARGO HD WET	CARGO HD DRY	CARGO SUPER HD
NEOPLAN				
EUROLINER N 3316 U, N 3316 K, N 3316 KL, N 3316 UL, N 3318/3 U 98-				SHDI180S
JETLINER N 208, N 213, N 214, N 216 90-93				SHDI180S
SKYLINER N 122, N 122/3 90-93		HDI220S	HD220S2/CS	SHDI220S - SHD225S
SKYLINER N 122/3 L 04-				SHDI220S - SHD225S
SPACELINER N 117, N 117/3 90-93		HDI220S	HD220S2/CS	SHDI220S - SHD225S
STARLINER N 516, N 516/3 96-		HDI220S	HD220S2/CS	SHDI220S - SHD225S
STARLINER N 5218 SHD 05-				SHDI220S - SHD225S
TOURLINER N 2216 SHD, N 2216 SHDL 03-				SHDI220S - SHD225S
TRANSLINER N 93-				SHDI180S
TRENDLINER N 3516 U, N 3516/3 UL 04-				SHDI220S - SHD225S
NISSAN				
ATLEON 120.35 (.50) (.56)	ETS92ND	246850HD	HD110D2/CS	
ATLEON 120.35, 120.56 02-		246850HD	HD110D2/CS	
ATLEON 140.60 (.65) (.70) (.75) (.80)				
ATLEON 140.75 02-		246850HD	HD110D2/CS	
ATLEON 165.75 02-		246850HD	HD110D2/CS	
CABSTAR 95.28 (.32)	ETS92ND			
CABSTAR 110.45	ETS92ND			
CABSTAR 120.35 (.45)	ETS92ND			
PEGASO				
110.45 90-		HDI143S - HDI170S		SHDI180S
360 -		HDI143S - HDI170S		SHDI180S
1223 T, 1226, 1231 R, 1234 T, 1236 -		HDI143S - HDI170S		SHDI180S
2331 -		HDI143S - HDI170S		SHDI180S
2431 K -				SHDI180S
3041, 3560 -				SHDI180S
Comet 1091, Comet 1098 -	ETS95DI - ETS100D2N			
Ekus 100 Turbo -	ETS95DI - ETS100D2N			
J4 800, J4 1100 -	ETS95DI - ETS100D2N			
UV 80 -	ETS95DI - ETS100D2N			
RENAULT TRUCKS				
MASCOTT 110.35 (.50) (.55) (.60)TD	ETS100KID - ETS100ND			
MASCOTT 110.35 (.50) (.55) (60) 2.8 DCI ('04-->)		HD105D	HD105D2/CS	
MASCOT 120.35 3.0 DXI		HD105D	HD105D2/CS	
MASCOT 130.35 3.0 DXI		HD105D	HD105D2/CS	
MASCOTT 130.35 (.55) (.65) TD	ETS100KID - ETS100ND			
MASCOTT 130.35 (.55) (.60) (.65) 2.8 DCI ('04-->)		HD105D	HD105D2/CS	
MASCOTT 150.35 (.55) (.60) (.65) 2.8 DCI ('04-->)		HD105D	HD105D2/CS	
MASCOT 150.35 3.0 DXI		HD105D	HD105D2/CS	
MASCOT 160.35 3.0 DXI		HD105D	HD105D2/CS	
Maxity 110.28 (110.32) (110.35)	RUN72D			
Maxity 130.35 (130.45)	RUN72D			
KERAX DXi11 06-				SHDI180S
KERAX 270.18 4X2 (4X4) DCI		HD180S	HD180S2/CS	

	RUN / ETS / ES	CARGO HD WET	CARGO HD DRY	CARGO SUPER HD
RENAULT TRUCKS				
KERAX 320.18 4X2 DCI		HD180S	HD180S2/CS	
KERAX 320.26 6X4 L (M) DCI		HD180S	HD180S2/CS	
KERAX 370.18 4X2 (4X4) DCI		HD180S	HD180S2/CS	
KERAX 370.18 T DCI		HD180S	HD180S2/CS	
KERAX 370.26 6X4 L (M) DCI		HD180S	HD180S2/CS	
KERAX 370.26 6X4 (6X6) H DCI		HD180S	HD180S2/CS	
KERAX 370.33 6X4 (6X6) H DCI		HD180S	HD180S2/CS	
KERAX 370.33 8X4 L (M) DCI		HD180S	HD180S2/CS	
KERAX 370.40 8X4 H DCI		HD180S	HD180S2/CS	
KERAX 420.18 4X2 (4X4) DCI		HD180S	HD180S2/CS	
KERAX 420.18 T DCI		HD180S	HD180S2/CS	
KERAX 420.26 6X4 L (M) DCI		HD180S	HD180S2/CS	
KERAX 420.26 6X4 (6X6) H DCI		HD180S	HD180S2/CS	
KERAX 420.33 6X4 (6X6) H DCI		HD180S	HD180S2/CS	
KERAX 420.33 8X4 L (M) DCI		HD180S	HD180S2/CS	
KERAX 420.40 8X4 H DCI		HD180S	HD180S2/CS	
AE 380, 385, 420, 500, 520 ('91 --> '96)		HD180S	HD180S2/CS	
AE MAGNUM 390, 420, 430, 470, 560 ('97 --> '00)		HD180S	HD180S2/CS	
MAGNUM DXi12, DXi13 05-				SHDI180S
MAGNUM E.TECH 400, 440, 480 00-05		HD180S	HD180S2/CS	SHDI180S
MAGNUM E-TECH 400 (T) 4X2 (6X2)		HD180S	HD180S2/CS	
MAGNUM E-TECH 440 4X2 (6X2)		HD180S	HD180S2/CS	
MAGNUM E-TECH 480 (T) 4X2 (6X2)		HD180S	HD180S2/CS	
MAGNUM 400.18 (.18T) (.19) 4X2 (6X2)		HD180S	HD180S2/CS	
MAGNUM 440.18 (.18T) (.19) 4X2 (6X2) (6X4)		HD180S	HD180S2/CS	
MAGNUM 440.24 (440.26) (440.26T)		HD180S	HD180S2/CS	
MAGNUM 460.18 (460.18T) (460.24) (460.25) (460.26) (460.26T)		HD180S	HD180S2/CS	
MAGNUM 480.18 (.18T) (.19) 4X2 (6X2) (6X4)		HD180S	HD180S2/CS	
MAGNUM 480.24 (480.26) (480.26T)		HD180S	HD180S2/CS	
MAGNUM 500.18 (500.18T) (500.24) (500.25) (500.26) (500.26T)		HD180S	HD180S2/CS	
MASCOTT DXi Phase 2 04-		246800.1HD		
MASCOTT DXi Phase 3 07-		246800.1HD		
MASTER Phase 2 DCi 82, 90, 100, 115, 136 03-	ETS95DI - ETS100D2N			
MASTER Phase 3 06-	ETS95DI - ETS100D2N			
MAXITY 110 cv, 130 cv 07-		246800.1HD		
MAXITY 150 cv 07-	ETS74DI			
MAXTER 320 26 D, G300 32 D -				SHDI180S
MIDIUM 135, 150, 180, 210, 250 00-		HDI110S		SHDI140S
MIDIUM DXi5/7 06-				SHDI140S
PREMIUM DISTRIBUTION DXi7 06-				SHDI180S
PREMIUM D 240.16 (240.18) '07-->		HD180S	HD180S2/CS	
PREMIUM D 280.16 (280.18) (280.26) '07-->		HD180S	HD180S2/CS	
PREMIUM D 320.16 (320.18) (320.18T) (320.26) '07-->		HD180S	HD180S2/CS	
PREMIUM D 370.18T (370.26) '06-->		HD180S	HD180S2/CS	
PREMIUM D 410.18 (410.18T) (410.26) '06-->		HD180S	HD180S2/CS	
PREMIUM D 450.18 '06-->		HD180S	HD180S2/CS	
PREMIUM ROUTE DXi11 06-				SHDI180S

	RUN / ETS / ES	CARGO HD WET	CARGO HD DRY	CARGO SUPER HD
RENAULT TRUCKS				
PREMIUM R 320.18 (19) DCI 11 (4X2)		HD180S	HD180S2/CS	
PREMIUM R 330.18 4X2 '06-->		HD180S	HD180S2/CS	
PREMIUM R 330.26 6x2*4 '06-->		HD180S	HD180S2/CS	
PREMIUM R 370.18 '06-->		HD180S	HD180S2/CS	
PREMIUM R 370.18 (19) DCI 11 (4X2) (6X2)		HD180S	HD180S2/CS	
PREMIUM R 370.26 DCI 6X2		HD180S	HD180S2/CS	
PREMIUM R 380.18 4X2 '06-->		HD180S	HD180S2/CS	SHDI180S
PREMIUM R 380.26 6x2*4 '06-->		HD180S	HD180S2/CS	SHDI180S
PREMIUM R 410.18 (410.18T) (410.24) (410.25) (410.26) '06-->		HD180S	HD180S2/CS	
PREMIUM R 420.18 (.19) DCI 11 (4X2) (6X2)		HD180S	HD180S2/CS	
PREMIUM R 420.18 T (18T LANDER)		HD180S	HD180S2/CS	
PREMIUM R 420.26 DCI 6X2		HD180S	HD180S2/CS	
PREMIUM R 420.26 6X2*4 '06-->		HD180S	HD180S2/CS	
PREMIUM R 440.18 4X2 30306-->		HD180S	HD180S2/CS	
PREMIUM R 450.18 (450.18T) (450.24) (450.25) (450.26) '06-->		HD180S	HD180S2/CS	
R 310 T, 340, 357, 360, 365, 385		HD155S	HD155S2/CS	
R 390, 420		HD155S	HD155S2/CS	
SCANIA				
ALL MODELS		HD200S	HD220S2/CS	SHDI180S
P 114 CA/340 4x4		HD180S	HD180S2/CS	SHDI180S
P 114 CA/380 4x4 (6x4)		HD180S	HD180S2/CS	SHDI180S
P 114 CB/340 4x4 (6x4) (6x6) (8x4)		HD180S	HD180S2/CS	SHDI180S
P 114 CB/380 4x4 (6x4) (6x6) (8x4)		HD180S	HD180S2/CS	SHDI180S
P 114 D / 340 (6x2)		HD180S	HD180S2/CS	SHDI180S
P 114 G / 340		HD180S	HD180S2/CS	SHDI180S
P 114 L / 340 18 4x2		HD180S	HD180S2/CS	SHDI180S
P 114 LA/340		HD180S	HD180S2/CS	SHDI180S
P 114 LB/340 4x2 (6x2*4)		HD180S	HD180S2/CS	SHDI180S
P 124 CA/420 4x4 (6x4)		HD180S	HD180S2/CS	SHDI180S
P 124 CA/440 6x4		HD180S	HD180S2/CS	SHDI180S
P 124 CA/470 6x4		HD180S	HD180S2/CS	SHDI180S
P 124 CB/420 6x4 (6x6) (8x4)		HD180S	HD180S2/CS	SHDI180S
P 340 DB 4x2 (6x2*4)		HD180S	HD180S2/CS	SHDI180S
P 340 LB 6x2*4 (8x2*6)		HD180S	HD180S2/CS	SHDI180S
P 380 LB 6x2*4 (8x2*6)		HD180S	HD180S2/CS	SHDI180S
P 420 HPI LB 8x2*7		HD180S	HD180S2/CS	SHDI180S
R 114 C/ 340 (380) 4x4 (6x6) (8x4)		HD180S	HD180S2/CS	SHDI180S
R 114 GA/380		HD180S	HD180S2/CS	SHDI180S
R 114 GB/340 6x2 (6x4) (8x2) (8x2*6) (8x4)		HD180S	HD180S2/CS	SHDI180S
R 114 GB/380 6x2 (6x4) (8x2) (8x2*6) (8x4)		HD180S	HD180S2/CS	SHDI180S
R 114 LA/ 340 (380) 6x2		HD180S	HD180S2/CS	SHDI180S
R 114 LB/ 340 (380) 4x2 (6x2) (6x2*4)		HD180S	HD180S2/CS	SHDI180S
R 124 C/ 420 6X4 (6x6) (8x4) (8x8)		HD180S	HD180S2/CS	SHDI180S
R 124 C/ 470 6X4 (8x4)		HD180S	HD180S2/CS	SHDI180S
R 124 CB/ 360 (400) 6X4 (8x4)		HD180S	HD180S2/CS	SHDI180S
R 124 GA/420 (440) (470)		HD180S	HD180S2/CS	SHDI180S

	RUN / ETS / ES	CARGO HD WET	CARGO HD DRY	CARGO SUPER HD
SCANIA				
R 124 GB/ 360 (400) 8x2		HD180S	HD180S2/CS	SHDI180S
R 124 GB/420 (440) (470) HPI 8x2*6		HD180S	HD180S2/CS	SHDI180S
R 124 GB/420 6x2 (6x4) (8x2) (8x2*6) (8x4)		HD180S	HD180S2/CS	SHDI180S
R 124 GB/440 6x2 (6x4) (8x2) (8x2*6) (8x4)		HD180S	HD180S2/CS	SHDI180S
R 124 GB/470 6x2 (6x4) (8x2) (8x2*6) (8x4)		HD180S	HD180S2/CS	SHDI180S
R 124 L 420 (470)		HD180S	HD180S2/CS	SHDI180S
R 124 LA 360 4x2		HD180S	HD180S2/CS	SHDI180S
R 124 LA 400 (460) (530) 6x2		HD180S	HD180S2/CS	SHDI180S
R 124 LA/420 (440) (470) 4x2 (HPI)		HD180S	HD180S2/CS	SHDI180S
R 124 LA/420 (440) (470) 6x2 (HPI)		HD180S	HD180S2/CS	SHDI180S
R 124 LB/360 (400) 4x2 (6x2)		HD180S	HD180S2/CS	SHDI180S
R 124 LB/420(440)(470) 4x2 (HPI)		HD180S	HD180S2/CS	SHDI180S
R 124 LB/420(440)(470) 6x2*4 (HPI)		HD180S	HD180S2/CS	SHDI180S
R 144 GB/460 (530) 8x2 (8x2*4) (8x2*6)		HD180S	HD180S2/CS	SHDI180S
R 144 LA/460 (530) 4x2 (6x2)		HD180S	HD180S2/CS	SHDI180S
R 144 LB/ 460 (530) 4x2 (6x2) (6x2*4)		HD180S	HD180S2/CS	SHDI180S
R 164 C/480 (580) 8x4		HD180S	HD180S2/CS	SHDI180S
R 164 CA/480 (580) 6x4		HD180S	HD180S2/CS	SHDI180S
R 164 GA/480 (580)		HD180S	HD180S2/CS	SHDI180S
R 164 GB/480 6x2 (6x4) (8x2) (8x2*6) (8x4)		HD180S	HD180S2/CS	SHDI180S
R 164 GB/580 6x2 (6x4) (8x2) (8x2*6) (8x4)		HD180S	HD180S2/CS	SHDI180S
R 164 LA/480 4x2		HD180S	HD180S2/CS	SHDI180S
R 164 LB/480 (580) 4x2 (6x2) (6x2*4)		HD180S	HD180S2/CS	SHDI180S
R 420 HPI LB 4X2 (6x2*4)		HD180S	HD180S2/CS	SHDI180S
R 470 HPI LB 4X2 (6x2*4) (8x2*6)		HD180S	HD180S2/CS	SHDI180S
R 340		HD180S	HD180S2/CS	SHDI180S
R 380 LA (4x2) (6x2)		HD180S	HD180S2/CS	SHDI180S
R 380 LB 4x2 (6x2*4) (8x2*6)		HD180S	HD180S2/CS	SHDI180S
R 420 LA (6x2)		HD180S	HD180S2/CS	SHDI180S
R 420 LB 4x2 (6x2*4) (8x2*6)		HD180S	HD180S2/CS	SHDI180S
R 470, R 470 HPI LA 4x2 (6x2)		HD180S	HD180S2/CS	SHDI180S
R 480 LA (6x2)		HD180S	HD180S2/CS	SHDI180S
R 480 LB (6x2*4) (8x2*6)		HD180S	HD180S2/CS	SHDI180S
R 500 LB (6x2*4) (8x2*6)		HD180S	HD180S2/CS	SHDI180S
R 500 (560) (580) (620) LA 4x2 (6x2)		HD180S	HD180S2/CS	SHDI180S
R 500 (560) (580) (620) LB 4x2 (6x2*4) (8x2*6)		HD180S	HD180S2/CS	SHDI180S
R 380, 420, 500, 580		HD180S	HD180S2/CS	SHDI180S
T 114 LA/380		HD180S	HD180S2/CS	SHDI180S
T 124 LA/420 (440) (470) (HPI)		HD180S	HD180S2/CS	SHDI180S
T 164 LA/480 (580)		HD180S	HD180S2/CS	SHDI180S
124 CB / 470 8x4 HZ		HD180S	HD180S2/CS	SHDI180S
SETRA (KÄSSBOHRER)				
S 9, S 10, S 11		HD120S	HD120S2/CS	
S 12, S 14		HD155S	HD155S2/CS	
S 100, 110, 120, 130, 150, 200, 208		HD120S	HD120S2/CS	
S 140, 209, 211, 212, 213, 215, 216		HD155S	HD155S2/CS	

	RUN / ETS / ES	CARGO HD WET	CARGO HD DRY	CARGO SUPER HD
SETRA (KÄSSBOHRER)				
S 300 - series		HD180S	HD180S2/CS	
COMFORTCLASS 400 S 415 GT, S 415 GT HD, S 416 GT HD, S 417 GT HD 03-				SHDI220S - SHD225S
ALL OTHER MODELS		HD200S	HD220S2/CS	SHDI220S - SHD225S
TATRA				
T 138		HD180S	HD180S2/CS	
T 148		HD180S	HD180S2/CS	
T 813, 815		HD180S	HD180S2/CS	
UNIMOG - MERCEDES				
U 90, 140, 600	ETS92ND			
U 300 8,2		HD120S	HD120S2/CS	
U 300 , 400, 500		HD120S	HD120S2/CS	
U 300 L, 400L, 500 L		HD120S	HD120S2/CS	
U 800, 900		HD120S	HD120S2/CS	
U 1000, 1200, 1250, 1300, 1400, 1500		HD120S	HD120S2/CS	
U 1550, 1600, 1700, 2550		HD120S	HD120S2/CS	
VOLVO				
FE 240 18, FE 240 22, FE 240 26, FE 280 18, FE 280 22, FE 280 26 06-				SHDI180S
FE (FEE) (FES) 280-18		HD180S	HD180S2/CS	
FE 280-22		HD180S	HD180S2/CS	
FE 280-26 (FEE 280-26 6x4) (FES 280-26 6x2)		HD180S	HD180S2/CS	
FE (FEE) (FES) 320-18		HD180S	HD180S2/CS	
FE 320 18, FE 320 22, FE 320 26 06-				SHDI180S
FE 320-26 (FEE 320-26 6x4) (FES 320-26 6x2)		HD180S	HD180S2/CS	
FEE (FES) 280 (320)		HD180S	HD180S2/CS	
FH 400, 440, 480, 520 05-				SHDI220S - SHD225S
FH 12-340 (6x2)		HD180S	HD180S2/CS	
FH 12-380 (6x2) (8x2)		HD180S	HD180S2/CS	
FH 12-400 (6x2) (6x4) (8x2)		HD180S	HD180S2/CS	
FH 12-420 (6x2) (8x2)		HD180S	HD180S2/CS	
FH 12-460 (6x2) (6x4) (8x2)		HD180S	HD180S2/CS	
FH 12-500 (6x2) (8x2)		HD180S	HD180S2/CS	
FH 12 FH 12/500 01-				SHDI180S
F 16		HD180S	HD180S2/CS	
F 16 FL		HD180S	HD180S2/CS	
F 6 (6.12)		HD105D	HD105D2/CS	
FH 16 FH 16/470, FH 16/520 93-02				SHDI180S
FH 16 FH 16/540, FH 16/550 03-				SHDI180S
FH 16 FH 16/610 03-				SHDI180S
FL 6		HD105D	HD105D2/CS	
FL 6 L 180 (220, 220-12)		HD105D	HD105D2/CS	
FL 6 E250-17 (E258-18) (H250-15)		HD105D	HD105D2/CS	
FL 7-285, 7-285 6x2		HD155S	HD155S2/CS	
FL 10 T34, 10-320, 10-320 6x2		HD155S	HD155S2/CS	
FL 12-420		HD155S	HD155S2/CS	

	RUN / ETS / ES	CARGO HD WET	CARGO HD DRY	CARGO SUPER HD
VOLVO				
FL 180-7.5 (FL 180-10) (FL 180-12) 4x2		HD105D	HD105D2/CS	
FL 220-12 4x2		HD105D	HD105D2/CS	
FL 250-12 4x2		HD105D	HD105D2/CS	
FL 250-12 (FL 250-15) (FL 250-18) 4x2		HD105D	HD105D2/CS	
FL 250-15 (FL 250-18)		HD105D	HD105D2/CS	
FL 280-12 '06-->		HD180S	HD180S2/CS	
FL 280-15 (FLL 280-15) '06-->		HD180S	HD180S2/CS	
FL 280-18 (FLH 280-18) '06-->		HD180S	HD180S2/CS	
FLL 280-11,5 (280-14) '06-->		HD180S	HD180S2/CS	
FL 611 - 180		HD105D	HD105D2/CS	
FL 612 - 180 (FL 612-210) (FL 612-230)		HD105D	HD105D2/CS	
FL 615-230		HD105D	HD105D2/CS	
FL 618-230		HD105D	HD105D2/CS	
FL II FL 240 12, FL 240 15, FL 240 16, FL 240 18 06-				SHDI180S
FL II FL 280 12, FL 280 15, FL 280 16, FL 280 18 06-				SHDI180S
FLC		HD105D	HD105D2/CS	
FM 7-250 4x2 (6x2)		HD155S	HD155S2/CS	
FM 7-290 4x2 (6x2)		HD155S	HD155S2/CS	
FM 9-260 4x2 (6x2)		HD155S	HD155S2/CS	
FM 9-300 4x2 (6x2)		HD155S	HD155S2/CS	
FM 9-340 4x2 (6x2)		HD180S	HD180S2/CS	
FM 9-380 4x2 (6x2)		HD180S	HD180S2/CS	
FM 10-360 (6x2)		HD180S	HD180S2/CS	
FM 12-340 6x2		HD180S	HD180S2/CS	
FM 12-380 4x2 (6x2) (8x2)		HD180S	HD180S2/CS	
FM 12-380 6x4 (6x6) (8x4)		HD180S	HD180S2/CS	
FM 12-420 (4x2HD) (6x2) (6x4) (6x6) (8x4)		HD180S	HD180S2/CS	
FM 12 460 (6x4) (8x4)		HD180S	HD180S2/CS	
FM-260 (300) 4x2 (6x2) '06-->		HD180S	HD180S2/CS	
FM 300, FM 340, FM 380, FM 400, FM 440, FM 480 05-				SHDI180S
FM-340 (380) 4x2 (6x2) '06-->		HD180S	HD180S2/CS	
FM-400 (440) (480) 4x2 (6x2) (6x4) (8x2) '06-->		HD180S	HD180S2/CS	
FS 7		HD155S	HD155S2/CS	
NH 12-460		HD180S	HD180S2/CS	
N 7		HD155S	HD155S2/CS	
N 10, 12.33		HD155S	HD155S2/CS	
340, 380 (FH / FH12 old series)		HD155S	HD155S2/CS	
420 (FH12 old series)		HD155S	HD155S2/CS	
470, 520 (FH / FH16 old series)		HD155S	HD155S2/CS	

MAGNETI MARELLI

Applicazione per marca e veicolo
Vehicle application guide
Zuordnung nach Marke und Fahrzeug
Affectations par marques et véhicules
Aplicación por marca y vehículo
Aplicação por marca e veiculo
Εφαρμογη ανα μοντελο
Zastosowanie dla marki i pojazdu
Применение

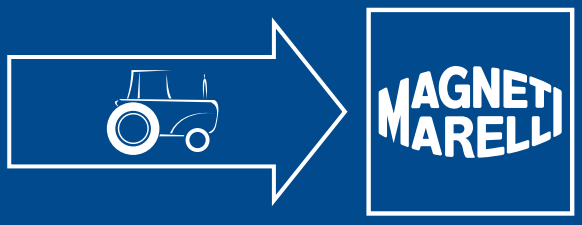

	RUN / ETS / ES	MAGIS	CARGO/WET	CARGO/DRY	CARGO SHD
AEBI					
TP 25, 27, 35, 45 S, 47, 50	ETS92ND-ETS100D2N				
TP 65, 67, 80, 1000	ETS92ND-ETS100D2N				
TT 33 TERRA TRAC			HDI220S	HD220S2/CS	SHDI220S-SHD225S
TT 77	ETS92ND-ETS100D2N				
TT 88, TT 90	ETS92ND-ETS100D2N				
TTH 77	ETS92ND-ETS100D2N				
AGRIA					
4700, 4800, 4800-45, 4500-48, 4900, 5700, 5900 -	ETS50D4N				
6700, 6900, 7200, 7201, 7210, 7211, 7900, 8300 -	ETS50D4N				
8500 -	ETS74DI-ETS74ND	MAG74D			
8900 -	ETS74DI-ETS74ND	MAG74D			
9300 -	ETS50D4N				
9300 E -	ETS60D3N				
9900 E -	ETS74DI-ETS74ND	MAG74D			
AGRIFULL TOSELLI					
35	ETS60D3N-ETS62ND	MAG62D			
50, 55, 60, 65	ETS92ND-ETS100D2N	MAG100D			
68 SC, SUPER	ETS40NS				
70			HD132D		
70 C	ETS92ND				
75	ETS92ND				
80			HD132D		
80 C	ETS92ND				
80 TORNADO			HD120D	HD120D2/CS	
80.9, DT	ETS92ND				
90 DT, 90 S, 100, 110 DT			HD132D		
100-400 Series 230, 230 C, 235, 235 C, 235 DT, 235 LL, 235 Vigneto, 255 -	ETS100D2N	MAG100D			
100-400 Series 345, 345 C, 345 DT, 345 Vigneto, 350 C, 350-9 DT, 355, 355 C, 376 -	ETS100D2N	MAG100D			
110 S, 140			HD132D		
230 C	ETS100ND				
235 C, DT, LL, VIGNETO	ETS100ND				
345 C, DT, VIGNETO	ETS100ND				
350.9 DT	ETS92ND				
355 C, 376	ETS100ND				
475, 485			HD155D	HD160D2/CS	
1000 DT			HD132D		
C80.66 L, N			HD132D		
DERBY 60	ETS100ND				
GRISO	ETS92ND				
JOLLY 345	ETS100ND		HDI143S		
PINTO 6115			HD155D	HD160D2/CS	
PONY 230, 235	ES70540S				
RODEO 90, 95			HD120D	HD120D2/CS	

	RUN / ETS / ES	MAGIS	CARGO/WET	CARGO/DRY	CARGO SHD
AGRIFULL TOSELLI					
RODEO 95 TURBO			HD155D	HD160D2/CS	
SPRINT 345	ETS100D2N	MAG100D			
SPRINT 350	ETS100ND-ETS100D2N				
AGROSTROJ					
SP 8-50 -			HDI143S		SHDI180S
TZ 4-K14 -	ETS60D3N				
AHLMANN					
AS/AZ AS 45, AS 65, AZ 9, AZ 10 -	ETS100D2N	MAG100D			
zzOTHERS Jogger 300 -	ETS74DI-ETS74ND	MAG74D			
EC EC 280 -			HDI110S		SHDI140S
EC EC 340, EC 390, EC 420, EC 450, EC 620, EC 650 -			HDI143S		SHDI180S
AKTIV					
580, 680, 690 Combine -	ETS100D2N	MAG100D			
S 1110, S 1130 -			246850HD	HD110D2/CS	
AL-KO					
80, Nordstar 30 RE, 30 REL, 34 REL -	ETS50D4N				
Parkmeister 66 E, Tosaerba 66 E, 80 E, Trag 1082 -	ETS50D4N				
T 134-II, T 204 -	ETS100D2N	MAG100D			
ALLEN					
T 134-II, T 204 -	ETS100D2N	MAG100D			
ALLIS CHARMERS					
AC 7580, 8580				HD105S2/CS	
40-700 Series 545, 545 B -			246850HD	HD110D2/CS	
40-700 Series 745 B, 745 H -			HDI220S	HD220S2/CS	SHDI220S-SHD225S
B/BTL BTL 10, BTL 12, BTL 14, BTL 16 -			HD105D-246850HD	HD105D2/CS	
B/BTL BTL 16, BTL 20 -			HDI143S		SHDI180S
B/BTL BTL 30 -			HDI220S	HD220S2/CS	SHDI220S-SHD225S
D/ED ED 40 -			HD105D-246850HD	HD105D2/CS	
H/HD HD 6, HD 6 G, HD 7 B, HD 7 G, HD 12 -			HDI110S		SHDI140S
H/HD HD 15, HD 16, HD 16 DP, HD 21 -			HDI220S	HD220S2/CS	SHDI220S-SHD225S
TL 12, 16, 645			HD125D	HD125D2/CS	
TK/TL TL 30 -			HDI220S	HD220S2/CS	SHDI220S-SHD225S
5000			HD125D	HD125D2/CS	
AMA					
AMV 1 HD -			246850HD	HD110D2/CS	
AMV 1 L Borrvagn -	ETS60D3N				
BL BL 20 -			HDI220S	HD220S2/CS	SHDI220S-SHD225S
C/CP C 140 S, C 185 S, C 250 S -			HDI143S		SHDI180S
C/CP CP 140 S, CP 185 S, CP 250 S -			HDI143S		SHDI180S
FM FM 10 A2 -			HDI143S		SHDI180S

	RUN / ETS / ES	MAGIS	CARGO/WET	CARGO/DRY	CARGO SHD
AMA					
SC SC 30 DS, SC 40 DS -	ETS74DI-ETS74ND	MAG74D			
SFG SFG 50 -			246850HD	HD110D2/CS	
SM SM 14, SM 17, SM 18, SM 20, SM 21, SM 23, SM 27, SM 28, SM 30, SM 40 -			HDI220S	HD220S2/CS	SHDI220S-SHD225S
ST/STL ST 132, ST 132 H, ST 151, ST 152, ST 180, ST 180 H, ST 201, ST 202 -			HDI220S	HD220S2/CS	SHDI220S-SHD225S
ST/STL STL 203, STL 204 -			HDI220S	HD220S2/CS	SHDI220S-SHD225S
VM VM 28 AL -			HDI220S	HD220S2/CS	SHDI220S-SHD225S
AMEISE					
EJB EJB 15 B, EJB 16, EJB 45 B -			HDI143S		SHDI180S
PROPEMAT KS 55, KS 57, KS 58, KS 59 -			HDI143S		SHDI180S
PROPEMAT PSE -	ETS60D3N				
zzOTHERS Compressor, EJ 12 B, EJC, EJE, EJZ -			HDI143S		SHDI180S
zzOTHERS Junior -			HDI110S		SHDI140S
AMOG TOMISANI					
T 40 C, T 40 DT, TR 25 R, TR 30, TR 32 -	ETS100D2N	MAG100D			
Tigre -	ETS100D2N	MAG100D			
ARMAL					
MV 135, MV 185, MV 250 -			HDI110S		SHDI140S
ARNOUX					
W 33, W 40 P, W 45 -	ETS74DI-ETS74ND	MAG74D			
ATLAS					
1000 Series 1004 -	ETS74DI-ETS74ND	MAG74D			
1000 Series 1102 D, 1104 -	ETS74DI-ETS74ND	MAG74D			
1000 Series 1122 -			HDI143S		SHDI180S
1000 Series 1122 D, 1122 DM -	ETS74DI-ETS74ND	MAG74D			
1000 Series 1202 -			HDI143S		SHDI180S
1000 Series 1202 D, 1204, 1301 E, 1302 E -	ETS74DI-ETS74ND	MAG74D			
1000 Series 1302, 1302 B, 1302 C, 1302 D -			HDI143S		SHDI180S
1000 Series 1602 E -	ETS74DI-ETS74ND	MAG74D			
1000 Series 1602, 1602 B, 1602 D -			HDI143S		SHDI180S
1000 Series 1622, 1622 D, 1702 -			HDI143S		SHDI180S
1000 Series 1702 D, 1702 DHD -	ETS74DI-ETS74ND	MAG74D			
1000 Series 1704, 1804, 1902 -			HDI143S		SHDI180S
ATLAS COPCO					
PNS 1200			HDI220S	HD220S2/CS	SHDI220S-SHD225S
XA 60, 80			HD125D	HD125D2/CS	
XAS/XASS XAS 66 -	ETS74DI-ETS74ND	MAG74D			
XAS/XASS XAS 66 DDG -			246850HD	HD110D2/CS	
XA 120, 160			HD105D	HD105D2/CS	
XAS 60, 80			HD125D	HD125D2/CS	

	RUN / ETS / ES	MAGIS	CARGO/WET	CARGO/DRY	CARGO SHD
ATLAS COPCO					
XAS 120, 160			HD105D	HD105D2/CS	
XASS 60, 80			HD125D	HD125D2/CS	
XASS 120, 160			HD105D	HD105D2/CS	
AVELING BARFORD					
GB/GC/GD/GF/GR GB (Perkins engine) -			HDI110S		SHDI140S
GB/GC/GD/GF/GR GC (Ford engine) -			HDI143S		SHDI180S
GB/GC/GD/GF/GR GC 200, GC 230, Other GC (Ruston engine) -			HDI110S		SHDI140S
GB/GC/GD/GF/GR GC 4 (Ford/Lister engine) -			HDI143S		SHDI180S
GB/GC/GD/GF/GR GC 4 (Lister engine 24V) -			HDI110S		SHDI140S
GB/GC/GD/GF/GR GD 4, Other GD (Ford/Perkins engine) -			HDI143S		SHDI180S
GB/GC/GD/GF/GR GF 200, GF 230 -			HDI110S		SHDI140S
GB/GC/GD/GF/GR GF Other types (Ford/Perkins engine) -			HDI143S		SHDI180S
GB/GC/GD/GF/GR GR 200, GR 230 -			HDI110S		SHDI140S
LG LG (Perkins engine), LG 1 (Dorman 3LB engine) -			HDI220S	HD220S2/CS	SHDI220S-SHD225S
MG/MT MG 1, MG 2, MG 3, MG4, MG 5 (older types) -			HDI110S		SHDI140S
MG/MT MG Other types -	ETS100D2N	MAG100D			
PM/PR/PTR PM 20 (Perkins engine), PR 15 (Perkins engine), PTR (Perkins engine) -			HDI110S		SHDI140S
RD RD 35 (Cummins engine) -			HDI220S	HD220S2/CS	SHDI220S-SHD225S
SA/SG/SL/SR/SW SA (Dorman engine) -			HDI110S		SHDI140S
SA/SG/SL/SR/SW SA (Perkins engine) -			HDI220S	HD220S2/CS	SHDI220S-SHD225S
SA/SG/SL/SR/SW SR, SR 1 (Dorman/Leyland engine) -			HDI110S		SHDI140S
SA/SG/SL/SR/SW SW 4, SW 4 Centaur 50 (GM engine), SW 5 -			HDI110S		SHDI140S
TG/TP/TR/TS TP (Perkins engine), TR (Ford diesel engine) -			HDI110S		SHDI140S
TG/TP/TR/TS TS 185, TS 200, TS 230 (Ford/Leyland/Perkins engine) -			HDI110S		SHDI140S
VP/VR VP/VPA (Perkins engine) -			HDI110S		SHDI140S
VP/VR VR 3, VR 4 -			HDI110S		SHDI140S
AVTO BELARUS					
300-900 Series 320, 335 Commodore, 335-4C, 500, 507, 560, 572, 575 -	ETS100D2N	MAG100D			
300-900 Series 611, 682, 800, 820, 920, 952 -	ETS100D2N	MAG100D			
1000 Series 1000, 1020, 1025, 1221 -	ETS100D2N	MAG100D			
1000 Series 1500, 1500 DON -			HDI220S	HD220S2/CS	SHDI220S-SHD225S
BX BX 90, BX 92, BX 100, BX 102 -	ETS100D2N	MAG100D			
D/DT/DZ D 45 -	ETS74DI-ETS74ND	MAG74D			
D/DT/DZ D 254 -			HDI110S		SHDI140S
D/DT/DZ D 416, D 527, D 532 -	ETS74DI-ETS74ND	MAG74D			
D/DT/DZ DT 20 -	ETS100D2N	MAG100D			
D/DT/DZ DZ 133, DZ 525, DZ 820 -			246850HD	HD110D2/CS	
F F 43-8, F 43-8 S -	ETS74DI-ETS74ND	MAG74D			

	RUN / ETS / ES	MAGIS	CARGO/WET	CARGO/DRY	CARGO SHD
AVTO BELARUS					
MTS MTS 82 -	ETS74DI-ETS74ND	MAG74D			
MTZ MTZ 800, MTZ 820 -			246850HD	HD110D2/CS	
MTZ MTZ 920, MTZ 923, MTZ 952, MTZ 1020, MTZ 1022, MTZ 1221 Over -	ETS74DI-ETS74ND	MAG74D			
T T 40, T 42, T 42 Tractor, T 54 -	ETS100D2N	MAG100D			
T T 600, T 604 -	ETS74DI-ETS74ND	MAG74D			
TITAN 1100, 1300, 1310 -	ETS74DI-ETS74ND	MAG74D			
BARBER GREENE					
SA/SB SB 140 -			HDI220S	HD220S2/CS	SHDI220S-SHD225S
TA TA 30, TA 50 -			HDI143S		SHDI180S
OTHERS 44 C (Meadows engine) -			HDI110S		SHDI140S
BAUTZ					
AL/AS/AW AL 122, AL 350 -	ETS74DI-ETS74ND	MAG74D			
AL/AS/AW AW 120 U, AW 350 -	ETS100D2N	MAG100D			
T T 600, T 600 S, T 600 V, T 600-30, T 600-40 -	ETS100D2N	MAG100D			
TITAN 1100, 1110, 1300, 1310, 2000 -	ETS100D2N	MAG100D			
BCS					
701 -	ETS60D3N				
MOTOFALCIATRICI 268, 622	ETS40NS				
TRATTORI 8443, 8444	ETS100ND				
VALIANT 400 AR, RS (Mono) (Rev)	ES70540S				
VALIANT 500 AR, RS (Mono) (Rev)	ES70540S				
VALIANT 500 AR, RS (Mono) (Rev)	ES70540S				
VANGUARD 550 AR, RS (Mono) (Rev)	ETS100ND				
VANGUARD 750 AR, FR, MT, RS (Mono) (Rev)	ETS100ND				
VANGUARD 800 AR, FR, MT, RS (Mono) (Rev)	ETS100ND				
VICTOR 300 AR, RS (Mono)	ES45330D				
VICTOR 400 AR, RS (Mono)	ES45330D				
VITHAR 800 (900) AR Mono	ETS100ND				
VITHAR 9800 AR Mono	ETS100ND				
VIVID 300 (400) DT	ES45330D				
BELARUS					
410, 411, 415, 416, 425, 430, 447, 450, 451,					
MTZ 1022	ETS74ND-ETS74DI				
MTZ 920 Over	ETS74ND-ETS74DI				
MTZ 923 Over	ETS74ND-ETS74DI				
MTZ 952 Over	ETS74ND-ETS74DI				
MTZ 1020 Over	ETS74ND-ETS74DI				
MTZ 1221 Over	ETS74ND-ETS74DI				
T 150, 250	ES70540S				

	RUN / ETS / ES	MAGIS	CARGO/WET	CARGO/DRY	CARGO SHD
BENATI					
3-06, 3-12 -	ETS74DI-ETS74ND	MAG74D			
60, 160 LCB, 2000 -	ETS74DI-ETS74ND	MAG74D			
BEN 12, BEN 16 -			246850HD	HD110D2/CS	
BEN 40163 -			246800.1HD		
BENFRA					
360 -	ETS60D3N				
BERTOLINI					
300-500 Series 421 -	ETS50D4N				
300-500 Series 424, 432 -	ETS60D3N				
300-500 Series 450 3C, 510-I, 534 -	ETS60D3N				
BG TRUCK					
All types -	ETS100D2N	MAG100D			
BIMA					
285, 300, 325, 360 -			HDI143S		SHDI180S
BISON					
2040, 2043, 2050, 2060, 5056, 5058 -			HDI220S	HD220S2/CS	SHDI220S-SHD225S
Super Bison -			HDI143S		SHDI180S
BLAW KNOX					
PF 20 -			246850HD	HD110D2/CS	
BOBARD					
400-700 Series 410, 500, 570, 570 XD, 580, 580 TR -	ETS100D2N	MAG100D			
400-700 Series 620, 621, 625, 625 A, 625 Turbo, 630 Turbo, 730, 730 B -	ETS100D2N	MAG100D			
A A 35 -	ETS100D2N	MAG100D			
B B 30, B 45, B54 -	ETS100D2N	MAG100D			
C/CC/CR C 55-60, C 70-77 -	ETS100D2N	MAG100D			
C/CC/CR CC 54-40, CC 55-60, CC 70-77, CC 70, CC 90-100, CC 90-100 XD, CC 590 TR -	ETS100D2N	MAG100D			
C/CC/CR CC-III 50-60, CC-III 55, CC-III 70-77, CC-III 90-100 -	ETS100D2N	MAG100D			
C/CC/CR CR 3000, CR 3000 Ceres -	ETS100D2N	MAG100D			
FMC G 553, G 555 K -	ETS100D2N	MAG100D			
G/GSS G 55 -	ETS100D2N	MAG100D			
H H 35, H 55 -	ETS100D2N	MAG100D			
M/MT M 30 M 40, M 45, M 55, M 60, M 60 E, M 60 L, M 60-3 -	ETS100D2N	MAG100D			
M/MT MT 95, Other MT -	ETS74DI-ETS74ND	MAG74D			
P/PX P 30 -	ETS74DI-ETS74ND	MAG74D			
P/PX PX 55, PX 60, PX 70 -	ETS100D2N	MAG100D			

	RUN / ETS / ES	MAGIS	CARGO/WET	CARGO/DRY	CARGO SHD
BOBARD					
TM TM 55 -	ETS100D2N	MAG100D			
zzOTHERS 3000, Bob K 53 B, Poly-Bob -	ETS74DI-ETS74ND	MAG74D			
BOBCAT					
300-900 Series 611 -			246850HD	HD110D2/CS	
300-900 Series 721 -			246850HD	HD110D2/CS	
300-900 Series 743 -			246850HD	HD110D2/CS	
300-900 Series 753 -			246850HD	HD110D2/CS	
300-900 Series 825 -			246850HD	HD110D2/CS	
300-900 Series 853 H -			246850HD	HD110D2/CS	
300-900 Series 864, 864 H -			246800.1HD		
300-900 Series 980 -			246850HD	HD110D2/CS	
X X 223, X 231, X 320 -	ETS74DI-ETS74ND	MAG74D			
X X 325 -	ETS50D4N				
X X 331 -	ETS74DI-ETS74ND	MAG74D			
X X 335 -	ETS100D2N	MAG100D			
BOKI					
2050 -	ETS60D3N				
4550 -	ETS100D2N	MAG100D			
BOLENS					
All USA models -	ETS50D4N				
GT 16, GT 1900 H, GT Tractor -	ETS50D4N				
BOMAG					
BT BT 60-4, BT 65-4 Compactor -	ETS60D3N				
BT BT 80 D Compactor -	ETS74DI-ETS74ND	MAG74D			
BV BV 101 AB -	ETS100D2N	MAG100D			
BW BW 6 -			HDI143S		SHDI180S
BW BW 90, BW 90 ADL, BW 100 AD, BW 101, BW 101 AB, BW 120 AD, BW 120 ADL -	ETS100D2N	MAG100D			
BW BW 141 AD, BW 141-66 AD -			HDI143S		SHDI180S
BW BW 160 -			HDI110S		SHDI140S
BW BW 177 D-3 -			246850HD	HD110D2/CS	
BW BW 2130 -			HDI143S		SHDI180S
K K 351, K 451, K 3008 -			HDI143S		SHDI180S
BOURGOIN					
CX CX 400 M -			HDI110S		SHDI140S
DP DP 5, DP 6 -			HDI110S		SHDI140S
DP DP 7 -			HDI143S		SHDI180S
GM/GR/GX/GY GM 3, GM 4 -			HDI143S		SHDI180S
GM/GR/GX/GY GX 300, GX 400, GX 406, GX Axial -			HDI110S		SHDI140S
GM/GR/GX/GY GY 103, GY 104, GY 134 -			HDI143S		SHDI180S
JC JC 410 -			HDI110S		SHDI140S
MD/SMD SMD 15 -			HDI110S		SHDI140S

	RUN / ETS / ES	MAGIS	CARGO/WET	CARGO/DRY	CARGO SHD
BOURGOIN					
TZ TZ 3, TZ 4 -			HDI143S		SHDI180S
TZ TZ 7 -			HDI143S		SHDI180S
zzOTHERS Axial SP, Other Axial -			HDI143S		SHDI180S
zzOTHERS Other Doux, MTH -			HDI110S		SHDI140S
BOUYER					
zzOTHERS Axial SP, Other Axial -			HDI143S		SHDI180S
zzOTHERS Other Doux, MTH -			HDI110S		SHDI140S
900 -			HDI110S		SHDI140S
Elan -	ETS74DI-ETS74ND	MAG74D			
BRAUD					
105, 108, 258, 405, 502, 503, 504, 505, 600, 602, 603, 604, 605, 650 -			HDI143S		SHDI180S
700, 701, 750, 800, 801, 1014, 1020, 1114 -			HDI143S		SHDI180S
1024 -	ETS74DI-ETS74ND	MAG74D			
1214 -			HDI143S		SHDI180S
1620 -			HDI220S	HD220S2/CS	SHDI220S-SHD225S
2414, 2514 -			HDI143S		SHDI180S
2614, 2714 -			HDI143S		SHDI180S
BRISTOL					
ATS 150-PD2 (I & II), 150-PD4 -	ETS100D2N	MAG100D			
ATS 160-PD2 -			246850HD	HD110D2/CS	
ATS 188-P4 -	ETS100D2N	MAG100D			
ATS 376-PD4, 397-PD4 -	ETS100D2N	MAG100D			
BS BS 404-5 Taurus, BS 404-5 Taurus-II, BS 504-5 -			246850HD	HD110D2/CS	
E E 22 (Perkins P3), E 22 (diesel) -	ETS100D2N	MAG100D			
PD 25 PD (diesel), Other PD -	ETS100D2N	MAG100D			
zzOTHERS 25-D52, 25-D30, Band tractor, Duplex, Europa -	ETS100D2N	MAG100D			
BRODDWAY					
City, Excavator City -	ETS74DI-ETS74ND	MAG74D			
Redskapsbil -			246850HD	HD110D2/CS	
BROOM & WADE					
CA/CV/CW CA 15 -			246850HD	HD110D2/CS	
CA/CV/CW CV 125 S, CV 160 S, CV 250 S -			246850HD	HD110D2/CS	
CA/CV/CW CW 400 -			HDI110S		SHDI140S
SV/SW SV 398 (Leyland engine) -			HDI110S		SHDI140S
WR WR 60, WR 65, WR 85, WR 100 (Ford/Perkins engine) -			246850HD	HD110D2/CS	
WR WR 120, WR 250 (Leyland engine) -	ETS100D2N	MAG100D			
WR WR 125, WR 160, WR 175, WR 200, WR 210, WR 250 (Ford/Perkins engine) -			246850HD	HD110D2/CS	
WR WR 315, WR 380 (Leyland engine) -			HDI110S		SHDI140S

	RUN / ETS / ES	MAGIS	CARGO/WET	CARGO/DRY	CARGO SHD
BROOM & WADE					
WR WR 380, WR 600 -			246850HD	HD110D2/CS	
BUCHER					
200-800 Series 206, 206 Excavator -	ETS100D2N	MAG100D			
200-800 Series 616 B, 646 -			246850HD	HD110D2/CS	
1000-2000 Series 1600 -	ETS100D2N	MAG100D			
1000-2000 Series 2400, 2800 -	ETS74DI-ETS74ND	MAG74D			
JENIT 4000 -	ETS74DI-ETS74ND	MAG74D			
POLYTRAC 40, 42, 50 -	ETS100D2N	MAG100D			
S S 15, S 15 Excavator -			HDI110S		SHDI140S
TM TM 600 -	ETS60D3N				
TM TM 800, TM 850, TM 1000 -	ETS74DI-ETS74ND	MAG74D			
BD BD 2 -			HDI110S		SHDI140S
DF DF 18 Superstandard -			246850HD	HD110D2/CS	
EFD EFD 6 -			HDI110S		SHDI140S
GP GP 21 -			HDI110S		SHDI140S
MEF/MS MEF 18, MS 12, MS 13 -			246850HD	HD110D2/CS	
OP/OS OP 17, OP 18, OS 13 -			246850HD	HD110D2/CS	
RF/RP RF 19 -			246850HD	HD110D2/CS	
RF/RP RP 21 -			HDI110S		SHDI140S
TM/UM TM 4, UM 4, UPM 4, UNM 4 -			246850HD	HD110D2/CS	
VS/ZS VS 13, ZS 13, ZS 21 -			246850HD	HD110D2/CS	
BUKH					
44 -	ETS100D2N	MAG100D			
70, 90 -			HDI110S		SHDI140S
302, 403, 452, 454, 554 -	ETS100D2N	MAG100D			
D 40, D 45, D 50, DZ 30, DZ 45 -	ETS100D2N	MAG100D			
Hercules 90, Juno W 50 -	ETS100D2N	MAG100D			
BUSATTO					
B 225, B 325, B 330, Lambda -	ETS100D2N	MAG100D			
BUSCHER					
City King -	ETS100D2N	MAG100D			
TP 2400 -	ETS100D2N	MAG100D			
TR 2400 -	ETS100D2N	MAG100D			
CARRARO					
AGRI PLUS 65, 75, 85 (F) (V)	ETS100ND				
100-900 Series 390 -	ETS50D4N				
100-900 Series 500, 510 -	ETS50D4N				
1000-8000 Series 1000-5, 1000-6, 1000-8 -	ETS100D2N	MAG100D			
1000-8000 Series 2000, 2700, 3200 -	ETS74DI-ETS74ND	MAG74D			
1000-8000 Series 3700 -	ETS74DI-ETS74ND	MAG74D			
1000-8000 Series 4000, 4200, 4400, 4400 HST, 4400 SP -	ETS74DI-ETS74ND	MAG74D			

	RUN / ETS / ES	MAGIS	CARGO/WET	CARGO/DRY	CARGO SHD
CARRARO					
1000-8000 Series 5600 HTM -	ETS74DI-ETS74ND	MAG74D			
4N	ETS92ND				
5.1000, 6.1000, 8.1000	ETS92ND				
48.2, 48.4, 58.2, 58.4	ETS100ND				
68.2, 68.4, 78.2, 78.4			HD155D	HD160D2/CS	
88.2, 88.4, 98.2, 98.4			HD155D	HD160D2/CS	
118.4, 138.4			HD155D	HD160D2/CS	
420.5	ES70540S				
502 FS, V	ETS100ND				
502, 504, 505, 505 CL, 520.5, 534	ETS100ND				
602, 604	ETS100ND				
605 C, CL, CM	ETS100ND				
652, 654			HD155D	HD160D2/CS	
655 CL, CS	ETS100ND				
720.5	ETS100ND				
732, 734			HD155D	HD160D2/CS	
735, 740, 746, 750, 765, 766	ETS100ND				
820.5			HD132D		HD132D/CS
844			HD155D	HD160D2/CS	
920.5 TURBO			HD132D		HD132D/CS
984			HD155D	HD160D2/CS	
2700	ETS74ND-ETS74DI				
3400, 3600	ES70540S				
3500 CL	ETS100ND				
3700	ETS74ND-ETS74DI				
4000	ETS100ND				
4200	ETS74ND-ETS74DI				
4400, 4500	ES70540S				
4500 CL, 4800, 5000, 5000 CL, 5500	ETS100ND				
7700, 8000	ETS100ND				
BITRAC 3800 HST, 4300, HC types, HS types -	ETS74DI-ETS74ND	MAG74D			
CARRARINO SERIES 43	ETS74DI-ETS74ND	MAG74D			
CARRARINO SUPER	ETS74DI-ETS74ND	MAG74D			
ERGIT 7400, 9400	ETS100ND				
ERGIT SRX 6400, 8400, 9400, 10400	ETS100ND				
ERGIT TC 5400, 6400	ETS100ND				
ERGIT TF 6400, 7400, 8400, 9400	ETS100ND				
ERGIT TGF 7400, 9400, 10400	ETS100ND				
ERGIT TN 5400, 6400	ETS100ND				
ERGIT TRF 7400, 8400, 9400	ETS100ND				
ERGIT TRG 9400, 10400	ETS100ND				
ERGIT TRH 9400	ETS100ND				
ERGIT TRX 6400, 7400, 8400, 9400, 10400	ETS100ND				
ERGIT TTR 6400, 8400, 9400, 10400	ETS100ND				
MAKI 535, 536 R	ETS100ND				
MINI CARRARINO	ETS40NS				
MOTOCOLTIVATORE PLANEMATIC	ES70540S				

	RUN / ETS / ES	MAGIS	CARGO/WET	CARGO/DRY	CARGO SHD
CARRARO					
MOTOCOLTIVATORE CARRARINO 390, 500, 510	ETS40NS				
RONDO' K327, K333	ETS45ND	MAG45D			
SP 4400, 4400 HST	ETS74ND-ETS74DI				
SUPERCAR 3200, 3700	ETS74ND-ETS74DI				
SUPERCAR 5000, 5500	ETS100ND				
SUPERTIGRE 5000	ETS74ND-ETS74DI				
SUPERTIGRE 5500, 5500 VIGNETO	ETS100ND				
SUPERTIGRE 625, 842	ETS100ND				
SUPERTIGRE 7500	ETS100ND				
SUPERTRAC HTM	ETS100ND				
TIGRE 2000, 2700, 3100, 3200, 3700, 4200	ETS74ND-ETS74DI				
TIGRE 4RM	ES45330D				
TIGRE 5000, 5500, 7500, 7700	ETS100ND				
TIGRECAR serie18 3100, 3700	ETS74ND-ETS74DI				
TIGRECAR 3100, 3200, 3700	ETS74ND-ETS74DI				
TIGRECAR 3100 GST, 4300 GST	ETS74ND-ETS74DI				
TIGRECAR 5000, 5500	ETS100ND				
TIGRECAR CC (PC) (PL) 5500, 6500, 8400	ETS100ND				
TIGRE COUNTRY 3700, 4300, 4400	ETS74ND-ETS74DI				
TIGRE TRANS	ETS74ND-ETS74DI				
TIGRONE 635, 636, 740, 742	ETS100ND				
TIGRONE 765 TROPICAL			HD155D	HD160D2/CS	
TIGRONE 835 R, 836	ETS100ND				
TIGRONE 3200, 3700, 4200, 4500	ETS74ND-ETS74DI				
TIGRONE 5000, 5400(T), 5500 (S) (TCF) (TNE), 6500 SN (TN), 7500, 7700, 8000, 8400 SX (TCF)(TN)	ETS100ND				
TIGRONE ATLAS 746 RS, 750, 750 RS, 765, 766			HD120D	HD120D2/CS	
TIGROTTO TRANS	ETS74ND-ETS74DI				
TRACTORS 1020			HD155D	HD160D2/CS	
TRATTORI 2800, 4000, 4800	ES70540S				
TRATTORI 7000 series	ETS100ND				
TTR 4400 HST (Agri)	ETS74ND-ETS74DI				
TTR 4400 HST	ETS74ND-ETS74DI				
UNICAR All types -	ETS100D2N	MAG100D			
CASE IH					
20-90 Series 21 B, 21 D -			246800.1HD		
20-90 Series 45-46 D, 45-66, 45-66 S, 45-76 -	ETS100D2N	MAG100D			
20-90 Series 50 Solar, 50-66, 50-86 S, 55-66, 55-66 S, 55-76 -	ETS100D2N	MAG100D			
20-90 Series 60 Solar, 60-86 S -	ETS100D2N	MAG100D			
20-90 Series 60-94 -			HDI143S		SHDI180S
20-90 Series 65 D -	ETS100D2N	MAG100D			
20-90 Series 70 -			246850HD	HD110D2/CS	
100-900 Series 120 -			HDI143S		SHDI180S
100-900 Series 121 B, 121 D -			246800.1HD		
100-900 Series 130, 150 -			HDI143S		SHDI180S

	RUN / ETS / ES	MAGIS	CARGO/WET	CARGO/DRY	CARGO SHD
CASE IH					
100-900 Series 165 -			246850HD	HD110D2/CS	
100-900 Series 170 (older types) -			HDI143S		SHDI180S
100-900 Series 221 B, 221 D -			246800.1HD		
100-900 Series 275 S -	ETS100D2N	MAG100D			
100-900 Series 293 -	ETS100D2N	MAG100D			
100-900 Series 295 B -			HDI220S	HD220S2/CS	SHDI220S-SHD225S
100-900 Series 303, 304 LS -					
100-900 Series 307, 307 LS -	ETS100D2N	MAG100D			
100-900 Series 320 -	ETS100D2N	MAG100D			
100-900 Series 321 B, 321 D -	ETS100D2N	MAG100D	246800.1HD		
100-900 Series 322, 323, 323 Vign, 324 -	ETS100D2N	MAG100D			
100-900 Series 325 -			HDI110S		SHDI140S
100-900 Series 326 -	ETS100D2N	MAG100D			
100-900 Series 330 -			HDI110S		SHDI140S
100-900 Series 350 (diesel), 350 GT, 353, 353 Narrow, 380 GT1, 383, 383 Vign -	ETS100D2N	MAG100D			
100-900 Series 400 -			246850HD	HD110D2/CS	
100-900 Series 421 B, 423, 423 Vign, 430, 433, 433 Narrow, 433 SA, 433 Vign -	ETS100D2N	MAG100D			
100-900 Series 450 -			HDI143S		SHDI180S
100-900 Series 466 -			HDI110S		SHDI140S
100-900 Series 510 -			246850HD	HD110D2/CS	
100-900 Series 510 M -			HDI143S		SHDI180S
100-900 Series 523 (older types) -			HDI143S		SHDI180S
100-900 Series 533, 533 SA, 533 Vign -	ETS100D2N	MAG100D			
100-900 Series 540 -			HDI143S		SHDI180S
100-900 Series 545 -			246800.1HD		
100-900 Series 553 -	ETS100D2N	MAG100D			
100-900 Series 560 -			HDI220S	HD220S2/CS	SHDI220S-SHD225S
100-900 Series 566 -			HDI110S		SHDI140S
100-900 Series 580 L, 580 LE, 580 LSP, 580 LXT, 580 M, 580 MXT, 580 SK, 580 SLE, 580 SM -			246800.1HD		
100-900 Series 580 SR -	ETS60D3N				
100-900 Series 588 -	ETS100D2N	MAG100D			
100-900 Series 590 (older types) -			HDI143S		SHDI180S
100-900 Series 590 LSP, 590 SLE, 590 SM, 595 LSP, 595 SLE, 595 SP -			246800.1HD		
100-900 Series 590 SR, 595 SR -	ETS60D3N				
100-900 Series 621, 622 -			246850HD	HD110D2/CS	
100-900 Series 623 Vign, 624 (newer types) -	ETS100D2N	MAG100D			
100-900 Series 624 (older types) -			HDI143S		SHDI180S
100-900 Series 633, 633 SA, 633 Vign, 633 XL -	ETS100D2N	MAG100D			
100-900 Series 640 -			HDI143S		SHDI180S
100-900 Series 641, 642 -			246850HD	HD110D2/CS	
100-900 Series 680 F, 680 G, 680 H -			246850HD	HD110D2/CS	
100-900 Series 683 -	ETS74DI-ETS74ND	MAG74D			
100-900 Series 688, 688 B, 695, 695 Super, 695 XLA -	ETS100D2N	MAG100D			

	RUN / ETS / ES	MAGIS	CARGO/WET	CARGO/DRY	CARGO SHD
CASE IH					
100-900 Series 706 -	ETS100D2N	MAG100D			
100-900 Series 716 -	ETS100D2N	MAG100D			
100-900 Series 724 (newer types), 730 -			246850HD	HD110D2/CS	
100-900 Series 724 (older types) -			HDI143S		SHDI180S
100-900 Series 733, 733 Vign, 733 XL -	ETS100D2N	MAG100D			
100-900 Series 734 -			HDI143S		SHDI180S
100-900 Series 740 -			246850HD	HD110D2/CS	
100-900 Series 745 S -	ETS100D2N	MAG100D			
100-900 Series 750 B -			246850HD	HD110D2/CS	
100-900 Series 760 B -			246850HD	HD110D2/CS	
100-900 Series 780 -	ETS74DI-ETS74ND	MAG74D			
100-900 Series 788 (newer types), 795 -	ETS100D2N	MAG100D			
100-900 Series 800 -			HDI220S	HD220S2/CS	SHDI220S-SHD225S
100-900 Series 824, 824 Vign, 832, 833, 833 XL, 833 Vign -	ETS100D2N	MAG100D			
100-900 Series 834 -			HDI143S		SHDI180S
100-900 Series 840-4, 841, 844 S -	ETS100D2N	MAG100D			
100-900 Series 850 -			HDI220S	HD220S2/CS	SHDI220S-SHD225S
100-900 Series 880 Selectamatic(petrol), 885 (petrol) -	ETS100D2N	MAG100D			
100-900 Series 923, 943 -			HDI110S		SHDI140S
100-900 Series 945 -			HDI220S	HD220S2/CS	SHDI220S-SHD225S
100-900 Series 953, 955, 955 XL, 956, 956 XL -			HDI110S		SHDI140S
100-900 Series 970 -			246850HD	HD110D2/CS	
100-900 Series 990, 990-1, 995 (older types) -			246850HD	HD110D2/CS	
1000-9000 Series 1150 B, 1150 C -	ETS74DI-ETS74ND	MAG74D			
1000-9000 Series 1188 -			HDI110S		SHDI140S
1000-9000 Series 1246 -			HDI143S		SHDI180S
1000-9000 Series 1255, 1255 XL -			HDI143S		SHDI180S
1000-9000 Series 1256 XL -			HDI110S		SHDI140S
1000-9000 Series 1280, 1288 -			HDI143S		SHDI180S
1000-9000 Series 1380 -			HDI143S		SHDI180S
1000-9000 Series 1529 -			246850HD	HD110D2/CS	
1000-9000 Series 1580 -			HDI143S		SHDI180S
1000-9000 Series 2130, 2140, 2150, 2166, 2188 -			246850HD	HD110D2/CS	
1000-9000 Series 2290, 2294 -			246850HD	HD110D2/CS	
1000-9000 Series 2366 X-Clusive, 2388 X-Clusive, 2390 -			246850HD	HD110D2/CS	
1000-9000 Series 2470 -			246850HD	HD110D2/CS	
1000-9000 Series 2504 -	ETS100D2N	MAG100D			
1000-9000 Series 2525, 2530 -			246850HD	HD110D2/CS	
1000-9000 Series 3434 -			246850HD	HD110D2/CS	
1000-9000 Series 4200 B -			246850HD	HD110D2/CS	
1000-9000 Series 4300 B -			246850HD	HD110D2/CS	
1000-9000 Series 4500 B -			HDI110S		SHDI140S
1000-9000 Series 4566 -			HDI143S		SHDI180S
1000-9000 Series 4694, 4694 MB -			246850HD	HD110D2/CS	
1000-9000 Series 5033 -	ETS100D2N	MAG100D			
1000-9000 Series 5120, 5130, 5140 -			HDI143S		SHDI180S

	RUN / ETS / ES	MAGIS	CARGO/WET	CARGO/DRY	CARGO SHD
CASE IH					
1000-9000 Series 5566 -			HDI143S		SHDI180S
1000-9000 Series 6000, 6250, 6350, 6550, 6650, 6850 -			HDI143S		SHDI180S
1000-9000 Series 7110, 7120, 7130, 7140, 7210, 7220, 7230, 7240, 7250 -			HDI143S		SHDI180S
1000-9000 Series 8100 -			HDI143S		SHDI180S
1000-9000 Series 8150, 8350, 8450, 8550, 8750, 8900, 8950 -			HDI143S		SHDI180S
1000-9000 Series 9000 -			HDI110S		SHDI140S
B/BD/BH/BTD/BUD B 5, B 85 -			246850HD	HD110D2/CS	
B/BD/BH/BTD/BUD B 450 Distillate -	ETS100D2N	MAG100D			
B/BD/BH/BTD/BUD BD 8 -	ETS74DI-ETS74ND	MAG74D			
B/BD/BH/BTD/BUD BUD 264, BUD 281 -			HDI220S	HD220S2/CS	SHDI220S-SHD225S
C/CF/CK/CS/CT/CVX/CX CF 60, CF 80 -			HDI110S		SHDI140S
C/CF/CK/CS/CT/CVX/CX CS 48, CS 52, CS 58, CS 63, CS 68, CS 75, CS 78, CS 86, CS 94, CS 100, CS 110 -	ETS92ND-ETS100D2N	MAG100D			
C/CF/CK/CS/CT/CVX/CX CS 120 -			HDI143S-HD180S		SHDI180S
C/CF/CK/CS/CT/CVX/CX CS 130 -	ETS100D2N	MAG100D			
C/CF/CK/CS/CT/CVX/CX CS 150 -			HDI143S-HD180S		SHDI180S
C/CF/CK/CS/CT/CVX/CX CT 5050, CT 5060, CT 5070, CT 5080 -	ETS100D2N	MAG100D			
CVX 140, 150, 160, 175 (195) '08→			HD180D	HD180D2/CS	
CVX 1135, 1145, 1155, 1170, 1190			HD180S	HD180S2/CS-HD200S2/CS	
D/DH/DT D 50, D 60, D 85 -	ETS100D2N	MAG100D			
D/DH/DT DH 4, DH 5 -			246850HD	HD110D2/CS	
D/DH/DT DH 30, DH 50, DH 60, DT 55, DT 66 -	ETS100D2N	MAG100D			
FL/FR FL 11 -			HDI143S		SHDI180S
FL/FR FL 525, FR 7 -			246850HD	HD110D2/CS	
FL/FR FR 10, FR 10 B, FR 12, FR 12 B -	ETS100D2N	MAG100D			
FL/FR FR 20, FR 20 B, FR 130 -	ETS100D2N	MAG100D			
G G 170, G 190, G 210, G 240 -			246850HD	HD110D2/CS	
H/HA H 30 B, H 35, H 50, H 50 B -	ETS100D2N	MAG100D			
H/HA H 90 E -			HDI220S	HD220S2/CS	SHDI220S-SHD225S
JX 70 (80) (90) (95) '08→			HD132D		
JX 75 (85) (95) C MAXXIMA			HD105D	HD105D2/CS	
JX 1070 C (1075 C) (1085 C) (1095 C)	ETS100ND				
JD/JX/JXU JX 55, JX 65, JX 75, JX 85, JX 95 -			246800.1HD		
JD/JX/JXU JX 1075 C, JXU 70, JXU 80, JXU 90, JXU 90 U, JXU 100 -	ETS100D2N	MAG100D			
JX Quantum 85 C (95 C) '08→	ETS100ND				
JXU 70 (80) (90) (100) MAXXIMA			HD105D	HD105D2/CS	
JXU 85 (95) (105) '08→			HD132D		
JXU 1080 (1090) (1100) →'07			HD132D		
K/KH/KL K 425 B -			HDI143S		SHDI180S
K/KH/KL K 442 B -			HDI143S		SHDI180S
K/KH/KL K 540, K 555, K 565 -			HDI143S		SHDI180S

	RUN / ETS / ES	MAGIS	CARGO/WET	CARGO/DRY	CARGO SHD
CASE IH					
L L 120, L 120 B, L 150, L 160 -			HDI110S		SHDI140S
M/MC/MTX/MXM M 975 -	ETS100D2N	MAG100D			
M/MC/MTX/MXM MXM 120, MXM 130, MXM 140, MXM 155, MXM 175, MXM 190 -			HDI143S		SHDI180S
MAXXUM 100 X (110 X) (115 X) (125 X) (140 X) '08→			HD132D		
MXU100, 110, 115, 125, 135			HD105D	HD105D2/CS	
MXM 120 (130) (140) (155) (170) (190) MAXXUM			HD180S	HD180S2/CS-HD200S2/CS	
PC/PW PC 50 MR -	ETS74DI-ETS74ND	MAG74D			
PUMA 165 (180) (210) '08→			HD180S	HD180S2/CS-HD200S2/CS	
SELECTAMATIC 880, 885, 996 -			246850HD	HD110D2/CS	
SK/SKO SK 818, SK 820-5 -	ETS74DI-ETS74ND	MAG74D			
T/TD TD 25, TD 25 C, TD 30 -			HDI220S	HD220S2/CS	SHDI220S-SHD225S
TS TS 90, TS 100, TS 110 -			246850HD	HD110D2/CS	
W/WX W 20 C -	ETS100D2N	MAG100D			
W/WX W 24, W 24 B, W 24 E, W 26 B -			HDI143S		SHDI180S
W/WX WX 90, WX 120, WX 145, WX 165 -	ETS74DI-ETS74ND	MAG74D			
W/WX WX 170 -			HDI110S		SHDI140S
W/WX WX 185 -	ETS100D2N	MAG100D			
W/WX WX 200 -			HDI110S		SHDI140S
W/WX WX 210, WX 240 -	ETS100D2N	MAG100D			
OTHERS E 295 -			HDI220S	HD220S2/CS	SHDI220S-SHD225S
OTHERS R Series -			HDI220S	HD220S2/CS	SHDI220S-SHD225S
20-90 Series 31 B, 31 F, 34 F, 45-46 D, 45-66 S -	ETS100D2N	MAG100D			
20-90 Series 50, 50-66, 50-86 S -	ETS100D2N	MAG100D			
20-90 Series 55-76, 56-66 S, 60, 60-86 S -	ETS100D2N	MAG100D			
20-90 Series 60-94, 65-94 -			HDI143S		SHDI180S
20-90 Series 65 D -	ETS100D2N	MAG100D			
20-90 Series 72-94, 82-94 -			HDI143S		SHDI180S
20-90 Series 88-94 -			HDI143S		SHDI180S
20-90 Series 90 -			246850HD	HD110D2/CS	
20-90 Series 98 SL, 98 CS Maxi -			HDI110S		SHDI140S
100-900 Series 100 -			246850HD	HD110D2/CS	
100-900 Series 110 -			246850HD	HD110D2/CS	
100-900 Series 180, 190 -			HDI143S		SHDI180S
100-900 Series 250, 250 K -	ETS100D2N	MAG100D			
100-900 Series 275 S -	ETS100D2N	MAG100D			
100-900 Series 303, 304 LSA Farmer, 304 LSA Solar, 307, 307 LS -	ETS100D2N	MAG100D			
100-900 Series 311, 312 -			HDI110S		SHDI140S
100-900 Series 350, 350 GT, 353 V -	ETS100D2N	MAG100D			
100-900 Series 397 LS -	ETS100D2N	MAG100D			
100-900 Series 450 (newer types) -			HDI143S		SHDI180S
100-900 Series 466 -			HDI110S		SHDI140S
100-900 Series 523 -			HDI143S		SHDI180S
100-900 Series 533 -	ETS100D2N	MAG100D			
100-900 Series 566 -			HDI110S		SHDI140S
100-900 Series 580 G -			246850HD	HD110D2/CS	

	RUN / ETS / ES	MAGIS	CARGO/WET	CARGO/DRY	CARGO SHD
CASE IH					
100-900 Series 619, 621, 623 V -			246850HD	HD110D2/CS	
100-900 Series 624 -			HDI143S		SHDI180S
100-900 Series 633 (newer types) -	ETS100D2N	MAG100D			
100-900 Series 666 -			HDI110S		SHDI140S
100-900 Series 680 -			HDI143S		SHDI180S
100-900 Series 695, 695 Super -	ETS100D2N	MAG100D			
100-900 Series 710 -			246850HD	HD110D2/CS	
100-900 Series 721 -			246850HD	HD110D2/CS	
100-900 Series 724 -			HDI143S		SHDI180S
100-900 Series 724, 730, 733, 734, 740 -	ETS100D2N	MAG100D			
100-900 Series 745 S -	ETS100D2N	MAG100D			
100-900 Series 770, 775, 780, 780-1 -			246850HD	HD110D2/CS	
100-900 Series 795 -			246850HD	HD110D2/CS	
100-900 Series 821, 824 -			246850HD	HD110D2/CS	
100-900 Series 832, 833, 844 S -	ETS100D2N	MAG100D			
100-900 Series 880, 880 D -			246850HD	HD110D2/CS	
100-900 Series 885, 885 G (diesel), 885 N (diesel) -			246850HD	HD110D2/CS	
100-900 Series 900 -			246850HD	HD110D2/CS	
100-900 Series 930 -			246850HD	HD110D2/CS	
100-900 Series 955, 955 XL, 956, 956 XL (newer types) -			HDI110S		SHDI140S
100-900 Series 970, 990 D, 990 S, 995, 995-6, 996 -			246850HD	HD110D2/CS	
1000-9000 Series 1000 -			246850HD	HD110D2/CS	
1000-9000 Series 1046, 1055, 1055 XL (newer types), 1056, 1056 XL (newer types) -			HDI110S		SHDI140S
1000-9000 Series 1180 -			HDI143S		SHDI180S
1000-9000 Series 1190, 1194 (newer types), 1200 -			246850HD	HD110D2/CS	
1000-9000 Series 1210, 1212 -			246850HD	HD110D2/CS	
1000-9000 Series 1255 XL (newer types) -			HDI143S		SHDI180S
1000-9000 Series 1255 XL (older types), 1256 XL -			HDI110S		SHDI140S
1000-9000 Series 1380 -			HDI143S		SHDI180S
1000-9000 Series 1400, 1410, 1412 -			246850HD	HD110D2/CS	
1000-9000 Series 1450, 1450 B -			HDI110S		SHDI140S
1000-9000 Series 1455 Laser, 1455 XL -			HDI143S		SHDI180S
1000-9000 Series 1690 DT -			246850HD	HD110D2/CS	
1000-9000 Series 1818, 1825 -	ETS60D3N				
1000-9000 Series 2090, 2094 (older types) -			246850HD	HD110D2/CS	
1000-9000 Series 2670 (newer types), 3000 -			246850HD	HD110D2/CS	
1000-9000 Series 3800 -	ETS100D2N	MAG100D			
1000-9000 Series 4490 -			246850HD	HD110D2/CS	
1000-9000 Series 4566 -			HDI143S		SHDI180S
1000-9000 Series 5140, 5150 -			246850HD	HD110D2/CS	
1000-9000 Series 5566, 6000, 6090, 6100, 6250, 6250 HI, 6300, 6350, 6400, 6400 A -			HDI143S		SHDI180S
1000-9000 Series 8085 Colombus, Comet Die -	ETS100D2N	MAG100D			
1000-9000 Series 8100, 8150, 8200 -			HDI143S		SHDI180S
1000-9000 Series 8300 Mega -			246850HD	HD110D2/CS	
1000-9000 Series 8600 Mega -			246850HD	HD110D2/CS	

	RUN / ETS / ES	MAGIS	CARGO/WET	CARGO/DRY	CARGO SHD
CASE IH					
1000-9000 Series 9280 -			246850HD	HD110D2/CS	
AF/AFX AF 1640 -			246850HD	HD110D2/CS	
AF/AFX AFX 8010 -			HDI143S		SHDI180S
B/BL BL 580 -			246850HD	HD110D2/CS	
C/CF CF 60, CF 80 -			HDI110S		SHDI140S
COMMANDER 112 CS, 115 CS, 116 CS -			HDI143S		SHDI180S
CS CS 58, CS 63, CS 68, CS 75, CS 78, CS 86, CS 94 -	ETS100D2N	MAG100D			
CS CS 100, CS 110, CS 130, CS 150 -			HDI143S		SHDI180S
CUEILLEUR 218, 695 -			HDI143S		SHDI180S
CVX CVX 120, CVX 130 -			HDI143S		SHDI180S
CVX CVX 150 (older types) -			HDI143S		SHDI180S
CVX CVX 170 -			HDI143S		SHDI180S
CVX CVX 1135, CVX 1145, CVX 1155, CVX 1170, CVX 1190, CVX 1195 -			HDI143S		SHDI180S
CX CX 900 -	ETS100D2N	MAG100D			
DOMINATOR 38, 48, 56 -	ETS100D2N	MAG100D			
DOMINATOR 105, 106, 108 -			HDI143S		SHDI180S
DOMINATOR 115 CS, 116 CS -			HDI110S		SHDI140S
JAGUAR 675, 680 H, 680 S, 682 SL, 685 -			HDI143S		SHDI180S
JAGUAR 695 SL -			HDI110S		SHDI140S
JX/JXU JX 90, JX 90 U -			246850HD	HD110D2/CS	
JX/JXU JX 1070 C, JX 1075 C, JX 1085 C -	ETS100D2N	MAG100D			
M/MXU MXU 100, MXU 110, MXU 115, MXU 125, MXU 130, MXU 135 -			HDI143S		SHDI180S
MAXXUM MXM 120, MXM 130, MXM 140, MXM 155, MXM 170, MXM 175, MXM 190 -			HDI143S		SHDI180S
MERCATOR 50 -	ETS74DI-ETS74ND	MAG74D			
PUMA 165, 180, 210 -			HDI143S		SHDI180S
SELECTAMATIC 770, 780, 880, 885 -			246850HD	HD110D2/CS	
UNILOADER 1845 -			246850HD	HD110D2/CS	
W W 7 E, W 9 B, W 9 BC, W 9 C, W 10 E, W 14, W 15, W 30 -			246850HD	HD110D2/CS	
W W 220 C -			246850HD	HD110D2/CS	
zzOTHERS 3x80 V, 3x95 -			HDI110S		SHDI140S
zzOTHERS G 170, G 190, G 210, G 240, G 240 TS -			246850HD	HD110D2/CS	
zzOTHERS Implematic 770, 880 -			246850HD	HD110D2/CS	
zzOTHERS Solar 50, 60 -	ETS100D2N	MAG100D			
CATERPILLAR					
10-90 Series 12 D -			HDI143S		SHDI180S
10-90 Series 86 -			246850HD	HD110D2/CS	
100-900 Series 152 -			HDI143S		SHDI180S
100-900 Series 161 A -			HDI110S		SHDI140S
100-900 Series 181 A -			HDI110S		SHDI140S
100-900 Series 182 -			HDI143S		SHDI180S
100-900 Series 206 -	ETS100D2N	MAG100D			
100-900 Series 245 -			HDI220S	HD220S2/CS	SHDI220S-SHD225S

	RUN / ETS / ES	MAGIS	CARGO/WET	CARGO/DRY	CARGO SHD
CATERPILLAR					
100-900 Series 245 (DES 12V) -			HDI143S		SHDI180S
100-900 Series 261, 261 Wheelscraper -			HDI143S		SHDI180S
100-900 Series 311, 312, 320, 325, 330 -			HDI220S	HD220S2/CS	SHDI220S-SHD225S
100-900 Series 375, 390 -			HDI220S	HD220S2/CS	SHDI220S-SHD225S
100-900 Series 400 P, 410, 411 -			HDI220S	HD220S2/CS	SHDI220S-SHD225S
100-900 Series 440, 441 -			HDI220S	HD220S2/CS	SHDI220S-SHD225S
100-900 Series 613 C, 615 C -			HDI220S	HD220S2/CS	SHDI220S-SHD225S
100-900 Series 621, 623, 627, 630, 632, 633, 637, 639 (direct start) -			HDI220S	HD220S2/CS	SHDI220S-SHD225S
100-900 Series 630 B, 631 B, 633, 662 Wheelscraper -			HDI143S		SHDI180S
100-900 Series 641, 650, 651, 657, 660, 662, 666 (direct start) -			HDI220S	HD220S2/CS	SHDI220S-SHD225S
100-900 Series 769, 769 Dumptruck (direct start) -			HDI143S		SHDI180S
100-900 Series 769, 769 Dumptruck (secondary start), 769 Roller -	ETS74DI-ETS74ND	MAG74D			
100-900 Series 773, 776 C, 777, 777 D -			HDI220S	HD220S2/CS	SHDI220S-SHD225S
100-900 Series 820 -	ETS74DI-ETS74ND	MAG74D			
100-900 Series 824, 825, 826 (direct start) -			HDI220S	HD220S2/CS	SHDI220S-SHD225S
100-900 Series 834, 835 (direct start) -			HDI220S	HD220S2/CS	SHDI220S-SHD225S
100-900 Series 840 -			246850HD	HD110D2/CS	
100-900 Series 886 -			HDI143S		SHDI180S
100-900 Series 890 -			HDI110S		SHDI140S
100-900 Series 901, 901-1, 901-2 -			246850HD	HD110D2/CS	
100-900 Series 910 F, 911 (inside frame) -			246850HD	HD110D2/CS	
100-900 Series 911 (outside frame) -			HDI110S		SHDI140S
100-900 Series 916, 918, 918 F -			246850HD	HD110D2/CS	
100-900 Series 920 D, 921, 921-1 -			HDI110S		SHDI140S
100-900 Series 951 (direct start) -			HDI110S		SHDI140S
100-900 Series 954 -			HDI110S		SHDI140S
100-900 Series 961 Harvester -	ETS100D2N	MAG100D			
100-900 Series 980, 980 F -			HDI220S	HD220S2/CS	SHDI220S-SHD225S
135H			HD155D	HD160D2/CS	
160H			HD155D	HD160D2/CS	
350			HD155D	HD160D2/CS	
814F			HD155D	HD160D2/CS	
938F (950F) WHA			HD155D	HD160D2/CS	
970F			HD155D	HD160D2/CS	
777D			HD180D	HD180D2/CS	
1000-8000 Series 2550 -			246850HD	HD110D2/CS	
1000-8000 Series 3408 T, 3408 TA -			HDI220S	HD220S2/CS	SHDI220S-SHD225S
1000-8000 Series 8335, 8431, 8435, 8532, 8535, 8541, 8860 -			HDI143S		SHDI180S
3153-3253-3353				HD105S2/CS	
3253					
5130			HD155D	HD160D2/CS	
5130B,B ME			HD180D	HD180D2/CS	
A/AH/AM/AMP AH 40, AH 50, AH 60 -			HDI143S		SHDI180S

	RUN / ETS / ES	MAGIS	CARGO/WET	CARGO/DRY	CARGO SHD
CATERPILLAR					
A/AH/AM/AMP AM 25 -			HDI143S		SHDI180S
A/AH/AM/AMP AM 30, AM 36, AM 60 -			HDI143S		SHDI180S
B/BHF/BM/BMD B 10, B 12, B 15, B 16, B 18, B 20 (diesel) -			HDI220S	HD220S2/CS	SHDI220S-SHD225S
B/BHF/BM/BMD B 22, B 24, B 25 (diesel) -			HDI220S	HD220S2/CS	SHDI220S-SHD225S
B/BHF/BM/BMD BHF 16, BHF 20 (diesel) -			HDI143S		SHDI180S
C/CB/CKL C 500-40 D, C 500-55 D, C 500-Y30 D -			246850HD	HD110D2/CS	
D/DC/DCY/DW D 3 -			HDI220S	HD220S2/CS	SHDI220S-SHD225S
D/DC/DCY/DW D 4 D, D 6 C -			HDI110S		SHDI140S
D/DC/DCY/DW D 44, D 50 -			HDI220S	HD220S2/CS	SHDI220S-SHD225S
D/DC/DCY/DW D 550, D 650 -			HDI220S	HD220S2/CS	SHDI220S-SHD225S
D/DC/DCY/DW DC 6, DCY -	ETS100D2N	MAG100D			
D/DC/DCY/DW DW 10 -			HDI220S	HD220S2/CS	SHDI220S-SHD225S
D/DC/DCY/DW DW 60 -			HDI110S		SHDI140S
D4C			HD155D	HD160D2/CS	
D7G			HD155D	HD160D2/CS	
D7R series II, WHA			HD155D	HD160D2/CS	
D9R, D10R, D11R			HD180D	HD180D2/CS	
D9R (D10R) WHA			HD180D	HD180D2/CS	
E/EST/ESTD EST 16, EST 245, EST 621, EST 627, EST 630, EST 631, EST 632 -			HDI220S	HD220S2/CS	SHDI220S-SHD225S
E/EST/ESTD EST 633, EST 637, EST 641, EST 650, EST 651, EST 657, EST 660 -			HDI220S	HD220S2/CS	SHDI220S-SHD225S
E/EST/ESTD EST 666, EST 824, EST 825, EST 834, EST 835 -			HDI220S	HD220S2/CS	SHDI220S-SHD225S
E/EST/ESTD EST 910, EST 931, EST 980, EST 988, EST 992 -			HDI220S	HD220S2/CS	SHDI220S-SHD225S
E/EST/ESTD ESTD 7, ESTD 8, ESTD 9, ESTD 10 -			HDI220S	HD220S2/CS	SHDI220S-SHD225S
E/EST/ESTD ESTD 3412 T, ESTD 3412 TA -			HDI220S	HD220S2/CS	SHDI220S-SHD225S
IT IT 12 -			HDI220S	HD220S2/CS	SHDI220S-SHD225S
L/LH/LT L 200 -			HDI143S		SHDI180S
L/LH/LT LT 35, LT 40, LT 44, LT 48, LT 50 -			HDI220S	HD220S2/CS	SHDI220S-SHD225S
RG/RT/RW RW 80, RW 110, RW 140 -			HDI110S		SHDI140S
SM/SMV SM 460 -			HDI110S		SHDI140S
SM/SMV SM 940, SM 1040, SM 1140, SM 1640, SM 2140 -	ETS60D3N				
SM/SMV SM 3040, SM 4040 -	ETS100D2N	MAG100D			
T/TH/TS TS 80, TV 50, TV 80 -			HDI110S		SHDI140S
U/V U 6, U 8 -			HDI220S	HD220S2/CS	SHDI220S-SHD225S
U/V V 22 -	ETS74DI-ETS74ND	MAG74D			
U/V V 100, V 180 (diesel) -			HDI220S	HD220S2/CS	SHDI220S-SHD225S
U/V V 165 C, V 180 C, V 200 (diesel), V 200 B, V 200 C, V 200 HF -			HDI220S	HD220S2/CS	SHDI220S-SHD225S
U/V V 200 (petrol) -	ETS74DI-ETS74ND	MAG74D			
U/V V 225 (diesel), V 225 B, V 225 C, V 225 HF, V 250 C -			HDI220S	HD220S2/CS	SHDI220S-SHD225S
U/V V 225 (petrol) -	ETS74DI-ETS74ND	MAG74D			

	RUN / ETS / ES	MAGIS	CARGO/WET	CARGO/DRY	CARGO SHD
CATERPILLAR					
U/V V 300, V 300 B, V 300 C, V 300 HF -			HDI220S	HD220S2/CS	SHDI220S-SHD225S
Y/YS/YT Y 20, Y 30 -	ETS74DI-ETS74ND	MAG74D			
Y/YS/YT Y 80, Y 100, Y 110, Y 120 , Y 130, Y 140, Y 150 -			HDI143S		SHDI180S
Y/YS/YT YS 60 PD -			HDI143S		SHDI180S
CIMAS					
Columbus, Compact 25, Consul M -	ETS100D2N	MAG100D			
Protector -	ETS100D2N	MAG100D			
CLAAS					
ARES 546 (556) (566)			HD105D	HD105D2/CS	
ARES 547 (557) (567) (577) (597)			HD105D	HD105D2/CS	
ARES 557 ATZ -			246850HD	HD110D2/CS	
ARES 617 (657)			HD105D	HD105D2/CS	
ARES 616 (656) (696) RX			HD180S	HD180S2/CS-HD200S2/CS	
ARES 816 (826) (836) RZ			HD180S	HD180S2/CS-HD200S2/CS	
ARES 616, 656, 696 RX, 816, 826, 836 RZ -			HDI143S		SHDI180S
ARION 510 (520) (530) (540)			HD180S	HD180S2/CS-HD200S2/CS	
ARION 510, 520, 530, 540, 610, 620, 630, 640 -			HDI143S		SHDI180S
ARION 610 (620) (630) (640)			HD180S	HD180S2/CS-HD200S2/CS	
ATLES 926 (936) (946)			HD180S	HD180S2/CS-HD200S2/CS	
ATLES 926, 936, 946 -			HDI143S		SHDI180S
AXION 810 (820) (830) (840) (850)			HD180S	HD180S2/CS-HD200S2/CS	
AXION 810, 820, 830, 840, 850 -			HDI143S		SHDI180S
AXOS 330 -			246850HD	HD110D2/CS	
CELTIS 426 (436) (446) (456)			HD105D	HD105D2/CS	
CLASSIC 78, 88, 98, 108			HD120S	HD120S2/CS	
CLASSIC 78, 88, 98, 108 -			HDI110S		SHDI140S
COMMANDOR 112, 114, 115, 116, 228			HD120S	HD120S2/CS	
COMMANDOR 112 CS, 114 CS, 115 CS, 116 CS -			HDI143S		SHDI180S
COMPACT 25, 30	ETS92ND-ETS100D2N	MAG100D			
CONSUL			HD120S	HD120S2/CS	
CORSAIR			HD120S	HD120S2/CS	
COSMOS			HD120S	HD120S2/CS	
DOMINATOR 38, 48, 58	ETS92ND-ETS100D2N	MAG100D			
DOMINATOR 38 S, 48 S -			HDI110S		SHDI140S
DOMINATOR 66, 68, 76, 78, 80			HD120S	HD120S2/CS	
DOMINATOR 85, 86, 88, 96, 98			HD120S	HD120S2/CS	
DOMINATOR 100, 105, 106, 108			HD155S	HD160S2/CS	
DOMINATOR 100, 105, 106, 108, 108 SL, 112, 114, 115, 116 -			HDI143S		SHDI180S
DOMINATOR 112, 114, 115, 116, 218 (Mega)			HD120S	HD120S2/CS	

	RUN / ETS / ES	MAGIS	CARGO/WET	CARGO/DRY	CARGO SHD
CLAAS					
DOMINATOR 114 CS, 116 CS -			HDI143S		SHDI180S
EUROPA D			HD110S-HD120S		SHDI140S
JAGUAR 60, 70, 80, 675, 680, 682, 685			HD110S-HD120S		SHDI140S
JAGUAR 690, 695			HD110S-HD120S		SHDI140S
JAGUAR 830 -			HDI220S	HD220S2/CS	SHDI220S-SHD225S
JAGUAR 850 -			HDI220S	HD220S2/CS	SHDI220S-SHD225S
JAGUAR 860 -			HDI110S		SHDI140S
JAGUAR 870 -			HDI220S	HD220S2/CS	SHDI220S-SHD225S
JAGUAR 890, 900 -			HDI220S	HD220S2/CS	SHDI220S-SHD225S
LEXION 405, 410, 415, 420, 430, 450, 460 (older types) -			HDI110S		SHDI140S
LEXION 480 (older types) -			HDI220S	HD220S2/CS	SHDI220S-SHD225S
LEXION 510, 520, 520 Montana, 530, 530 Montana -			HDI110S		SHDI140S
LEXION 540, 540 C, 550, 550 Montana, 560, 560 Montana, 560 Terra Trac -			HDI220S	HD220S2/CS	SHDI220S-SHD225S
LEXION 570, 570 Montana, 580, 580 Terra Trac -			HDI220S	HD220S2/CS	SHDI220S-SHD225S
LEXION X4 -			HDI220S	HD220S2/CS	SHDI220S-SHD225S
MATADOR Gigant (6 cyl), Standard (4 cyl) -			HDI110S		SHDI140S
MATADOR, MATADOR GIGANT			HD120S	HD120S2/CS	
MAXI			HD120S	HD120S2/CS	
MAXI 88, 98, 108, 118, 228 CS, Other MAXI -			HDI110S		SHDI140S
MEGA 350, 360, 370 -			HDI110S		SHDI140S
MERCATOR 50	ETS92ND-ETS100D2N	MAG100D			
MERCATOR 60, 70, 75			HD120S	HD120S2/CS	
MERCUR			HD120S	HD120S2/CS	
MONTANA 550, 560 -			HDI220S	HD220S2/CS	SHDI220S-SHD225S
NECTIS 227 (237) (247) (257) (267)	ETS100ND				
PROTECTOR			HD120S	HD120S2/CS	
SENATOR			HD120S	HD120S2/CS	
SENATOR 25, 30, 60 -	ETS100D2N	MAG100D			
SENATOR 70, 85, 90, Other SENATOR -			HDI110S		SHDI140S
XERION 781 -			HDI110S		SHDI140S
XERION 3300 (SADDL TRAC)	ETS100D2N-RUN95D				
zzOTHERS Comando -			HDI143S		SHDI180S
zzOTHERS Cougar 789 -			HDI220S	HD220S2/CS	SHDI220S-SHD225S
zzOTHERS Gigant, Mercur, Protector -			HDI110S		SHDI140S
zzOTHERS Ranger 925, 975 -			246850HD	HD110D2/CS	
zzOTHERS SFB, SFM -			HDI110S		SHDI140S
zzOTHERS SP Combine -			246850HD	HD110D2/CS	
zzOTHERS SP Combine (Perkins L4) -			HDI110S		SHDI140S
CLARK EQUIPMENT					
40-85 Series 55, 55 AWS, 65 A, 65 AWS, 65 R (Cummins/Leyland engine) -			246850HD	HD110D2/CS	
40-85 Series 75 (DAF/Leyland engine) -			246850HD	HD110D2/CS	
40-85 Series 75, 75 A (GM/Perkins engine) -			HDI220S	HD220S2/CS	SHDI220S-SHD225S
100-900 Series 125, 125 S (GM/Leyland engine), 160-300 Scraper, 175 (Cummins/GM engine) -			HDI143S		SHDI180S

	RUN / ETS / ES	MAGIS	CARGO/WET	CARGO/DRY	CARGO SHD
CLARK EQUIPMENT					
100-900 Series 210 -			HDI220S	HD220S2/CS	SHDI220S-SHD225S
100-900 Series 243 -			246850HD	HD110D2/CS	
100-900 Series 275 A -			HDI220S	HD220S2/CS	SHDI220S-SHD225S
100-900 Series 275 S, 275 ART, 280 TD (Cummins/ GM engine) -			HDI143S		SHDI180S
100-900 Series 280 -			HDI220S	HD220S2/CS	SHDI220S-SHD225S
100-900 Series 512, 520, 521 Van Carrier -			HDI143S		SHDI180S
C/CH/CKL/CY/CYC C 110 -	ETS100D2N	MAG100D			
C/CH/CKL/CY/CYC C 500-Y60, C 500-Y100, C 500-Y110, C 500-Y155 PD -			HDI143S		SHDI180S
C/CH/CKL/CY/CYC CKL 340 -			HDI220S	HD220S2/CS	SHDI220S-SHD225S
DC/DCY/DW/DY DC 160, DC 300 DAF -			HDI110S		SHDI140S
DC/DCY/DW/DY DCE, DCFY, DPM -	ETS74DI-ETS74ND	MAG74D			
DC/DCY/DW/DY DCY 160-300 DAF -			HDI110S		SHDI140S
DC/DCY/DW/DY DCY 160-300 PD -			HDI143S		SHDI180S
DC/DCY/DW/DY DCY Other types -	ETS100D2N	MAG100D			
DC/DCY/DW/DY DW 60 -			HDI110S		SHDI140S
DC/DCY/DW/DY DY 20 -	ETS74DI-ETS74ND	MAG74D			
GPX GPX 30, GPX 35, GPX 40, GPX 50, GPX 340, GPX 350 -	ETS60D3N				
H H 500-Y20, H 500-Y30 PD, H 500-Y20, H 500-Y30 LPG -	ETS74DI-ETS74ND	MAG74D			
RCF/RCFY RCF 30, RCFY 30 -	ETS74DI-ETS74ND	MAG74D			
RW RW 80, RW 110, RW 140 -			HDI110S		SHDI140S
T/TS/TV TS 80 -			HDI143S		SHDI180S
T/TS/TV TV 50, TV 80 -			HDI110S		SHDI140S
Y/YL/YS Y 20, Y 30 -	ETS74DI-ETS74ND	MAG74D			
Y/YL/YS Y 80 PD -			HDI143S		SHDI180S
zzOTHERS 11 OHT Scraper -			HDI143S		SHDI180S
zzOTHERS GPM -	ETS60D3N				
CLAYSON					
1540, 1550, 1550 Tractor -	ETS74DI-ETS74ND	MAG74D			
8030, 8040, 8052, 8066, 8070, 8080 -	ETS100D2N	MAG100D			
L 350, TF 44, TF 46, all TX -	ETS100D2N	MAG100D			
COLES					
10-50 Series 40 DA, 40 PA, 50 DA, 50 LPG, 50 LEDA -			246850HD	HD110D2/CS	
100-700 Series 100 DA, 100 LPG, 120, 120 D -			246850HD	HD110D2/CS	
zzOTHERS Leda -			246850HD	HD110D2/CS	
COMPAIR					
CA/CR/CV CA 1, CA 1 S, CA 1 SS -			246850HD	HD110D2/CS	
CA/CR/CV CR 140, CR 140 S, CR 140 SS, CR 175, CR 175 S, CR 175 SS -			246850HD	HD110D2/CS	
CA/CR/CV CR 275, CR 275 S, CR 275 SS, CR 400 -			246850HD	HD110D2/CS	

	RUN / ETS / ES	MAGIS	CARGO/WET	CARGO/DRY	CARGO SHD
COMPAIR					
CA/CR/CV CV 120 SS, CV 125, , CV 125 S, CV 140 SS, CV 145 S, CV 145 SS -			246850HD	HD110D2/CS	
CA/CR/CV CV 160, CV 160 S, CV 250, CV 250 S, CV 400 -			246850HD	HD110D2/CS	
SV SV 398 (Leyland engine) -			HDI110S		SHDI140S
T/TA T 20 D, T 25 D, T 36 D -			HDI110S		SHDI140S
T/TA TA 31 D -			HDI110S		SHDI140S
WR WR 85 (Perkins engine) -			246850HD	HD110D2/CS	
WR WR 125, WR 160, WR 175, WR 210, WR 250 -			246850HD	HD110D2/CS	
WR WR 315, WR 380 (Leyland engine) -			HDI110S		SHDI140S
WR WR 600 (Cummins engine) -			246850HD	HD110D2/CS	
DAEWOO					
DH 130 -			HDI110S		SHDI140S
DH 180, DH 200, DH 220 -			HDI143S		SHDI180S
DATSUN					
F 01 (petrol/propane) -	ETS50D4N				
FD 106, FD 107 -			HDI110S		SHDI140S
FG 104, FG 105 T -	ETS50D4N				
QF 01, QF 02, QFG 01 (diesel) -	ETS100D2N	MAG100D			
DAVID BROWN					
770, 880D, 885			HD105D	HD105D2/CS	
990D, 995, 1190			HD105D	HD105D2/CS	
1210, 1212			HD120D	HD120D2/CS	
1270 AK			HD155D	HD160D2/CS	
1290, 1390			HD105D	HD105D2/CS	
1410.1			HD155D	HD160D2/CS	
1490 CS, 4 RM CS, HYSCS			HD155D	HD160D2/CS	
1690 CS, 4 RM CS, HYSCS			HD155D	HD160D2/CS	
DEMAG					
AC 265 Car, AC 265 Crane -			HDI110S		SHDI140S
DF 60 C, DF 110, DF 140 -			HDI110S		SHDI140S
H 30 -			HDI143S		SHDI180S
HC 95 Crane, HC 190-5-75T Crane -			HDI110S		SHDI140S
HC 340 Car -			HDI220S	HD220S2/CS	SHDI220S-SHD225S
HC 340 Crane -			HDI143S		SHDI180S
DEROT TECNOMA					
ACV 80, D 8056, D 8065, D 8065 H, D 8065 HY, D 8080, D 8085 -			246850HD	HD110D2/CS	
DH 2 -			246850HD	HD110D2/CS	
DP -	ETS60D3N				
DS 2, DS 2 H -	ETS100D2N	MAG100D			
DS 22 -			246850HD	HD110D2/CS	

	RUN / ETS / ES	MAGIS	CARGO/WET	CARGO/DRY	CARGO SHD
DEROT TECNOMA					
DTF 60, DTF 65, DTF Super -			246850HD	HD110D2/CS	
H -					
J, P, PU -	ETS100D2N	MAG100D			
S -	ETS50D4N				
TEV 65 -	ETS100D2N	MAG100D	246850HD	HD110D2/CS	
U, U1 -	ETS50D4N				
DERRUPPE					
D 60 P -			246850HD	HD110D2/CS	
D 400 -	ETS100D2N	MAG100D			
DB 4, DB 5 -	ETS100D2N	MAG100D			
RG 400, RG 404 -			246850HD	HD110D2/CS	
DESTA					
BVH 1622, BVHM 1321, BVHM 1622 -	ETS60D3N				
DV 16 A, DV 16 B, DV 20 B -	ETS74DI-ETS74ND	MAG74D			
DV 25, DV 32, DV 35 -			HDI110S		SHDI140S
DVH 1622 -	ETS74DI-ETS74ND	MAG74D			
MV 12, MV 15, MV 16 -	ETS60D3N				
DEUTZ-FAHR					
100-900 Series 100, 105, 106, 110 -			HDI110S		SHDI140S
100-900 Series 118, 120, 130 A, 135 -			HDI143S		SHDI180S
100-900 Series 145 A -			HDI110S		SHDI140S
100-900 Series 150 -			HDI143S		SHDI180S
100-900 Series 265 -			HDI143S		SHDI180S
100-900 Series 307 -			246850HD	HD110D2/CS	
100-900 Series 330 ,360, 410, 430 -	ETS100D2N	MAG100D			
100-900 Series 450 -			246850HD	HD110D2/CS	
100-900 Series 500 -	ETS100D2N	MAG100D			
100-900 Series 510 -			246850HD	HD110D2/CS	
100-900 Series 520, 525, 530 -			246850HD	HD110D2/CS	
100-900 Series 580, 600 -	ETS100D2N	MAG100D			
100-900 Series 600 S -			HDI143S		SHDI180S
100-900 Series 620, 625 -			246850HD	HD110D2/CS	
100-900 Series 660, 680 -	ETS100D2N	MAG100D			
100-900 Series 690 -	ETS100D2N	MAG100D			
100-900 Series 710 -			HDI110S		SHDI140S
100-900 Series 900 S -			HDI143S		SHDI180S
100-900 Series 922, 925, 930, 932, 935, 942, 950, 952, 955, 960, 970, 980 -	ETS100D2N	MAG100D			
1000-9000 Series 1000, 1002, 1032, 1042, 1052, 1080, 1102, 1144 -	ETS100D2N	MAG100D			
1000-9000 Series 1145 -			HDI143S		SHDI180S
1000-9000 Series 1157 -	ETS100D2N	MAG100D			
1000-9000 Series 1160, 1170 -			HDI143S		SHDI180S
1000-9000 Series 1188 H4, 1200, 1202 -	ETS100D2N	MAG100D			

	RUN / ETS / ES	MAGIS	CARGO/WET	CARGO/DRY	CARGO SHD
DEUTZ-FAHR					
1000-9000 Series 1300, 1320, 1322, 1400 -			HDI110S-HD120S		SHDI140S
1000-9000 Series 1450 CWS -			HDI143S		SHDI180S
1000-9000 Series 1600, 1610 H, 1620, 1630 -			HDI110S		SHDI140S
1000-9000 Series 2002 A -	ETS74DI-ETS74ND	MAG74D			
1000-9000 Series 2025, 2055 -			246850HD	HD110D2/CS	
1000-9000 Series 2056, 2254, 2256, 2258, 2264, 2266 -	ETS100D2N	MAG100D			
1000-9000 Series 2385, 2480 (older types) -	ETS100D2N	MAG100D			
1000-9000 Series 2750 -			HDI143S		SHDI180S
1000-9000 Series 3330 -			HDI110S-HD120S		SHDI140S
1000-9000 Series 3360 -			HDI110S-HD120S		SHDI140S
1000-9000 Series 3400 -			HDI143S		SHDI180S
1000-9000 Series 3610, 3630, 3640 -			HDI110S-HD120S		SHDI140S
1000-9000 Series 3650, 3700, 3750, 3890 -			HDI143S		SHDI180S
1000-9000 Series 4005 -			HDI110S		SHDI140S
1000-9000 Series 4006, 4007 -			HDI143S		SHDI180S
1000-9000 Series 4056, 4060, 4065, 4065 HTS, 4070, 4070 HTS, 4075, 4080, 4080 HTS, 4090 -			HDI110S-HD120S		SHDI140S
1000-9000 Series 4505 -			HDI110S-HD120S		SHDI140S
1000-9000 Series 4506, 5005 -			HDI143S		SHDI180S
1000-9000 Series 5207 -			HDI110S-HD120S		SHDI140S
1000-9000 Series 5207 D, 5207 C -	ETS74DI-ETS74ND	MAG74D			
1000-9000 Series 5506 -			HDI110S-HD120S		SHDI140S
1000-9000 Series 5585 HT, 5600, 5650 H, 5660 H, 5660 HT, 5660 HTS, 5665 HT, 5665 HTS -			HDI143S-HD155S		SHDI180S
1000-9000 Series 5690 H, 5690 HT, 5690 HTS, 5695 HT, 5695 HTS -			HDI143S-HD155S		SHDI180S
1000-9000 Series 6006 -			HDI143S-HD155S		SHDI180S
1000-9000 Series 6206, 6207, 6507, 6800 -			HDI110S-HD120S		SHDI140S
1000-9000 Series 7206 -			HDI143S-HD155S		SHDI180S
1000-9000 Series 7207 C -			HDI110S-HD120S		SHDI140S
1000-9000 Series 7506 -			HDI143S-HD155S		SHDI180S
1000-9000 Series 7807, 7807 C -			HDI143S-HD155S		SHDI140S
1000-9000 Series 8005, 8100 -			HDI143S-HD155S		SHDI180S
10000 Series 13006 D, 13006 A, 13006 D, 16006 -			HDI143S-HD155S		SHDI180S
AGROCOMPACT F60, F70, F80, F90, F100	ETS92ND-ETS100D2N	MAG100D			
AGROKID 3.25 HYDRO	ETS74ND-ETS74DI				
AGROKID 4.35, 4.45	ETS74ND-ETS74DI				
AGROKID 210 (220) (230)	ETS74ND-ETS74DI				
AGROLUX 60 DT, 70 DT	ETS100ND				
AGROLUX 57 (67)	ETS100ND				
AGROLUX F 57 (67)	ETS100ND				
AGROFARM 85 (100)	RUN95D-ETS100D2N				
AGROFARM 410 GS, 410 LS, 420 GS, 420 LS, 430 GS -			HDI143S		SHDI180S
AGROKID 3-25, 3-25 Hydro, 4-35, 4-45 -	ETS74DI-ETS74ND	MAG74D			
AGROKID 210, 220, 230 -	ETS74DI-ETS74ND	MAG74D			
AGROPLUS 60	ETS100ND				
AGROPLUS F 70, F 75, F 90, F 100 -	ETS100D2N	MAG100D			

	RUN / ETS / ES	MAGIS	CARGO/WET	CARGO/DRY	CARGO SHD
DEUTZ-FAHR					
AGROPLUS S 70, S 75, S 90, S 100 -	ETS100D2N	MAG100D			
AGROPLUS 75 (85) (95)			HD120D	HD120D2/CS	
AGROPLUS 85 T -			HDI110S		SHDI140S
AGROPLUS 95 DT -			HDI110S		SHDI140S
AGROPLUS 100			HD155D	HD160D2/CS	
AGROPLUS F 70 (75) (90) (100)	RUN95D				
AGROPLUS S 70 (75) (90) (100)	RUN95D				
AGROPRIMA 4-31, 4-51, 4-56, 6-06, 6-16 -			HDI110S-HD120S		SHDI140S
AGROSTAR 3.57, 4.07, 4.17, 4.61, 4.68, 4.71, 4.78			HDI110S-HD120S		SHDI140S
AGROSTAR 4-58 -			HDI143S		SHDI180S
AGROSTAR 6.08, 6.11, 6.21, 6.28, 6.31, 6.38			HD120S	HD120S2/CS	
AGROSTAR 6.61, 6.71, 6.81, 8.31			HD120S	HD120S2/CS	
AGROSUN			HD120D	HD120D2/CS	
AGROTRON 85-III, 90-III, 100-III, 105-III, 115-III -			HDI110S		SHDI140S
AGROTRON 135, 150, 150 Euro II, 150 Profile, 165, 165-7, 165-7 PL -			HDI143S		SHDI180S
AGROTRON 215, 230, 260, 265 -			HDI143S-HD155S		SHDI180S
AGROTRON 1130, 1145, 1160 -			HDI143S		SHDI180S
AGROTRON K90 (K100) (K110) (K120)			HD155D	HD160D2/CS	
AGROTRON TTV 1130 (1145) (1160) '07→			HD180S	HD180S2/CS-HD200S2/CS	
AGROTRON X 710 (X 720)			HD180S	HD180S2/CS-HD200S2/CS	
AGROXTRA 4.57			HD120S	HD120S2/CS	
AGROXTRA 6.07, 6.17			HD155S	HD160S2/CS	
D 25, 30, 270			HD120S	HD120S2/CS	
D 40S			HD200S	HD220S2/CS	SHDI220S-SHD225S
D 400, 540			HD200S-HDI220S	HD220S2/CS	SHDI220S-SHD225S
D 4005/6			HD120S	HD120S2/CS	
D 5006			HD120S	HD120S2/CS	
D 10006 A, D 13006, D 13006 A			HDI143S		SHDI180S
D 16006			HDI110S		SHDI140S
D 2505, D 2506, D 2807, D 3005, D 3006, D 3607	ETS100D2N	MAG100D			
D 4005, D 4006 (newer types)			HDI110S		SHDI140S
D 4006 A, D 4007 (older types)	ETS74DI-ETS74ND	MAG74D			
D 4007 (newer types)			HDI110S		SHDI140S
D 4505, D 4506, D 4507, D 4807	ETS74DI-ETS74ND	MAG74D			
D 5005, D 5006 (newer types)			HDI110S		SHDI140S
D 5006, D 5006 A , D 5007, D 5206 (older types)	ETS100D2N	MAG100D			
D 5206 (newer types)			HDI110S		SHDI140S
D 5506, D 6005, D 6006, D 6007, D 6007 C, D 6206, D 6207, D 6507			HDI110S		SHDI140S
D 6507 C, D 7806 C, D 6806, D 6807, D 6807 C, D 7006, D 7006 A, D 7007			HDI110S		SHDI140S
D 7006, 8006			HD120S	HD120S2/CS	
D 7206, D 7207, D 7207 C			HDI110S		SHDI140S
D 7506			HDI143S		SHDI180S
D 7806 C, D 7807 C			HDI110S		SHDI140S
D 7807, D 7807 D			HDI143S		SHDI180S

	RUN / ETS / ES	MAGIS	CARGO/WET	CARGO/DRY	CARGO SHD
DEUTZ-FAHR					
D 8005, D 8006, D 8006 A, D 9005, D 9006, D 10006			HDI110S		SHDI140S
DX 3.10 , 3.50, 3.90	ETS92ND				
DX 3.70			HD120S	HD120S2/CS	
DX 4.30, 4.31, 4.50, 4.51, 4.61, 4.70			HD120S	HD120S2/CS	
DX 4.71, 6.05, 6.10, 6.11, 6.30			HD120S	HD120S2/CS	
DX 6.31, 6.50, 6.61, 7.10			HD155S	HD160S2/CS	
DX 8.30			HD120S	HD120S2/CS	
DX 36			HDI110S-HD120S		SHDI140S
DX 50, 80, 85, 86, 90, 92, 100, 110, 120, 140, 145			HDI110S-HD120S		SHDI140S
DX 250			HDI110S-HD120S		SHDI140S
DX 130, DX 140, DX 145, DX 160, DX 230, DX 230 A, DX 250			HDI110S		SHDI140S
DX 270	ETS74DI-ETS74ND	MAG74D			
DX 350	ETS100D2N	MAG100D			
DX 360, DX 365			HDI110S		SHDI140S
DX 380, DX 380 F, DX 390 S	ETS100D2N	MAG100D			
DX 390, DX 417, DX 450, DX 451, DX 470, DX 471			HDI110S		SHDI140S
DX 3500 V, DX 3700 F, DX 3700 FA	ETS74DI-ETS74ND	MAG74D			
DX 2-30, DX 2-50, DX 2-70, Other DX2	ETS74DI-ETS74ND	MAG74D			
DX 3-10, DX 3-30, DX 3-30 V, DX 3-50, DX 3-50 V	ETS100D2N	MAG100D			
DX 3-50 F, DX 3-50 S, DX 3-60, DX 3-65, DX 3-70			HDI110S		SHDI140S
DX 3-70 F, DX 3-70 FA	ETS100D2N	MAG100D			
DX 3-80, DX 3-80 F	ETS74DI-ETS74ND	MAG74D			
DX 3-90			HDI110S		SHDI140S
DX 3-90 F, DX 3-90 S, Other DX3	ETS100D2N	MAG100D			
DX 4 Other types	ETS100D2N	MAG100D			
DX 4-07, DX 4-10, DX 4-17, DX 4-20, DX 4-30, DX 4-31, DX 4-50			HDI110S		SHDI140S
DX 4-51			HDI143S		SHDI180S
DX 4-56, DX 4-57			HDI110S		SHDI140S
DX 4-61	ETS74DI-ETS74ND	MAG74D			
DX 4-70			HDI110S		SHDI140S
DX 4-71			HDI143S		SHDI180S
DX 4-90			HDI110S		SHDI140S
DX 6-05, DX 6-07, DX 6-10			HDI110S		SHDI140S
DX 6-11			HDI143S		SHDI180S
DX 6-16, DX 6-17, DX 6-30			HDI110S		SHDI140S
DX 6-31, DX 6-50, DX 6-61, DX 6-70, DX 6-71, DX 6-81			HDI143S		SHDI180S
DX 7-10			HDI143S		SHDI180S
DX 8-30			HDI110S		SHDI140S
INTRAC 2002, A	ETS92ND				
INTRAC 2003, 2004			HD120S	HD120S2/CS	
M33.60, M34.80, M35.40, M35.78			HD120S	HD120S2/CS	
SFH.300, 410, 3008, 4000			HD120S	HD120S2/CS	
M 40, M 44, M 60, M 66	ETS100D2N	MAG100D			
M 66 S			HDI110S		SHDI140S

	RUN / ETS / ES	MAGIS	CARGO/WET	CARGO/DRY	CARGO SHD
DEUTZ-FAHR					
M 88, M 88 H, M 88 S			HDI110S		SHDI140S
M 182			HDI143S		SHDI180S
M 270 H			HDI110S		SHDI140S
M 390			HDI143S		SHDI180S
M 600, M 660, M 750, M 770, M 900, M 922	ETS100D2N	MAG100D			
M 940, M 980			HDI110S		SHDI140S
M 1000			HDI110S		SHDI140S
M 1002, M 1080, M1102	ETS100D2N	MAG100D			
M 1200			HDI110S		SHDI140S
M 1202	ETS74DI-ETS74ND	MAG74D			
M 1250, M 1300	ETS100D2N	MAG100D			
M 1630, M 1630 Hydromat, M 2385			HDI110S		SHDI140S
M 3360, M 3370, M 3380			HDI110S		SHDI140S
M 3480, M 3540 (newer types)			HDI110S		SHDI140S
M 3480, M 3540 (older types)	ETS100D2N	MAG100D			
M 3580, M 3610, M 3630 (newer types)			HDI110S		SHDI140S
M 3580, M 3610, M 3630 (older types)	ETS100D2N	MAG100D			
M 3900			HDI143S		SHDI180S
SHF 300, SHF 410, SHF 3008, SHF 4000			HDI110S		SHDI140S
Agromash 270 T			HDI143S		SHDI180S
H 6500, H 8100, MX 300			HDI143S		SHDI180S
TC 54, TC 56	ETS100D2N	MAG100D			
X 100 Rubin			HDI110S		SHDI140S
DUTRA					
D 4 K			HDI110S		SHDI140S
D 4 KB			HDI143S		SHDI180S
DYNAPAC					
C 421 , C 501			HDI143S		SHDI180S
CA 15, CA 25, CA 30, CA 51, CA 151, CA 251, CA 301, CA 511, CA 551			HDI143S		SHDI180S
CC 20			246850HD	HD110D2/CS	
CC 21, CC 30			HDI143S		SHDI180S
CC 41, CC 42			HDI143S		SHDI180S
CC 121, CC 211 C			HDI143S		SHDI180S
CG 11, CG 12			246850HD	HD110D2/CS	
LG 300	ETS50D4N				
LP 850 P	ETS50D4N				
EBRO					
350, 460, 470			246850HD	HD110D2/CS	
6040, 6040 V			246850HD	HD110D2/CS	
6100, 6120, 6125 (newer types)			HDI110S		SHDI140S
A 21 L, A 30	ETS74DI-ETS74ND	MAG74D			

	RUN / ETS / ES	MAGIS	CARGO/WET	CARGO/DRY	CARGO SHD
EICHER					
330, 334, 342, 352, 353, 365, 530, 534, 542, 550	ETS74DI-ETS74ND	MAG74D			
635, 642, 642 Turbo, 645, 648, 656, 656 Turbo, 666 Turbo V	ETS74DI-ETS74ND	MAG74D			
756, 766, 780			HDI110S		SHDI140S
3014			HDI220S	HD220S2/CS	SHDI220S-SHD225S
3021, 3022, 3024			HDI143S		SHDI180S
3035, 3042	ETS74DI-ETS74ND	MAG74D			
3048, 3056, 3066	ETS100D2N	MAG100D			
3084	ETS74DI-ETS74ND	MAG74D			
3105, 3118, 3125, 3133, 3145			HDI143S		SHDI180S
3151	ETS74DI-ETS74ND	MAG74D			
3153-3253-3353					
3155	ETS100D2N	MAG100D			
3253, 3254			HDI110S		SHDI140S
3255, 3256	ETS100D2N	MAG100D			
3350			246850HD	HD110D2/CS	
3355, 3356, 3453, 3455	ETS100D2N	MAG100D			
3555, 3556, 3655, 3656, 3704, 3705, 3706, 3711			HDI110S		SHDI140S
3704-77, 3705-77, 3706-77, 3709-77, 3711-77	ETS100D2N	MAG100D			
3712-77, 3713-77, 3714-77	ETS100D2N	MAG100D			
3717, 3719, 3720, 3721, 3722	ETS100D2N	MAG100D			
3723, 3724, 3725 PS			HDI110S		SHDI140S
3725 S, 3726 S	ETS100D2N	MAG100D			
3726 PS, 3727, 3728 PS			HDI110S		SHDI140S
4038, 4048, 4048 Turbo, 4060, 4066	ETS100D2N	MAG100D			
3011, 3012, 3019, 3020			HDI110S		SHDI140S
3353, 3354			246850HD	HD110D2/CS	
3423, 3423 HS, 3453, 3453 HS, 3551	ETS74DI-ETS74ND	MAG74D			
3423, 3423 HS, 3453, 3453 HS, 3551	ETS74DI-ETS74ND	MAG74D			
ES 200, ES 201, ES 202, ES 400, ES 400 (narrow)	ETS100D2N	MAG100D			
ES 3008, ES 3009, ES 3153			246850HD	HD110D2/CS	
3015, 3016	ETS74DI-ETS74ND	MAG74D			
3153			246850HD	HD110D2/CS	
3251	ETS74DI-ETS74ND	MAG74D			
3253, 3254			246850HD	HD110D2/CS	
EA 400, EM 200, EM 200 B, EM 235	ETS100D2N	MAG100D			
ES 3153			246850HD	HD110D2/CS	
FM 200	ETS74DI-ETS74ND	MAG74D			
3253, 3254			246850HD	HD110D2/CS	
3015, 3016, 3251			HDI110S		SHDI140S
Leopard EM 200, EM 201-702, EM 295, ES 200	ETS100D2N	MAG100D			
Panthere 295, 295 K	ETS100D2N	MAG100D			
ENERGIC					
4 RM 1035	ETS100D2N	MAG100D			
145, 260, 580, 665	ETS100D2N	MAG100D			
503, 560, 510, 519, 520, 525	ETS100D2N	MAG100D			
545, 560, 645	ETS100D2N	MAG100D			

	RUN / ETS / ES	MAGIS	CARGO/WET	CARGO/DRY	CARGO SHD
EUCLID					
14 YD			HDI143S		SHDI180S
15, 18 YD, 22, 24 YD, 25, 42, 46 YD, 60			HDI220S	HD220S2/CS	SHDI220S-SHD225S
46 D			HDI220S	HD220S2/CS	SHDI220S-SHD225S
65 T Dumper			246850HD	HD110D2/CS	
R 32 C, R 36			HDI143S		SHDI180S
FAI					
750, 900, 1000, 1100, 1300, 1600			HD155D	HD160D2/CS	
ESCAVATORI 900 CH, GTH			HD155D	HD160D2/CS	
ESCAVATORI 1000 CH, 1000 GTH	ETS100ND				
ESCAVATORI 1100 GTV, 1300 CH, 1600 C	ETS100ND				
MINIESCAVATORI FAI 212, 222, 235, 240	ES70540S				
PALA ARTICOLATA 555, 556			HD120D	HD120D2/CS	
PALA ARTICOLATA 575, 585, 590, 595			HD155D	HD160D2/CS	
PANDA 320B, 330B	ES70540S				
Panda 320, 330, 335, 338	ETS74DI-ETS74ND	MAG74D			
Panda 340, 350			HDI110S		SHDI140S
PANDA 380 SC			HD120D	HD120D2/CS	
TERNE 67C, 87D, 87DT, 90B, 90E			HD155D	HD160D2/CS	
TERNE 96D, 96DT, 96E 266D			HD155D	HD160D2/CS	
TERNE 100D, 100DT, 264D			HD155D	HD160D2/CS	
FENDT					
200, 201, 203, 204, 205, 240	ETS92ND-ETS100D2N	MAG100D			
250, 260, 270, 275, 280, 304	ETS92ND-ETS100D2N	MAG100D			
300 CI	ETS92ND-ETS100D2N	MAG100D			
307	ETS92ND-ETS100D2N	MAG100D			
307 Ci , 308 Ci ('07→)	ETS100D2N-RUN95D				
309 Vario, 310 Vario, 311 Vario, 312 Vario ('07→)	ETS100D2N-RUN95D				
411 Vario, 412 Vario, 413 Vario, 414 Vario,	ETS100D2N-RUN95D				
415 Vario ('07→)	ETS100D2N-RUN95D				
711 (712) (714) (716) VARIO			HDI143S-HD180S		SHDI180S
712 Vario, 714 Vario, 716 Vario, 718 Vario ('07→)			HDI143S-HD180S		SHDI180S
815 (817) (818) VARIO			HDI143S-HD180S		SHDI180S
818 Vario, 820 Vario ('07→)			HDI143S-HD180S		SHDI180S
922 Vario, 924 Vario, 927 Vario, 930 Vario, 933 Vario, 936 Vario ('07→)			HDI143S-HD180S		SHDI180S
F 108 LS, LSDT, SDT	ETS92ND-ETS100D2N	MAG100D			
F 200 S, SDT, V, VDT	ETS74ND-ETS74DI				
F 203 P, PDT, V, VDT	ETS92ND-ETS100D2N	MAG100D			
F 204 PDT	ETS92ND-ETS100D2N	MAG100D			
F 231 G	ETS74ND-ETS74DI				
F 250 GF, 255 GT, 275 GT, 380 GT	ETS92ND-ETS100D2N	MAG100D			
F 370 GT	ETS92ND-ETS100D2N	MAG100D			
F 380 GTA	ETS92ND-ETS100D2N	MAG100D			
FARMER 1	ETS92ND-ETS100D2N	MAG100D			
FARMER 1D, 1E, 2N, 2S	ETS74ND-ETS74DI				

	RUN / ETS / ES	MAGIS	CARGO/WET	CARGO/DRY	CARGO SHD
FENDT					
FARMER 2 D, DE, E	ETS92ND-ETS100D2N	MAG100D			
FARMER 3S, 4S, 5S	ETS92ND-ETS100D2N	MAG100D			
FARMER 25, 102	ETS92ND-ETS100D2N	MAG100D			
FARMER 102S, 103S, 104S, 105S, 106S	ETS92ND-ETS100D2N	MAG100D			
FARMER 204	ETS92ND-ETS100D2N	MAG100D			
FARMER 200 S, 250 S, 260 S, 280 S	ETS92ND-ETS100D2N	MAG100D			
FARMER 250 V, 260 V, 270 V, 280 V	ETS92ND-ETS100D2N	MAG100D			
FARMER 280 P	ETS92ND-ETS100D2N	MAG100D			
FARMER 303, 304	ETS92ND-ETS100D2N	MAG100D			
FARMER 307 C, 308 C, 309 C	ETS92ND-ETS100D2N	MAG100D			
FARMER VARIO 409, 410, 411 , 412	ETS92ND-ETS100D2N	MAG100D			
FAVORIT 3S, 4S	ETS92ND-ETS100D2N	MAG100D			
FAVORIT 4, 10, 11, 12	ETS74ND-ETS74DI				
FAVORIT 816, 818, 822, 824	ETS92ND-ETS100D2N	MAG100D			
FAVORIT 916 (920) (924) (926) VARIO	ETS92ND-ETS100D2N	MAG100D			
GT 115, 220, 230, 225, 231, 250	ETS92ND-ETS100D2N	MAG100D			
GT 345, 360, 365, 380	ETS92ND-ETS100D2N	MAG100D			
XYLON 520, 522, 524	ETS74ND-ETS74DI				
FENWICK					
D 6 P			HDI143S		SHDI180S
DF 3 P			HDI220S	HD220S2/CS	SHDI220S-SHD225S
HD 12, HD 15, HD 20, HD 25, HD 30	ETS100D2N	MAG100D			
HG 12, HG 15	ETS50D4N				
HG 20, HG 25, HG 30, HG 35, HG 40, HG 45	ETS60D3N				
1,5Ton			246850HD	HD110D2/CS	
GPL (1,5Ton), JG, TJG, KFG, ML	ETS74DI-ETS74ND	MAG74D			
JH (petrol)	ETS60D3N				
JN 99, JND, SD 3 (diesel)	ETS100D2N	MAG100D			
2,5Ton (diesel)			246850HD	HD110D2/CS	
2,5Ton, GPL (petrol)	ETS74DI-ETS74ND	MAG74D			
JDI, J 107, TJDI, TJ 107	ETS100D2N	MAG100D			
LOC			246850HD	HD110D2/CS	
FERGUSON					
6300			246850HD	HD110D2/CS	
EL 70, EL 70 C			246850HD	HD110D2/CS	
GM 410, GM 411			HDI110S		SHDI140S
GM 616, GM 616 B, GM 642			246850HD	HD110D2/CS	
FERRARI SPA					
COBRAM 40 AR, RS (Mono) (Rev)	ES70540S				
COBRAM 50 AR, RS (Mono) (Rev)	ES70540S				
MOTOAGRICOLE 1.1, 1.2	ETS74ND-ETS74DI				
MOTOCOLTIVATORE 72, 72S, 74, 75, 75RS, 76, 92/2, 95/33, T72	ETS40NS				
RAPTOR 30 (40) DT	ES45330D				

	RUN / ETS / ES	MAGIS	CARGO/WET	CARGO/DRY	CARGO SHD
FERRARI SPA					
SYSTEM 55 AR, RS (Mono) (Rev)	ETS100ND				
SYSTEM 75 AR, RS (Mono) (Rev)	ETS100ND				
SYSTEM 75 FR, MT (Rev)	ETS100ND				
SYSTEM 80 AR, RS (Mono) (Rev)	ETS100ND				
SYSTEM 80 FR, MT (Rev)	ETS100ND				
THOR 70 (90) AR Mono	ETS100ND				
THOR 870 AR Mono	ETS100ND				
TRATTORE 18.3, 22.3W, 30.4, 75, 75DVA, 75RD, 85, 86, 86RS, 94TR, 95RS, T93	ETS40NS				
TRATTORINI 95, 95 RS, 96	ETS74ND-ETS74DI				
VIPAR 30 AR, RS (Mono)	ES45330D				
VIPAR 40 AR, RS (Mono)	ES45330D				
FIAT AGRI					
35.66	ETS92ND				
45.66	ETS92ND				
55.46, 55.65, 55.66, 55.76	ETS92ND				
60.66	ETS92ND				
65.66, 65.88, 65.90, 65.94	ETS92ND				
70.65, 70.66, 70.86, 70.88, 70.90	ETS92ND				
80 R			HD155D	HD160D2/CS	
80.66			HD132D		
80.65, 80.76, 80.88, 80.90, 82.86	ETS92ND				
85.90, 88.94, 90.90	ETS92ND				
90.90 DT			HD132D		
96.30	ETS92ND				
100/90 DT, 115/80 DT			HD132D		
115.90	ETS92ND				
125, 130			HD155D	HD160D2/CS	
130.90			HD132D		
160.90 DT, 180.90			HD180D	HD180D2/CS	
250, 300, 300 DT, 350, 350 DT, 355	ETS100ND				
420 DT	ETS92ND				
446			HD132D		
450 various models			HD120D	HD120D2/CS	
455			HD120D	HD120D2/CS	
455 C			HD132D		
460, 470	ETS92ND				
480, DT			HD120D	HD120D2/CS	
500, 500 DT, 505 C			HD132D		
505, 570	ETS92ND				
540, DT			HD132D		
550, 555			HD155D	HD160D2/CS	
580			HD132D		
600, DT			HD155D	HD160D2/CS	
605 C			HD132D		
605, 640	ETS92ND				

	RUN / ETS / ES	MAGIS	CARGO/WET	CARGO/DRY	CARGO SHD
FIAT AGRI					
615, DT			HD155D	HD160D2/CS	
640 DT			HD132D		
650, 655			HD155D	HD160D2/CS	
670	ETS92ND				
680, DT			HD132D		
780	ETS92ND				
800			HD155D	HD160D2/CS	
805	ETS92ND				
850			HD155D	HD160D2/CS	
850 DT			HD132D		
880	ETS92ND				
980 DT			HD132D		
980, 1000, 1000 DT			HD155D	HD160D2/CS	
1180			HD132D		
1300 SUPER			HD200S	HD220S2/CS	SHDI220S-SHD225S
1300, DT			HD155D	HD160D2/CS	
1380			HD132D		
1580 DT, 1880			HD180D	HD180D2/CS	
F 100			HD120S	HD120S2/CS	
F 110, 120, 130			HD132D		
L 521, 624			HD155S	HD160S2/CS	
MX 240, 300			HD155S	HD160S2/CS	
SUPER 500, 880			HD132D		
TRATTORINI 95, 96 RS	ETS100ND				
FIAT ALLIS					
7 D	ETS100ND				
10 B, 14 B			HD155D	HD160D2/CS	
31, 41 B			HDI220S	HD220S2/CS	SHDI220S-SHD225S
65 B	ETS100ND				
945 B			HDI220S	HD220S2/CS	SHDI220S-SHD225S
A4 D			HD120D	HD120D2/CS	
AD 5, 7			HD120D	HD120D2/CS	
AD 8	ETS100ND				
AD 9			HD120D	HD120D2/CS	
BD 7			HD120D	HD120D2/CS	
BD 8	ETS100ND				
BD 9			HD120D	HD120D2/CS	
BD 14 C, BD 20			HDI220S	HD220S2/CS	SHDI220S-SHD225S
BD 20			HD200S	HD220S2/CS	SHDI220S-SHD225S
BT 30			HDI220S	HD220S2/CS	SHDI220S-SHD225S
BTL 12 D, BTL 14, BTL 14 D, BTL 16, BTL 16 D			246850HD	HD110D2/CS	
BTL 20			HDI143S		SHDI180S
BTL 30			HDI220S	HD220S2/CS	SHDI220S-SHD225S
FA 120	ETS100ND				
FB 7	ETS100ND				
FBL 4M	ETS60D3N				

	RUN / ETS / ES	MAGIS	CARGO/WET	CARGO/DRY	CARGO SHD
FIAT ALLIS					
FD 5	ETS74DI-ETS74ND	MAG74D			
FD 7, 9	ETS100ND				
FD 14			HD155D	HD160D2/CS	
FD 20			HD180D	HD180D2/CS	
FE 12, R	ES70540S				
FE 14, 16, 18	ETS100ND				
FE 20			HD180D	HD180D2/CS	
FE 28			HD155D	HD160D2/CS	
FL 4 L, M			246850HD	HD110D2/CS	
FL 4, C, D			HD120D	HD120D2/CS	
FL 5, 6, 7	ETS100ND				
FL 7 C			HD120D	HD120D2/CS	
FL 8 C			HD132D		
FL 9	ETS100ND		246850HD	HD110D2/CS	
FL 10 B, C			HD155D	HD160D2/CS	
FL 14 B, C, D			HD155D	HD160D2/CS	
FL 20			HD180D	HD180D2/CS	
FR 7	ES70540S				
FR 10, 12	ETS100ND		246850HD	HD110D2/CS	
FR 15			HD155D	HD160D2/CS	
FR 15 B	ETS74DI-ETS74ND	MAG74D			
FR 20, FR 20 B, FR 35, FR 130	ETS100ND-ETS100D2N				
HD/6			HD155D	HD160D2/CS	
S 9	ETS100ND				
S 11			HD120D	HD120D2/CS	
S 15 B			HD155D	HD160D2/CS	
S 60	ETS100ND				
S 90, 105			HD120D	HD120D2/CS	
SL 9	ETS100ND				
SL 11			HD120D	HD120D2/CS	
SR 9	ETS100ND				
SR 70			HD120D	HD120D2/CS	
T 44 C, D			HD132D		
T 360, 460			HD200S	HD220S2/CS	SHDI220S-SHD225S
TL 10, 12, 14, 16, 20			HD155D	HD160D2/CS	
TL 30, 40, 160, 260			HD200S-HDI220S	HD220S2/CS	SHDI220S-SHD225S
TL 545, 546, 562, 645			HD200S-HDI220S	HD220S2/CS	SHDI220S-SHD225S
TS 160, 260			HD200S-HDI220S	HD220S2/CS	SHDI220S-SHD225S
TS 360			HDI220S	HD220S2/CS	SHDI220S-SHD225S
FIAT HITACHI					
EX 40 U, EX 50 U	ETS50D4N				
EX 81, EX 83			HDI110S		SHDI140S
EX 103			HDI110S		SHDI140S
EX 143			HDI110S		SHDI140S
EX 165	ETS100D2N	MAG100D			

	RUN / ETS / ES	MAGIS	CARGO/WET	CARGO/DRY	CARGO SHD
FIAT HITACHI					
EX 300			HDI143S		SHDI180S
FH 120, FH 130 W, FH 150, FH 150 LC3, FH 150 W, FH 150 W3	ETS100D2N	MAG100D			
FH 200	ETS100ND				
FH 220			HD155D	HD160D2/CS	
FH 400			HD180D	HD180D2/CS	
UH 2			HDI220S	HD220S2/CS	SHDI220S-SHD225S
UH 4, UH 7, UH 9			HDI110S		SHDI140S
UH 10, UH 14, UH 14-2, UH 20			HDI220S	HD220S2/CS	SHDI220S-SHD225S
UH 30, UH 31			HDI220S	HD220S2/CS	SHDI220S-SHD225S
UH 50			HDI220S	HD220S2/CS	SHDI220S-SHD225S
UH 51, UH 52, UH 61, UH 62			HDI110S		SHDI140S
UH 171			HDI220S	HD220S2/CS	SHDI220S-SHD225S
W 90, W 110, W 130	ETS100D2N	MAG100D			
WH 51 D, WH 73 D			HDI110S		SHDI140S
50			HDI220S	HD220S2/CS	SHDI220S-SHD225S
135 W	ETS100D2N	MAG100D			
HX 99 B	ETS60D3N				
FORD					
30, 40			246850HD	HD110D2/CS	
65 D	ETS100D2N	MAG100D			
90			246850HD	HD110D2/CS	
860			HDI110S		SHDI140S
946			246850HD	HD110D2/CS	
1710	ES100720S				
2000 (gear box)	ETS100D2N	MAG100D			
2205, 2305			HD105D	HD105D2/CS	
2261 E, 2262 E, 2263 E, 2264 E, 2265 E	ETS60D3N				
3230, 3430, 3910, 3930			HD105D	HD105D2/CS	
2502 E, 2503 E, 2504 E	ETS74DI-ETS74ND	MAG74D			
2601 E, 2602 E, 2603 E, 2604 E	ETS60D3N				
3000 (older types)	ETS100D2N	MAG100D			
3435	ETS100D2N	MAG100D			
3600 (older types)	ETS100D2N	MAG100D			
3830	ETS100D2N	MAG100D			
3930			246850HD	HD110D2/CS	
3935	ETS100D2N	MAG100D			
4000, 4100 (petrol)	ETS100D2N	MAG100D			
4130			246850HD	HD110D2/CS	
4135	ETS100D2N	MAG100D			
4630			246850HD	HD110D2/CS	
4830			246850HD	HD110D2/CS	
5010, 5030, 5110 (newer types)			HD105D-246850HD	HD105D2/CS	
5640			246850HD	HD110D2/CS	
6640			HD105D-246850HD	HD105D2/CS	
6640, 7740			HD105D-246850HD	HD105D2/CS	

	RUN / ETS / ES	MAGIS	CARGO/WET	CARGO/DRY	CARGO SHD
FORD					
8260, 8360	ETS60D3N-ETS62ND	MAG62D			
8670			246850HD	HD110D2/CS	
8770			246850HD	HD110D2/CS	
8870, 8970 TS			246850HD	HD110D2/CS	
2000 (6x3), 3000 (6x3), 3000 (6x4), 3600 (6x3)	ETS74DI-ETS74ND	MAG74D			
3000, 4000 (petrol)	ETS74DI-ETS74ND	MAG74D			
DEXTA	ETS100ND				
FW-various models	ETS100ND				
Power Major			246850HD	HD110D2/CS	
SUPER DEXTA	ETS100ND				
TS 90, TS 100, TS 110			246850HD	HD110D2/CS	
Versatile			246850HD	HD110D2/CS	
GOLDONI					
900 serie (→ '97)	ES70540S				
919, 921, 926, 928	ETS74DI-ETS74ND	MAG74D			
3000 (Vigneto) series (→ '97)	ETS100ND				
3050 (S)	ETS63NS				
3050, 3070 (STAR)	ETS63NS				
3445	ETS63NS				
3450, 3460	ETS100ND				
4 RM 3050	ETS74DI-ETS74ND	MAG74D			
ASTER 35, 40	ETS45ND	MAG45D			
ASTER 45	ETS74ND-ETS74DI				
BASE 20 (EVO)	ETS45ND	MAG45D			
C45, C60	ES70540S				
C 55, C 75	ETS74DI-ETS74ND	MAG74D			
CLUSTER 65 (75) RS (SN)	ETS74ND-ETS74DI				
COMPACT TRACTORS	ETS100ND				
EURO serie (→'97)	ES100720S				
EURO 26 (30) RS (EVO)	ETS45ND	MAG45D			
EURO 30 (40) SN	RUN50D				
EURO 42 AW	ETS45ND	MAG45D			
EURO 45 RS (SN EVO) ('07→)	ETS74ND-ETS74DI				
EURO 50 A	ETS45ND	MAG45D			
EURO W 40 RS	RUN50D				
EURO W 45 RS	ETS63NS				
GM 4, 14, 18, 20	ETS45ND	MAG45D			
IDEA 26, 30, 30 HST, 40	ETS45ND	MAG45D			
MAXTER W60 RS(SN), 70 REV (RS)(SN)	ETS63NS				
Mercator 50	ETS100D2N	MAG100D			
STAR 50, 70	ETS63NS				
STAR 65, 75	ETS100ND				
STAR 75, 85, 100 QUADRIFOGLIO	ETS100ND				
STAR 3050 NRG	RUN50D				
STAR 3050 (SL), 3060 LC, 3070 (V) ('07→)	ETS74ND-ETS74DI				
STAR 3070 V (NRG)	ETS63NS				

	RUN / ETS / ES	MAGIS	CARGO/WET	CARGO/DRY	CARGO SHD
GOLDONI					
STAR 4000 QUADRIFOGLIO	ETS100ND				
TRANSCAR serie (→'97)	ES100720S				
TRANSCAR 22RS	ETS45ND	MAG45D			
TRANSCAR 25-W60	ETS63NS				
TRANSCAR 28 SN (RS)	ETS63NS				
TRANSCAR W33, 40, 60, 70 SN (RS)	ETS63NS				
UNIVERSAL 233, 238, 245	ETS100ND				
UNIVERSAL 236, 240	ES70540S				
GRILLO					
BEE FLY	ETS50ND-ETS50D4N				
CLIMBER	ES45330S				
DRAGON	ES70540D				
DUMPER 507	RUN44D-ETS50D4N				
G131	ES45330S				
KING, ROLLY	RUN44D				
24 M	ES70540D				
25 M	ES70540D				
131 TS	ES70540D				
GROVE					
RT 58, RT 59, RT 60, RT 63, RT 65			HDI220S	HD220S2/CS	SHDI220S-SHD225S
TM 750 EN			246850HD	HD110D2/CS	
TMS 300, TMS 475			HDI220S	HD220S2/CS	SHDI220S-SHD225S
GULDNER					
ABN, ABS, ADN, ALD	ETS74DI-ETS74ND	MAG74D			
AF 15, AF 20	ETS74DI-ETS74ND	MAG74D			
G 15, G 25, G30, G 35	ETS74DI-ETS74ND	MAG74D			
G 25 S, G 30 S, G 35 A, G 35 AS, G 35 S, G 40 A, G 40 AS, G 40 S			246850HD	HD110D2/CS	
G 40 W	ETS50D4N				
G 40, G 41, G 45	ETS100D2N	MAG100D			
G 50 A, G 50 AS, G 50 S			246850HD	HD110D2/CS	
G 50, G 60, G 75			HDI110S		SHDI140S
G 394, G 675, G 685, G 4314			HDI110S		SHDI140S
H 3, H 12, H 15, H 20, H 25 (diesel)	ETS100D2N	MAG100D			
H 12, H 15 (petrol)	ETS50D4N				
H 30, H 30 D	ETS74DI-ETS74ND	MAG74D			
H 41, H 45, H 50	ETS100D2N	MAG100D			
D	ETS74DI-ETS74ND	MAG74D			
T 2 KN, T 3 K			246850HD	HD110D2/CS	

	RUN / ETS / ES	MAGIS	CARGO/WET	CARGO/DRY	CARGO SHD
GUTBROD					
1050, 2400, 2600 (diesel)	ETS50D4N				
2800	ETS74DI-ETS74ND	MAG74D			
3000 (diesel)	ETS50D4N				
D 9, D 12	ETS50D4N				
HAKO					
1100, 1200, 1500	ETS50D4N				
1600 D, 1800 D, 1900 D, 2000 D, 2300 D	ETS74DI-ETS74ND	MAG74D			
1600, 1800, 1900, 2000, 2300, 2700	ETS50D4N				
3000, 3500, 3800, 3800 D	ETS100D2N	MAG100D			
4000	ETS50D4N				
4100, 4100 D, 4800 D	ETS74DI-ETS74ND	MAG74D			
8014, 8016	ETS60D3N				
Jonas	ETS74DI-ETS74ND	MAG74D			
HANOMAG					
14 D			HDI220S	HD220S2/CS	SHDI220S-SHD225S
18 C			HDI220S	HD220S2/CS	SHDI220S-SHD225S
22			HDI110S		SHDI140S
22 CI	ETS74DI-ETS74ND	MAG74D			
27			HDI110S		SHDI140S
33 CI	ETS74DI-ETS74ND	MAG74D			
66 C, 77 C			HDI143S		SHDI180S
320, 324, 332			HDI110S		SHDI140S
400 C			246850HD	HD110D2/CS	
600, 601, 700, 701, 900, 901			HDI110S		SHDI140S
960-69 (12L engine)			HDI143S		SHDI180S
6400, 6650			HDI143S		SHDI180S
B 6, B 8 C, B 11 C	ETS74DI-ETS74ND	MAG74D			
B 8, B 11			HDI110S		SHDI140S
B 14 C	ETS74DI-ETS74ND	MAG74D			
B 30 C			HDI220S	HD220S2/CS	SHDI220S-SHD225S
600, 601, 700, 701			HDI110S		SHDI140S
F 45, F 46, F 55, F 65, F 75, F 76, F 85, F 88, F 131, F 141, F 151			HDI143S		SHDI180S
F 162, F 170, F 190, F 191, F 201, F 221, F 222 , F 261, F 320			HDI143S		SHDI180S
GR 8			HDI110S		SHDI140S
H 151, H 161, H 191, H 221, H 261			HDI143S		SHDI180S
HA 15, HA 19			HDI143S		SHDI180S
HS 14, HS 16, HS 22, HS 26, HS 34, HS 165			HDI143S		SHDI180S
K 7, K 7 B, K 8			HDI143S		SHDI180S
K 10			HDI220S	HD220S2/CS	SHDI220S-SHD225S
K 15, K 16			HDI220S	HD220S2/CS	SHDI220S-SHD225S
K 18 C			HDI110S		SHDI140S
K 60			HDI143S		SHDI180S
K 90 E			HDI220S	HD220S2/CS	SHDI220S-SHD225S
K 320			HDI143S		SHDI180S
K 565			HDI220S	HD220S2/CS	SHDI220S-SHD225S

	RUN / ETS / ES	MAGIS	CARGO/WET	CARGO/DRY	CARGO SHD
HANOMAG					
KV 50	ETS100D2N	MAG100D			
300, 400	ETS100D2N	MAG100D			
R 25	ETS100D2N	MAG100D			
R 27			HDI110S		SHDI140S
R 40	ETS100D2N	MAG100D			
R 430, R 440			HDI110S		SHDI140S
800, 900			HDI143S		SHDI180S
900-1			HDI110S		SHDI140S
HEMEK VAMAS					
Ciceron I-ASK, Ciceron II-ASK, Ciceron 89-ASK			246850HD	HD110D2/CS	
EGS			HDI110S		SHDI140S
TD 81, TD 814			HDI110S		SHDI140S
HERRIAU					
All types			HDI143S		SHDI180S
HOLDER					
A 50, A 55	ETS100D2N	MAG100D			
A 55 F	ETS60D3N				
A 60, A 62, A 65, A 440, A 550, A 650, A 660	ETS100D2N	MAG100D			
B 40, B 41, B 50, B 51	ETS100D2N	MAG100D			
C 20, C 30, C 40	ETS60D3N				
C 50, C 65, C 440, C 500, C 560, C 660, C 5000, C 6000	ETS100D2N	MAG100D			
E 14	ETS60D3N				
P 20, P 30, P 50, P 60, P 70	ETS60D3N				
3705	ETS74DI-ETS74ND	MAG74D			
Parc 60	ETS60D3N				
HOUGH					
D 400, D 500			HDI220S	HD220S2/CS	SHDI220S-SHD225S
H 30 E			HDI220S	HD220S2/CS	SHDI220S-SHD225S
H 80 A, H 80 B			HDI110S		SHDI140S
H 400, H 560			HDI220S	HD220S2/CS	SHDI220S-SHD225S
HUDDIG					
760, 860	ETS74DI-ETS74ND	MAG74D			
960, 970, 1160			246850HD	HD110D2/CS	
HÜRLIMANN					
35, 45, 55, 325 XV, 335	ETS74DI-ETS74ND	MAG74D			
435, 435 HD, 445 (older types)	ETS74DI-ETS74ND	MAG74D			
435, 445 (newer types)			HDI143S		SHDI180S
6120			HDI143S		SHDI180S
7000	ETS100D2N	MAG100D			
CLUB -478.4	ETS100ND				
D 115, D 120	ETS100D2N	MAG100D			

	RUN / ETS / ES	MAGIS	CARGO/WET	CARGO/DRY	CARGO SHD
HÜRLIMANN					
D 150 S, D 200 S			246850HD	HD110D2/CS	
D 180, D 310, D 550	ETS100D2N	MAG100D			
DT	ETS100D2N	MAG100D			
H 345, 351, 352	ETS100ND				
H 355 F			HDI110S		SHDI140S
H 356			HD120D	HD120D2/CS	
H 358, 361, 362, 366, 372	ETS100ND				
H 466			HD120D	HD120D2/CS	
H 476 F, H 476 RDT, H 476 XF, H 476-4, H 478, H 481 DT, H 481 XF, H 486 T	ETS100D2N	MAG100D			
H 478 BDT, Other PRESTIGE	ETS100D2N	MAG100D			
H 468/4, 476 (XF), 478, 488	ETS100ND				
H 488			HDI110S		SHDI140S
H 488 T	RUN95D				
H 488 B, H 488 DT, H 488 T	ETS100D2N	MAG100D			
H 490			HDI143S		SHDI180S
H 491 XN	ETS100D2N	MAG100D			
H 496			HD120D	HD120D2/CS	
H 496T			HD155D	HD160D2/CS	
H 4105	ETS92ND				
H 5110, 5116			HD120S	HD120S2/CS	
H 5116T			HD155D	HD160D2/CS	
H 550, H 633 XL, H 796 DT, H 4105	ETS100D2N	MAG100D			
H 5110 T, H 5116 T (older types)			HDI143S		SHDI180S
H 5110, H 5116 (older types)			HDI110S		SHDI140S
H 5650, 5660	ETS100ND				
H 6115, 6135, 6136			HD155D	HD160D2/CS	
H 6165, 6170, 6190			HD155D	HD160D2/CS	
H 6170T			HD180D	HD180D2/CS	
H 6670, 6680, 6690			HD180D	HD180D2/CS	
H 7600			HD120D	HD120D2/CS	
H 7630			HD155D	HD160D2/CS	
H 7650			HD180D	HD180D2/CS	
H 8610, 8613			HD155D	HD160D2/CS	
PRESTIGE H-478 B DT			HD120D	HD120D2/CS	
Prince 35 (45) (55)	ETS74ND-ETS74DI				
PRINCE 325, 325 XV, 335, 435, 435 HD, 445	ETS74ND-ETS74DI				
SX 1200 DT, 1350 DT			HD155D	HD160D2/CS	
SX 1500 DT, 1600 DT, 1800 DT, 2000 DT			HD155D	HD160D2/CS	
T 1400	ETS100D2N	MAG100D			
T 9200	ETS100D2N	MAG100D			
XA 56, 66, 76, 86	ETS100ND				
XA 606, XA 607			HDI143S		SHDI180S
XA 656 Dt	ETS100ND-ETS100D2N				
XA 657 (658) DT	ETS92ND				
XA 658, XA 658 DT, Other XA	ETS100D2N	MAG100D			
XB Max 85 (100)	ETS100ND-ETS100D2N				

	RUN / ETS / ES	MAGIS	CARGO/WET	CARGO/DRY	CARGO SHD
HÜRLIMANN					
XB MAX 85 DT, XB MAX 85 GS, XB MAX 85 LS, XB MAX 85 T			HDI143S		SHDI180S
XB MAX 100	ETS100D2N	MAG100D			
XB MAX 100 GS, XB MAX 100 LS, XB MAX 100 T			HDI143S		SHDI180S
XB MAX 110 GS, XB MAX 110 LS			HDI143S		SHDI180S
XB T/TB 75 (85) (95)	ETS100ND				
XE F Tradition 55 (70)	ETS100ND				
XE H-305 (306) (307) DT	RUN95D				
XE H-355 (365) (375) F	ETS100ND				
XE Tradition 55 (70)	ETS100ND				
XF 70 (75) (90) (100)	RUN95D				
XF H-361 DT	ETS100ND				
XF H-476 R DT	ETS100ND				
XF H-481 (491) DT	ETS100ND				
XL 130 DCR, XL 140 DCR, XL 150, XL 150-7, XL 160 DCR, XL 165-7	HDI143S				SHDI180S
XL 150.7 (165.7) (185.7)	HDI143S		HD180S	HD180S2/CS-HD200S2/CS	SHDI180S
XM 100 (110) (130)	HDI143S		HD155D	HD160D2/CS	SHDI180S
XN 706 (707) (708) (709) DT	RUN95D-ETS100D2N				
XS 70 (75) (90) (100)	RUN95D-ETS100D2N				
XT 85, 95			HD120D	HD120D2/CS	
XT 105, 115, 130			HD155D	HD160D2/CS	
XT 110			HD120D	HD120D2/CS	
XT 908 DT, 909 DT			HD120D-HDI43S	HD120D2/CS	SHDI180S
XT 909, 910.6			HD155D	HD160D2/CS	
XT 910.4 DT			HD120D	HD120D2/CS	
XT 910.6 DT			HD155D	HD160D2/CS	
XT 911 DT, 913 DT			HD155D	HD160D2/CS	
HYDREMA					
580	ETS100D2N	MAG100D			
600			HDI143S		SHDI180S
900	ETS100D2N	MAG100D			
906 B, 908 B, 910			HDI143S		SHDI180S
HYMAS					
H 100			HDI220S	HD220S2/CS	SHDI220S-SHD225S
82 R			HDI143S		SHDI180S
6000			HDI143S		SHDI180S
H 42			HDI143S		SHDI180S
H 62, H 72 (J.Deere engine)			HDI143S		SHDI180S
H 240	ETS100D2N	MAG100D			
HYSTER					
H 30, H 40, H 50			HDI110S		SHDI140S
H 60 (newer diesel types), H 60 F			HDI110S		SHDI140S
H 110 E (newer models)			HDI110S		SHDI140S
H 150			HDI110S		SHDI140S

	RUN / ETS / ES	MAGIS	CARGO/WET	CARGO/DRY	CARGO SHD
HYSTER					
H 165, H 180, H 200			HDI220S	HD220S2/CS	SHDI220S-SHD225S
P 125, P 150, P 165, P 180 A			HDI220S	HD220S2/CS	SHDI220S-SHD225S
S 60, S 70, S 100 (Perkins engine)			HDI143S		SHDI180S
YC (diesel)			246850HD	HD110D2/CS	
Forklifts (Perkins P3 engine), HC	ETS100D2N	MAG100D			
Karry Krane (Perkins P3/P4 engine)			HDI110S		SHDI140S
HYUNDAI					
160	ETS100D2N	MAG100D			
R 450-LC7			HDI220S	HD220S2/CS	SHDI220S-SHD225S
IMT					
109			246850HD	HD110D2/CS	
542 Tractor	ETS60D3N				
549, 569, 577			246850HD	HD110D2/CS	
INGERSOLL RAND					
1010, 2110			246850HD	HD110D2/CS	
DP-DRA 125			HDI110S		SHDI140S
DRA 125	ETS100D2N	MAG100D			
DRGM 600, DRR 365, DRR 600			HDI220S	HD220S2/CS	SHDI220S-SHD225S
GX 45	ETS74DI-ETS74ND	MAG74D			
365, 600			HDI143S		SHDI180S
GYRO-F20	ETS100D2N	MAG100D			
H 480			HDI143S		SHDI180S
JD 544 B, JD 644 B			HDI143S		SHDI180S
JD 544, JD 544 A, JD 644			246850HD	HD110D2/CS	
JD 670, JD 750, JD 770			HDI143S		SHDI180S
MW 6520			HDI143S		SHDI180S
P 85	ETS74DI-ETS74ND	MAG74D			
P 125 W			HDI143S		SHDI180S
P 175 VD, P 250 VD			HDI143S		SHDI180S
T 3093 LD			246850HD	HD110D2/CS	
TP 210			246850HD	HD110D2/CS	
INT. HARVESTER					
323	ETS100ND				
323 V, 353 V	ETS92ND				
383	ETS100ND				
383 V	ETS92ND				
423	ETS100ND				
423 V	ETS92ND				
433	ETS92ND				
453	ETS100ND				
533	ETS92ND				
553, 623 V, 633	ETS92ND				
724, 733, 734, 743	ETS92ND				

	RUN / ETS / ES	MAGIS	CARGO/WET	CARGO/DRY	CARGO SHD
INT. HARVESTER					
745 S, 824, 833	ETS92ND				
946, 956, 1046, 1055	ETS100ND				
1255, 1455 4WD			HD125D	HD125D2/CS	
IRMER & ELSE					
D 341 R, D 341 R9, D 401 R, D 401 R9, D 451 R, D 451 R9	ETS100D2N	MAG100D			
D 661 R, D 661 R9	ETS74DI-ETS74ND	MAG74D			
D 801 R, D 801 R9	ETS100D2N	MAG100D			
D 901 R			HDI220S	HD220S2/CS	SHDI220S-SHD225S
D 1051 S, D 1101 R, D 1802			HDI143S		SHDI180S
S 701, S 701 FLS, S 1051, S 1051 FLS	ETS100D2N	MAG100D			
ISEKI					
351			246850HD	HD110D2/CS	
1910, 3015, 3020, 3025, 3030	ES70540S				
2140, 2160, 3210	ES45330D				
3110			246850HD	HD110D2/CS	
3510			HD105D-246850HD	HD105D2/CS	
4270, 4320, 4370	ES70540S				
5000, 5250, 6000, 6500			HD105D-246850HD	HD105D2/CS	
Multi 50, Multi 50 Transporter	ETS100D2N	MAG100D			
TS 3110, TS 3500 F, TS 3510, TS 4000, TS 4510	ETS100ND		246850HD	HD110D2/CS	
TX1300F, 1500F	ES45330D				
ITMA					
480, 500, 500 L	ETS100D2N	MAG100D			
533			246850HD	HD110D2/CS	
700			246850HD	HD110D2/CS	
3.406	ES70540S				
3.65, 3.85	ETS100ND				
500 L, 600, 700 NL	ETS100ND				
A 35 S	ETS74DI-ETS74ND	MAG74D			
A553NL	ETS100ND				
CRAWLER TRACTORS A500, A503, 500 SNL	ETS100ND				
NIKE 350, L, LL, 401, L, LL	ETS100ND				
JCB					
165			246850HD	HD110D2/CS	
185			246850HD	HD110D2/CS	
403	ETS60D3N				
406			246850HD	HD110D2/CS	
407, 408, 409, 409 CWL, 410, 411			246850HD	HD110D2/CS	
456			246850HD	HD110D2/CS	
525 B, 525 BHL			246850HD	HD110D2/CS	
540, 540 B, 540 BM			246850HD	HD110D2/CS	
714, 718, 722, 726, 801			246850HD	HD110D2/CS	

	RUN / ETS / ES	MAGIS	CARGO/WET	CARGO/DRY	CARGO SHD
JCB					
921, 926, 930			246850HD	HD110D2/CS	
2000, 3000, 7000			246850HD	HD110D2/CS	
520-2, 520-4, 525 B			246850HD	HD110D2/CS	
5050, 5051, 5052, 5053, 5054, 5055			246850HD	HD110D2/CS	
Landlord			HDI143S		
Mini CX (4WD)			246850HD	HD110D2/CS	
Teleagri Plus, Teleforce 58			246850HD	HD110D2/CS	
TM 310			246850HD	HD110D2/CS	
JENBACHER WERKE					
C 120 SES (250kVA), C 160 SES (250kVA)			HDI143S		SHDI180S
C 240 SES (500 kVA), C 320 SES (670kVA)			HDI143S		SHDI180S
JMS 212, JMS 216, JMS 312, JMS 316, JMS 612			HDI143S		SHDI180S
JW 8 ES (6kVA), JW 20 ES (15kVA), JW 25 ES (20 kVA)	ETS74DI-ETS74ND	MAG74D			
JW 40 ES (30kVA), JW 80 ES (125kVA), JW 200 ES (160kVA)			HDI143S		SHDI180S
JW 220 KFL			246850HD	HD110D2/CS	
JW 250	ETS74DI-ETS74ND	MAG74D			
JW 300 ES (250kVA)			HDI143S		SHDI180S
JW 300, JW 320 KF			246850HD	HD110D2/CS	
JW 370	ETS74DI-ETS74ND	MAG74D			
JW 400 ES (350kVA)			HDI143S		SHDI180S
JW 550	ETS74DI-ETS74ND	MAG74D			
JW 600 ES (500kVA), JW 650, JW 750, JW 2000, JW 2800			HDI143S		SHDI180S
LM 1150-3000 GDES, LM 1500 ES (1250kVA), MT 2866, MT 2842			HDI143S		SHDI180S
4T6 SES (800kVA)			HDI143S		SHDI180S
120			HDI143S		SHDI180S
310			HDI143S		SHDI180S
400, 400 A	ETS60D3N				
JOHN DEERE					
30	ETS60D3N				
78			HDI143S		SHDI180S
110, 112, 140	ETS50D4N				
200	ETS74DI-ETS74ND	MAG74D			
210	ETS74DI-ETS74ND	MAG74D			
212, 300, 303, 316, 317	ETS50D4N				
400	ETS50D4N				
450			246850HD	HD110D2/CS	
455 (older types)	ETS60D3N				
510			HDI143S		SHDI180S
530	ETS100D2N	MAG100D			
630			HDI110S		SHDI140S
631 B	ETS100D2N	MAG100D			
650, 750	ES70540S				
730			HDI110S		SHDI140S

	RUN / ETS / ES	MAGIS	CARGO/WET	CARGO/DRY	CARGO SHD
JOHN DEERE					
820, 830, 840, 855, 856, 920	ETS60D3N				
920, 930, 935, 940, 940 XE, 945 (newer types)	ETS60D3N				
930, 940, 1040	ETS100D2N	MAG100D			
950, 952 (newer types)	ETS100D2N	MAG100D			
955, 960, 965 (older types)	ETS100D2N	MAG100D			
975, 985			HD120S	HD120S2/CS	
995	ETS100D2N	MAG100D			
1010 (diesel)			246850HD	HD110D2/CS	
1020, 1020 A, 1030	ETS60D3N				
1032	ETS100D2N	MAG100D			
1040	ETS50D4N				
1042, 1052, 1055	ETS100D2N	MAG100D			
1068H, 1177/ YESI	ETS92ND				
1085, 1085 HY4	ETS100D2N	MAG100D			
1116, 1118, 1130, 1140, 1177	ETS45ND	MAG45D			
1640, 1750, 2030, 2040, 2130, 2140	ETS45ND-ETS60D3N	MAG45D-MAG62D			
2155	ETS62ND-ETS74DI	MAG74D			
2250, 2450, 2850	ETS45ND-ETS60D3N	MAG45D-MAG62D			
2254, 2256, 2258, 2264, 2266 (newer types)	ETS100D2N	MAG100D			
2254, 2256, 2258, 2264, 2266 (older types), 2266 E			HDI143S		SHDI180S
2270, 2280			HDI110S		SHDI140S
2345, 2345 F, 2355, 2355 N, 2450	ETS62ND-ETS74DI				
2555, 2755, 2855, 2855 N	ETS60D3N-ETS62ND	MAG62D			
2955	ETS92ND				
3040, 3130, 3140, 3350, 3640, 3650	ETS92ND-ETS100D2N				
3215, 3220			HDI110S		SHDI140S
3215, 3220			HDI110S		SHDI140S
3300, 3300 X			246850HD	HD110D2/CS	
3400, 3400 X (older types)			246850HD	HD110D2/CS	
3640, 3650 (older types)	ETS100D2N	MAG100D			
3650 (newer types)			HDI110S		SHDI140S
3800 (newer types)			HDI110S		SHDI140S
4040, 4040 S	ETS100D2N	MAG100D			
4050			246850HD	HD110D2/CS	
4055	ETS100ND				
4100, 4300	ETS60D3N-ETS62ND	MAG62D			
4240, 4350, 4450	ETS92ND-ETS100D2N				
4255, 4455, 4500, 4555	ETS100ND		246850HD	HD110D2/CS	
4650, 4850	ETS92ND				
4755, 4955, 4960	ETS100ND		246850HD	HD110D2/CS	
5200, 5300, 5400, 5500	ETS100ND		246850HD	HD110D2/CS	
5210, 5310, 5410, 5510	ETS100ND		246850HD	HD110D2/CS	
5215, 5315, 5415, 5515 ('07→)	ETS100ND		246850HD	HD110D2/CS	
5310, 5410, 5510 NARROW	ETS100ND		246850HD	HD110D2/CS	
5615 F	ETS100ND				
6000	ETS92ND				
6000, 6010 SE			HDI110S		SHDI140S

	RUN / ETS / ES	MAGIS	CARGO/WET	CARGO/DRY	CARGO SHD
JOHN DEERE					
6020, 6100, 6110, 6120, 6200 (newer types), 6210, 6220			HDI110S		SHDI140S
6200	ETS100ND				
6300 (newer types)			HDI110S		SHDI140S
6506, 6510 C, 6510 PQ			HDI143S		SHDI180S
6510 C 4WD			HD155S	HD160S2/CS	
6520			HD155S	HD160S2/CS	
6520, 6520 SE, 6530, 6600			HDI143S		SHDI180S
6530, 6630, 6830, 6930 (Premium) ('07→)			HD180S	HD180S2/CS-HD200S2/CS	
6610 C, 6810 C, 6910 C (4WD)			HD155S	HD160S2/CS	
6910	ETS74DI-ETS74ND	MAG74D			
6910 S 4WD			HD155S	HD160S2/CS	
6920 PLUS (Premium)			HD143S-HD155S		SHDI180S
6920 S PLUS (S Premium)			HD155S	HD160S2/CS	
6950	ETS100D2N	MAG100D			
7405, 7600, 7700, 7710	ETS100ND				
7430, 7530 Premium ('07→)			HD180S	HD180S2/CS-HD200S2/CS	
7430			HDI143S		SHDI180S
7500	ETS100D2N	MAG100D			
7520, 7530			HDI143S		SHDI180S
7600, 7610			246850HD	HD110D2/CS	
7610			246850HD	HD110D2/CS	
7700			HDI143S		SHDI180S
7710	ETS100D2N	MAG100D			
7720, 7730			246850HD	HD110D2/CS	
7810, 8100, 8200, 8300, 8400	ETS100ND-ETS100D2N				
8560, 8570, 8770	ETS100ND-ETS100D2N				
9300, 9400	ETS100ND		246850HD	HD110D2/CS	
9600			246850HD	HD110D2/CS	
D 53, D 85 A			HDI220S	HD220S2/CS	SHDI220S-SHD225S
F 700, F 900	ETS60D3N				
GM 62, GM 72 D, GM 217 D, GM 220 D, GM 223 D, GM 224	ETS60D3N				
GM 327, GM 345, GM 450 D, GM 455 D, GM 580 D, GM 3000	ETS60D3N				
GR 3000 D	ETS50D4N				
HA 205, HA 250			HDI110S		SHDI140S
HD 320			HDI220S	HD220S2/CS	SHDI220S-SHD225S
JD 34			HDI220S	HD220S2/CS	SHDI220S-SHD225S
JD 35			HDI143S		SHDI180S
JD 44, JD 45, JD 54			HDI220S	HD220S2/CS	SHDI220S-SHD225S
JD 310			246850HD	HD110D2/CS	
JD 350 A			HDI110S		SHDI140S
JD 410			HDI143S		SHDI180S
JD 544 B, JD 644 B, JD 670, JD 750, JD 770, JD 772			HDI143S		SHDI180S
MD 330, MD 430, MD 530, MD 630, MD 730, MD 925, MD 930			246850HD	HD110D2/CS	
MD 932			HDI110S		SHDI140S
MD 940			246850HD	HD110D2/CS	

	RUN / ETS / ES	MAGIS	CARGO/WET	CARGO/DRY	CARGO SHD
JOHN DEERE					
MD 945, MD 950, MD 952	ETS100D2N	MAG100D			
MD 954			HDI110S		SHDI140S
MD 955	ETS74DI-ETS74ND	MAG74D			
MD 960			HDI110S		SHDI140S
MD 969, 970, MD 975	ETS100D2N	MAG100D			
MD 1032, MD 1042, MD 1052, MD 1055	ETS100D2N	MAG100D			
MD 1065, MD 1072, MD 1075			HDI110S		SHDI140S
MD 1085, MD 1188	ETS100D2N	MAG100D			
N 4100, N 4300, Super Pro	ETS60D3N				
110, 112, 140, 212, 214, 300, 316, 317, 400	ETS50D4N				
PC 30 MR, PC 35 MR	ETS60D3N				
PC 50 MR	ETS74DI-ETS74ND	MAG74D			
RM 223 D, RM 335 D, RM 450 D, RM 4500 D	ETS60D3N				
SE 6010, SE 6020, SE 6100, SE 6400 (newer types)			HDI110S		SHDI140S
SE 6510, SE 6520, SE 6610, SE 6620			HDI143S		SHDI180S
SK 510	ETS60D3N				
SK 714-5, SK 815-5, SK 818	ETS74DI-ETS74ND	MAG74D			
Z 1155, Z 1158, Z 1169, Z 1174, Z 1177, Z 1188, Z 2054, Z 2056, Z 2058, Z 2064			HDI110S		SHDI140S
Z 2066, Z 6610, Z 6710, Z 6810, Z 6910			HDI110S		SHDI140S
JOY SULLIVAN					
1262	ETS74DI-ETS74ND	MAG74D			
RP 365, RP 600 (Cummins engine)			HDI220S	HD220S2/CS	SHDI220S-SHD225S
TP 365 Compressor			HDI220S	HD220S2/CS	SHDI220S-SHD225S
JUNGHEINRICH					
Ameise			HDI143S		SHDI180S
KAESER					
M 15	ETS100D2N	MAG100D			
M 22, M 25	ETS74DI-ETS74ND	MAG74D			
M 32, M 38, M 51, M 56, M 76	ETS100D2N	MAG100D			
M 120, M 240, M 260			HDI143S		SHDI180S
Mobilair 24	ETS100D2N	MAG100D			
KALBLE					
K 20 B, KV 25 B			HDI143S		SHDI180S
KVW 35			HDI220S	HD220S2/CS	SHDI220S-SHD225S
SL 12			HDI143S		SHDI180S
SL 18			HDI143S		SHDI180S
SL 25			HDI143S		SHDI180S
VG 12, VG 18, VG 18 B			HDI143S		SHDI180S
3 WTV-K	ETS74DI-ETS74ND	MAG74D			
5 WTV, 5 WTV-K			HDI110S		SHDI140S
7 WTV-K, 8 WTV-K			HDI143S		SHDI180S

	RUN / ETS / ES	MAGIS	CARGO/WET	CARGO/DRY	CARGO SHD
KALMAR					
40-45 Ton DRS			HDI143S		SHDI180S
3-500, 5-600	ETS100D2N	MAG100D			
KHD DEUTZ					
D 2-807, D 3-607	ETS100D2N	MAG100D			
D 4-005, D 4-505			HDI110S		SHDI140S
D 4-007, D 4-507, D 4-807, D 5-207	ETS100D2N	MAG100D			
D 5-506			HDI110S		SHDI140S
D 6 Other types, D 7 Other types	ETS100D2N	MAG100D			
D 6-005, D 6-006, D 6-206, D 6-507, D 6-806			HDI110S		SHDI140S
D 7-006, D 7-206, D 7-207, D 7-807, D 8-006			HDI110S		SHDI140S
DX 145, DX 230, DX 250			HDI110S		SHDI140S
DX 310, DX 330, Intrac 22, M 600, M 660, M 750, M 770, M 900	ETS100D2N	MAG100D			
M 1000, M 1080, M 1200, M 1202, M 2385, M 2480	ETS100D2N	MAG100D			
Rubin, Rubin X 100			HDI110S		SHDI140S
KOBELCO					
K 914			HDI220S	HD220S2/CS	SHDI220S-SHD225S
LK 600 A, LK 900			HDI220S	HD220S2/CS	SHDI220S-SHD225S
SK 250			HDI143S		SHDI180S
SK 400			HDI220S	HD220S2/CS	SHDI220S-SHD225S
KOCKUM ÅKERMAN					
84-35			HDI143S		SHDI180S
85-35			HDI143S		SHDI180S
K 414 B, K 425 B, K 442 B, K 445, K 565			HDI220S	HD220S2/CS	SHDI220S-SHD225S
KL 435			HDI220S	HD220S2/CS	SHDI220S-SHD225S
KL 442, KL 445			HDI220S	HD220S2/CS	SHDI220S-SHD225S
KL 540			HDI220S	HD220S2/CS	SHDI220S-SHD225S
KOMAT'SU					
BC 200 LC, 210 LC			HDI110S-HD120S		SHDI140S
BD 240	ETS100D2N	MAG100D			
D 31	ETS100D2N	MAG100D			
D 35, D 40			HDI110S		SHDI140S
D 45, D 45 A, D 45 S			HDI110S		SHDI140S
D 53, 85 A			HD200S	HD220S2/CS	SHDI220S-SHD225S
D 150, D 155, D 155 A, D 205			HDI220S	HD220S2/CS	SHDI220S-SHD225S
D 305	ETS100D2N	MAG100D			
D 355, D 355 A, D 445, D 455			HDI220S	HD220S2/CS	SHDI220S-SHD225S
FD 30-T7	ETS60D3N				
HA 205, 250			HDI110S-HD120S		SHDI140S
HD 320			HD200S-HD220S	HD220S2/CS	SHDI220S-SHD225S
PC MISTRAL	ES45330S				
PC12 R8, HS	ES45330S				
PC15 R8, HS	ES45330S				

	RUN / ETS / ES	MAGIS	CARGO/WET	CARGO/DRY	CARGO SHD
KOMAT'SU					
PC20 R8	ES70540S				
PC27 R8	ES70540S				
PC30 MR	RUN62D				
PC35 R8	ES70540S				
PC35 MR	RUN62D				
PC45 R8	ES70540S				
PC50 MR	RUN72D				
PC75 R-2			HD120D	HD120D2/CS	
PC 95-R8			HDI110S		SHDI140S
PC 210, PC 210-6K, PC 210 LC			HDI110S		SHDI140S
PC 240 LC			HDI143S		SHDI180S
PC 290 LC			HDI143S		SHDI180S
PC 300			HDI220S	HD220S2/CS	SHDI220S-SHD225S
PC 300 LC, PC 300 NLC			HDI110S		SHDI140S
PC 360, PC 400, PC 600 LE-6			HDI220S	HD220S2/CS	SHDI220S-SHD225S
PW75 R-2			HD120D	HD120D2/CS	
PC95 R-2			HD120D	HD120D2/CS	
PW95 R-2			HD120D	HD120D2/CS	
PC110 R-1			HD155D	HD160D2/CS	
PW110 R-1			HD155D	HD160D2/CS	
SK04J-2	ES45330S				
SK05J-2	ES70540S				
SK09J-2			HD120D	HD120D2/CS	
SK510	RUN62D				
SK714-5, 815-5, 818	RUN72D				
W 70, W 90, W 120			HDI110S		SHDI140S
WA 65, WA 75, WA 85, WA 90, WA 115-3, WA 150	ETS100D2N	MAG100D			
WB70 A-1			HD120D	HD120D2/CS	
WB98 A-2			HD155D	HD160D2/CS	
WB91 R-2			HD155D	HD160D2/CS	
WB93 R-2			HD155D	HD160D2/CS	
WB97 R-2			HD155D	HD160D2/CS	
WB97 S			HD155D	HD160D2/CS	
YC- E D	ETS60D3N				
KRAMER					
311, 314	ETS100D2N	MAG100D			
415			HDI110S		SHDI140S
510, 511			HDI143S		SHDI180S
514	ETS100D2N	MAG100D			
515			HDI110S		SHDI140S
611			HDI143S		SHDI180S
614	ETS74DI-ETS74ND	MAG74D			
811			HDI143S		SHDI180S
1014			HDI143S		SHDI180S
1214	ETS100D2N	MAG100D			
1411			HDI110S		SHDI140S

	RUN / ETS / ES	MAGIS	CARGO/WET	CARGO/DRY	CARGO SHD
KRAMER					
K 33			HDI110S		SHDI140S
KL 350, KL 400, KL 450 Export			HDI110S		SHDI140S
KL 550	ETS50D4N				
KL 614 Export	ETS74DI-ETS74ND	MAG74D			
KLB 330			HDI110S		SHDI140S
U 800, UF 900, UF 1000, UF 1003			HDI110S		SHDI140S
VL 400, VL 540			HDI110S		SHDI140S
KRASSER					
U 4V	ETS74DI-ETS74ND	MAG74D			
U 5V, U 6V			246850HD	HD110D2/CS	
KUBOTA					
3250	ETS74DI-ETS74ND	MAG74D			
3750, 4150			HDI110S		SHDI140S
B 1410 D	ES45300D				
B 1550	ES45330D				
B 1610 D	ES45300D				
B 1750, 2150, 2550	ES45330D				
BX 2200 D	ETS50D4N				
F 2000 Plenklipper	ETS50D4N				
G 18	ES45300D				
G 2160	ES45300D				
GZD 15, 16	ES45300S				
KX 91-3	ETS63NS				
KX 101-3	ETS63NS				
L 175, 185, 225, 235, 245, 260, 275	ES70540S				
L 2500, 3110	ES70540D				
L 3010, 3710, 4310	ES70540S				
M 4000, 4050, 4500	ES100720S				
M 4700, 5400, 6800, 8030, 8200,9000	ETS100ND				
TG 1860	ES45300D				
U 20/25-3	ETS40NS				
U 35	ETS63NS				
LABOR HAKO					
1800	ETS50D4N				
2000	ETS60D3N				
2300 D, 3800 D	ETS74DI-ETS74ND	MAG74D			
4000	ETS60D3N				
P 20	ETS50D4N				
LABOURIER					
CL 4, CL 5, CL 85	ETS74DI-ETS74ND	MAG74D			
FPL 85	ETS74DI-ETS74ND	MAG74D			
HL 4	ETS74DI-ETS74ND	MAG74D			
LD 8, LD 25 L, LD 35, LD C	ETS74DI-ETS74ND	MAG74D			

	RUN / ETS / ES	MAGIS	CARGO/WET	CARGO/DRY	CARGO SHD
LABOURIER					
Motochar L, LD	ETS74DI-ETS74ND	MAG74D			
PL 3, PL 4, PL 6, PL 30, PL 35, PL 40, PL 55, PL 60	ETS74DI-ETS74ND	MAG74D			
PLFH 112	ETS74DI-ETS74ND	MAG74D			
TL 34	ETS74DI-ETS74ND	MAG74D			
LALTESI					
40 S	ETS74DI-ETS74ND	MAG74D			
LAMBORGHINI					
4R	ETS92ND-ETS100D2N	MAG100D			
105	ETS100ND-ETS100D2N				
115, 135, 165			HD155D	HD160D2/CS	
1506T			HD180D	HD180D2/CS	
340	ETS100ND-ETS100D2N				
564.60	ETS100ND-ETS100D2N				
574.70 N, 574.N	ETS92ND-ETS100D2N	MAG100D			
600, 660 F, 660 V	ETS100ND-ETS100D2N				
660 S, 770, 770 S, 880, 880 S, 990, 990 S, Other AGILE	ETS100D2N	MAG100D			
674, 674.70, 674.70 N, 674.80 N	ETS92ND-ETS100D2N	MAG100D			
700	ETS100ND-ETS100D2N				
704			HD155D	HD160D2/CS	
775 F, V	ETS100ND-ETS100D2N				
804, 850			HD155D	HD160D2/CS	
850, 950, 1050, 1060			HDI143S		SHDI180S
854			HDI110S		SHDI140S
874-90	ETS100D2N	MAG100D			
904			HDI220S	HD220S2/CS	SHDI220S-SHD225S
950, 1050, 1060, 1106, 1306			HD155D	HD160D2/CS	
955, 955 DT			HDI143S		SHDI180S
956			HDI110S		SHDI140S
1056, 1060, 1106, 1156 DT, 1256			HDI143S		SHDI180S
1506			HDI143S		SHDI180S
1506 Turbo, 1706 Turbo			HDI220S	HD220S2/CS	SHDI220S-SHD225S
AGILE 660 (770) (880) (990) S	RUN95D				
C 53 S			HDI110S		SHDI140S
C 352	ETS74ND-ETS74DI				
C 353, C 353 L, C 362, C 362 S, C 452, C 453, C 453 N	ETS100ND-ETS100D2N				
C 503, C 503 S, C 503 L, C 553, C 553 L, C 553 S, C 554, C 573	ETS100D2N	MAG100D			
C 603 L, 653 L, 684 L, 754 L, 784 L	ETS100ND-ETS100D2N				
C 664	ETS100ND-ETS100D2N				
C 674-40, 674-70, C 774-80 (Erg.), C874-90 (Erg)	ETS100ND-ETS100D2N				
CF 90 (100)	ETS100ND				
CV 70 (80)	ETS100ND				
CHAMPION 120 DT, 135 DT, 150 DT			HD155D	HD160D2/CS	
CHAMPION 160, 180 (DT) (I.CAB)			HD155D	HD160D2/CS	
CHAMPION 200 I.CAB			HD155D	HD160D2/CS	

	RUN / ETS / ES	MAGIS	CARGO/WET	CARGO/DRY	CARGO SHD
LAMBORGHINI					
CRONO 55 F, 65 F, 75 F	ETS100ND				
CRONO Target 2.56 (2.58) (2.66) (2.76) (2.86)	ETS100ND				
CRONO Target 55 (60)	ETS100ND				
CRONO Target F 55 (F 60)	ETS100ND				
CROSS 674 70 N	ETS100ND				
CROSS 774 80 N	ETS100ND				
DL30, CTL, SUPER	ETS92ND				
GRAND PRIX 674-70 (774-80) (874-90) LS	ETS92ND				
GRIMPER 555, 560, 560 G, 570	ETS100ND				
PLUS 660 F, 775 F REV, 880 F, 990 F	ETS100ND				
PREMIUM 850, 950, 1050, 1060			HD120D	HD120D2/CS	
PREMIUM 1100, 1300			HD155D	HD160D2/CS	
R 85 DT, R 85 GS			HDI143S		SHDI180S
R 235, R 355, R 355 DT, R 356 DT, R 365, R 365 DT, R 375	ETS100D2N	MAG100D			
R 470			HDI143S		SHDI180S
R 475 DT	ETS100D2N	MAG100D			
R 480 DT			HDI143S		SHDI180S
R 684, R 684 DT, R 684 DTF, R 684 F, R 693, R 700	ETS100D2N	MAG100D			
R 754			HDI143S		SHDI180S
R 804, R 850, R 854			HDI143S		SHDI180S
R 1056			HDI143S		SHDI180S
R 1106			HDI143S		SHDI180S
R 1.35 (R 1.45) (R 1.55)	ETS74ND-ETS74DI				
R3 Evo 85 (100)	ETS100D2N-RUN95D				
R 3-100 EVO DT, R 3-100 EVO GS, R 3-100 EVO LS, R 3-110 EVO GS			HDI143S		SHDI180S
R3 T 75 (85) (95)	ETS100ND				
R3 TB 75 (85) (95)	ETS100ND				
R 4- 85, R 4-95 (older types)			HDI143S		SHDI180S
R 4.85 (4.95)			HD120D	HD120D2/CS	
R 4.105 (4.110) (4.120)			HD155D	HD160D2/CS	
R 4-105, R 4-105 DT, R 4-110, R 4-120 (older types)			HDI143S		SHDI180S
R 5.115 (5.130)			HD155D	HD160D2/CS	
R 6.100			HD120D	HD120D2/CS	
R 6-100, R 6-110, R 6-120 (older types)			HDI143S		SHDI180S
R 6.110			HD155D	HD160D2/CS	
R 6-125, R 6-130, R 6-130 DCR, R 6-140 DCR, R 6-150 (older types)			HDI143S		SHDI180S
R 6-150 VRT, R 6-150 DCR, R 6-160 DCR (older types)			HDI143S		SHDI180S
R 6.VRT 150.7 (160.7)			HDI143S-HD180S		SHDI180S
R 6-165-7, R 6-165-7 Hi-Profile			HDI143S		SHDI180S
R 7-150, R 7-160			HDI143S		SHDI180S
R 7.175 S (7.190 S)			HD155D	HD160D2/CS	
R 7-200 (newer types)			HDI143S		SHDI180S
R 7.200 →'06			HD155D	HD160D2/CS	
R 7.200 '07→			HD180S	HD180S2/CS-HD200S2/CS	

	RUN / ETS / ES	MAGIS	CARGO/WET	CARGO/DRY	CARGO SHD
LAMBORGHINI					
R 8-230, R 8-230 DCR, R 8-265, R 8-270, R 8-270 DCR			HDI143S		SHDI180S
R 8.230 (8.270)			HD180S	HD180S2/CS-HD200S2/CS	
R F 75 (90) (100)	RUN95D				
RF 70, RF 75, RF 90, RF 100, RS 70, RS 75, RS 90, RS 90 DT, RS 100	ETS100D2N	MAG100D			
R S 75 (90) (100)	RUN95D				
R 235	ETS74ND-ETS74DI				
R 483 DT, 503, 503 DT	ETS100ND				
R 564 DT, 603 DF	ETS100ND				
R 653 DT, DTF, F	ETS100ND				
R 684 DT, DTF, F	ETS100ND				
R 754 DT, 784 DT, 804 DTS	ETS100ND				
R 850, 904 DT, 904 DTS			HD120D	HD120D2/CS	
R 950, 955 DT, 956, 1050			HD120D	HD120D2/CS	
R 1056 DT			HD155D	HD160D2/CS	
R 1060			HD120D	HD120D2/CS	
R 1156 DT, 1256 DT, 1356 DT			HD155D	HD160D2/CS	
RACING 150, 165, 190, HI.PER.			HD180D	HD180D2/CS	
RUNNER 250 (JET), 350 (HD) (A), 450	ETS74ND-ETS74DI				
SPRINT 664-65	ETS100ND				
TP 25, TP 35, TP 65, TP 65 DL, TT 33, TT 77	ETS100D2N	MAG100D			
TRIUMPH 80, 90, 100			HD120D	HD120D2/CS	
LANDINI					
50, 55, 60, 65, 75, 85, 95	ETS92ND-ETS100D2N	MAG100D			
65.30	ES70540S				
68.30, 68.40	ETS100ND				
85.30, 85.50, 88.30	ETS100ND				
4500	ETS92ND				
5000, 5005, 5030, 5500, 5560	ETS100ND-ETS100D2N				
5860, 6000	ETS100ND-ETS100D2N				
6030, 6040	ETS100D2N	MAG100D	246850HD	HD110D2/CS	
6060, 6070, 6500, 6505, 6560, 6830	ETS100ND				
6880	ETS92ND		HDI143S		SHDI180S
7000, 7500, 7505, 7530	ETS100ND-ETS100D2N				
7550	ETS92ND				
7830, 7860	ETS100ND				
7880			HDI143S-HD155S		SHDI180S
8000, 8550	ETS100ND-ETS100D2N				
8500	ETS92ND-ETS100D2N	MAG100D			
8830, 8860	ETS100ND-ETS100D2N				
8880, 9080			HD155S	HD160S2/CS	
8880 DT, 8880 DTT, 9000, 9080, 9500			HDI110S		SHDI140S
9500	ETS92ND				
9880			HDI143S-HD155S		SHDI180S
10.000, 13.000MKII, 14.500MKII			HD125D	HD125D2/CS	
10000			HD155D	HD160D2/CS	

	RUN / ETS / ES	MAGIS	CARGO/WET	CARGO/DRY	CARGO SHD
LANDINI					
10000 S (newer types)			246850HD	HD110D2/CS	
10500	ETS92ND-ETS100D2N	MAG100D			
12500			HD132D		
13000, 13500			HD155D	HD160D2/CS	
14500			HD132D		
16500/4RM			HD125D	HD125D2/CS	
ALPINE 60 (70) (80) (GT)	ETS100ND				
ALPINE 65 (75) (85) STD, GT	ETS100ND				
ATLANTIS DT 70, 80, 90, 100	ETS100ND				
ATLAS DT 70, 80, 90, 100	ETS100ND				
C 25 DIESEL	ETS92ND				
C 4500, 5000, 6500	ETS100ND				
CL 3200	ETS100ND				
DISCOVERY 65 (85) C, M	ETS100ND				
DT 5000	ETS100ND				
DT 9500			HD120D	HD120D2/CS	
GHIBLI DT 80, 90, 100	ETS100ND				
GLOBUS 55 (60) (65) (70) (75) (80)	ETS100ND				
L 25	ETS92ND				
LANDPOWER 125 (135) (145) (165) (180) (185)			HD120D	HD120D2/CS	
LEGEND 105, 115, 130, 145, 165, 180			HD132D		
LEGEND 120 (140) (160)			HD120D	HD120D2/CS	
MISTRAL 40, 45, 50, 55	ETS60D3N-ETS62ND	MAG62D			
MYTHOS DT 90, 100	ETS100ND				
MYTHOS DT 110			HD132D		
POWERFARM 60 (75) (80) (85) (90) (95) (100) (105)	ETS100ND				
R 25	ETS92ND-ETS100D2N	MAG100D			
R 4500, 5000 N, 5000 S	ETS100ND				
R 7000 DT, 8000, 8500, 9500			HD120D	HD120D2/CS	
REX 60, 70, 80, 90, 100 (F) (GE)	ETS100ND				
REX 75, 85, 95, 105 (GT)	ETS100ND				
REX 1000 GT	ETS100ND				
REX F (GE) 65, 75, 85, 95, 105	ETS100ND				
REX V 60, 65, 70, 80	ETS74ND-ETS74DI				
RV 25	ETS92ND-ETS100D2N	MAG100D			
TREKKER series	ETS100ND				
VISION DT 80 (90) (100) TOP	ETS100ND				
VISION 85 (95) Techno	ETS100ND				
LAVERDA					
150			HD155D	HD160D2/CS	
3300 AL			HD120D	HD120D2/CS	
3350 AL			HD155D	HD160D2/CS	
3300, 3350			HDI143S		SHDI180S
3400			HD180D	HD180D2/CS	
3450			HD155D	HD160D2/CS	
3550			HD180D	HD180D2/CS	

	RUN / ETS / ES	MAGIS	CARGO/WET	CARGO/DRY	CARGO SHD
LAVERDA					
3600, 3700, 3750, 3790, 3890, 3900			HD155D	HD160D2/CS	
3600, 3650, 3700, 3750, 3790, 3800, 3850, 3890, 3900 (older Types)			HDI143S		SHDI180S
AFC 16	ES70540S				
M 92 AL			HD120D	HD120D2/CS	
M 112, 120, 132			HD132D		
M 152, M, OM, TA			HD155D	HD160D2/CS	
M 152 MP			HD132D		
MX 240, MX 300 (older types)			HDI143S		SHDI180S
LEYLAND					
3 DL	ETS74DI-ETS74ND	MAG74D			
4-25	ETS74DI-ETS74ND	MAG74D			
10-42	ETS74DI-ETS74ND	MAG74D			
154, 245 (diesel)			246850HD	HD110D2/CS	
342, 342-40	ETS74DI-ETS74ND	MAG74D			
395-40	ETS74DI-ETS74ND	MAG74D			
502			246850HD	HD110D2/CS	
1060-2, 1080-1			HDI143S		SHDI180S
Bear				HD105S2/CS	
U 40	ETS74DI-ETS74ND	MAG74D			
Mini			246850HD	HD110D2/CS	
LIBRA					
216 S	ETS74DI-ETS74ND	MAG74D			
LIEBHERR					
308, 312	ETS100D2N	MAG100D			
520	ETS100D2N	MAG100D			
551, 751, 621	ETS100D2N	MAG100D			
631, 641			HDI110S		SHDI140S
721	ETS74DI-ETS74ND	MAG74D			
722, 731, 741			HDI143S		SHDI180S
900 L	ETS100D2N	MAG100D			
902 Litronic	ETS100D2N	MAG100D			
911 A	ETS100D2N	MAG100D			
952			HDI143S		SHDI180S
1045, 1055			HDI143S		SHDI180S
A 309, A 316 Litronic	ETS100D2N	MAG100D			
A 900, A 901, A 902			HDI110S		SHDI140S
A 911, A 912			HDI110S		SHDI140S
Bos			HDI110S		SHDI140S
HS 835, HS 845, HS 855, HS 675, HS 885, HS 895 HD Litronic			HDI220S	HD220S2/CS	SHDI220S-SHD225S
L 506, L 507, L 508, L 509, L 514 Stereo	ETS100D2N	MAG100D			
L 524, L 534, L 538, L544, L 556, L 566, L 576, L 580			HDI220S	HD220S2/CS	SHDI220S-SHD225S
LR 622			HDI110S		SHDI140S

	RUN / ETS / ES	MAGIS	CARGO/WET	CARGO/DRY	CARGO SHD
LIEBHERR					
LR 632			HDI143S		SHDI180S
LTM 120			HDI143S		SHDI180S
LTM 1120			HDI143S		SHDI180S
PR 712, PR 712 B Litronic, PR 722, PR 724 Litronic, PR 731 L, PR 731 M			HDI110S		SHDI140S
PR 731, PR 732, PR 734 Litronic, PR 741, PR 742, PR 744 Litronic			HDI143S		SHDI180S
PR 751, PR 752, PR 752 Litronic, PR 764 Litronic			HDI143S		SHDI180S
R 310, R 313, R 317 Litronic	ETS100D2N	MAG100D			
R 900, R 901, R 904 C Litronic			HDI110S		SHDI140S
R 924 B Litronic, R 924 B Compact			HDI110S		SHDI140S
R 934 C Litronic			HDI110S		SHDI140S
R 944 C, R 954 C Litronic			HDI110S		SHDI140S
R 964 B Litronic			HDI110S		SHDI140S
R 974 B, R 984 C, R 994, R 995, R 996 Litronic, R 9250, R 9350			HDI110S		SHDI140S
RL 22, RL 22 B Litronic			HDI110S		SHDI140S
RL 42, RL 42 B Litronic			HDI143S		SHDI180S
RL 52 Litronic			HDI110S		SHDI140S
RL 712 BM Litronic			HDI143S		SHDI180S
T 252, T 262, T 282 B, TL 435-10, TL 435-13, TL 442-13, TL 445-10			HDI220S	HD220S2/CS	SHDI220S-SHD225S
LINDE					
H 12, H 12 F, H 15 F, H 16	ETS50D4N				
H 20 F, H 25 F, H 30 F, H 35 F, H 40 F	ETS74DI-ETS74ND	MAG74D			
H 20, H 25, H 30	ETS100D2N	MAG100D			
HH 15	ETS50D4N				
LPG	ETS100D2N	MAG100D			
LINDNER					
GEOTRAC 50	ETS92ND				
Geotrac 50, 60, 63, 65	ETS100D2N	MAG100D			
GEOTRAC 65	ETS92ND				
Geotrac 70, 73, 83, 93, 102, 103			HDI110S		SHDI140S
LOISEAU					
237-2, 250, 295, 327-2	ETS100D2N	MAG100D			
344			HDI143S		SHDI180S
351 D, 372-2	ETS100D2N	MAG100D			
378			246850HD	HD110D2/CS	
436, 436 E, 436 M, 634, 634-6, 634-6L, 640, 736, 746, 746-78	ETS100D2N	MAG100D			
780 (newer types)			246850HD	HD110D2/CS	
862, 864			246850HD	HD110D2/CS	
1264			HDI143S		SHDI180S
1301, 1501 AV			246850HD	HD110D2/CS	

	RUN / ETS / ES	MAGIS	CARGO/WET	CARGO/DRY	CARGO SHD
LOISEAU					
1501, 1501 V, 2000, 2000 L, 2501	ETS100D2N	MAG100D			
3280			246850HD	HD110D2/CS	
3860, 3864			HDI143S		SHDI180S
4000			HDI110S		SHDI140S
L 35, L 40 (diesel)	ETS74DI-ETS74ND	MAG74D			
L 35, L 40 (petrol)	ETS60D3N				
L 44			HDI143S		SHDI180S
L 45, L 60 (diesel)	ETS100D2N	MAG100D			
L 45, L 60 (petrol)	ETS60D3N				
3 Rangs 4000			HDI110S		SHDI140S
4 Wheel Driver			HDI110S		SHDI140S
34 (x4)			HDI143S		SHDI180S
55	ETS100D2N	MAG100D			
H 2			246850HD	HD110D2/CS	
LOKOMO					
14-07, 14-09, 23-07, 23-09, 36-07, 36-07 Mobile Crane			HDI143S		SHDI180S
923			HDI143S		SHDI180S
961	ETS100D2N	MAG100D			
AH 132 PS			HDI143S		SHDI180S
AH 172 PS			HDI143S		SHDI180S
PPM 187, TC 5			HDI110S		SHDI140S
LOMBARDINI					
TL 25, TL 30, TL 40	ETS100D2N	MAG100D			
MAN TRAKTORER					
2			HDI143S		SHDI180S
4 S 1, 4 S 2, 4 T, 22			HDI143S		SHDI180S
18226, L 2000			HDI110S		SHDI140S
MANITOU					
202 B, 252 B, 302 B			HD155S	HD160S2/CS	
2050 DF 33	ETS92ND				
244H, 344H			HD105D	HD105D2/CS	
4 RE 20C, 20CL, 25C, 25CL			HD105D	HD105D2/CS	
4 RE 30H			HD155S	HD160S2/CS	
4 RM 20 C (FA) (G) (H) (P)			HD105D	HD105D2/CS	
4 RM 25 C (FA) (G)			HD105D	HD105D2/CS	
4 RM 26 (N)			HD105D	HD105D2/CS	
4 RM 35C, 40C			HD155S	HD160S2/CS	
HC 20 E, 25 E	ETS92ND				
IF 25.25 F, 25.30 F			HD105D	HD105D2/CS	
M 26-2, M 26-4, M 30-2, M 30-4, M 40-4, M 50-4			246800.1HD		
MA 20, MA 20 C, MA 20 GPL, MA 20 M, MA 25, MA 25 C			246850HD	HD110D2/CS	
MA 20, 25 various models			HD105D	HD105D2/CS	
MB 16 S, MB 20 C, MB 20 CL, MB 20 FA, MB 20 G			246850HD	HD110D2/CS	

	RUN / ETS / ES	MAGIS	CARGO/WET	CARGO/DRY	CARGO SHD
MANITOU					
MB 16 S, 20, 21, 25, 26, 30 various models			HD105D	HD105D2/CS	
MB 21, MB 21 C, MB 21 J			246850HD	HD110D2/CS	
MB 25 D, 25 TC, 30 TC, 40, 50, 60			HD155S	HD160S2/CS	
MB 25 FA, MB 25 G, MB 26, MB 26 J			246850HD	HD110D2/CS	
MB 30 A, MB 30 C, MB 30 G			246850HD	HD110D2/CS	
MB 30 TC, MB 40, MB 50, MB 60, MB 60 H			HDI143S		SHDI180S
MC 10, 15, 18, 20, 25, 30 various models			HD105D	HD105D2/CS	
MC 10, MC 15, MC 15 A, MC 15 D			246850HD	HD110D2/CS	
MC 18, MC 18 A, MC 18 D, MC 20 A, MC 20 C, MC 20 DM			246850HD	HD110D2/CS	
MC 20 HP, MC 20 M, MC 20 P, MC 20 TC			246850HD	HD110D2/CS	
MC 25 C, MC 25 H, MC 25 M, MC 25 TC			246850HD	HD110D2/CS	
MC 30 H, MC 30 M, MC 30 N, MC 30 TC			246850HD	HD110D2/CS	
MC 40 TC, 50, 80			HD155S	HD160S2/CS	
MC 40, MC 40 TC, MC 50, MC 60 TC, MC 80			HDI143S		SHDI180S
MCE 20, 25, 30 various models			HD105D	HD105D2/CS	
MCE 20, MCE 20 C, MCE 20 N, MCE 20 TC, MCE 25, MCE 25 C, MCE 25 N			246850HD	HD110D2/CS	
MCE 30, MCE 30 C, MCE 30 H, MCE 30 N, MCE 30 TC			246850HD	HD110D2/CS	
MCE 40 H, MCE 40 SP			HDI143S		SHDI180S
MCL 20, MCL 25, MCL 30, MCL 30 H			246850HD	HD110D2/CS	
MCL 30H			HD105D	HD105D2/CS	

MANITOU					
M 26-2, M 26-4, M 30-2, M 30-4, M 40-4, M 50-4			246800.1HD		
MA 20, MA 20 C, MA 20 GPL, MA 20 M, MA 25, MA 25 C			246850HD	HD110D2/CS	
MB 16 S, MB 20 C, MB 20 CL, MB 20 FA, MB 20 G			246850HD	HD110D2/CS	
MB 21, MB 21 C, MB 21 J			246850HD	HD110D2/CS	
MB 25 D, MB 25 M, MB 25 TC			HDI143S		SHDI180S
MB 25 FA, MB 25 G, MB 26, MB 26 J			246850HD	HD110D2/CS	
MB 30 A, MB 30 C, MB 30 G			246850HD	HD110D2/CS	
MB 30 TC, MB 40, MB 50, MB 60, MB 60 H			HDI143S		SHDI180S
MC 10, MC 15, MC 15 A, MC 15 D			246850HD	HD110D2/CS	
MC 18, MC 18 A, MC 18 D, MC 20 A, MC 20 C, MC 20 DM			246850HD	HD110D2/CS	
MC 20 HP, MC 20 M, MC 20 P, MC 20 TC			246850HD	HD110D2/CS	
MC 25 C, MC 25 H, MC 25 M, MC 25 TC			246850HD	HD110D2/CS	
MC 30 H, MC 30 M, MC 30 N, MC 30 TC			246850HD	HD110D2/CS	
MC 40, MC 40 TC, MC 50, MC 60 TC, MC 80			HDI143S		SHDI180S
MCE 20, MCE 20 C, MCE 20 N, MCE 20 TC, MCE 25, MCE 25 C, MCE 25 N			246850HD	HD110D2/CS	
MCE 30, MCE 30 C, MCE 30 H, MCE 30 N, MCE 30 TC			246850HD	HD110D2/CS	
MCE 40 H, MCE 40 SP			HDI143S		SHDI180S
MCL 20, MCL 25, MCL 30, MCL 30 H			246850HD	HD110D2/CS	
MH 20, MH 25			246800.1HD		
MI 60 H, MI 70 H			HDI143S		SHDI180S
ML 635, MLA 625, MLA 628			246800.1HD		
MLT 523, MLT 526, MLT 627			246800.1HD		
MLT 628			HDI143S		SHDI180S

	RUN / ETS / ES	MAGIS	CARGO/WET	CARGO/DRY	CARGO SHD
MANITOU					
MLT 629, MLT 630, MLT 633			246800.1HD		
MP 800, MRT 1540			HDI143S		SHDI180S
MSI 20, MSI 25, MSI 30, MSI 35, MSI 40, MSI 50			246800.1HD		
MT 220, MT 225, MT 420, MT 425, MT 732, MT 835			246800.1HD		
MT 845			HDI143S		SHDI180S
MT 940, MT 1235, MT 1240, MT 1335			246800.1HD		
MT 1337 LT			HDI143S		SHDI180S
MT 1340, MT 1435, MT 1440, MT 1740, MT 1745			246800.1HD		
4 RE 20 C, 4 RE 20 CL, 4 RE 25 C, 4 RE 25 CL			246850HD	HD110D2/CS	
4 RE 30 H			HDI143S		SHDI180S
4 RE 60 HP			HDI143S		SHDI180S
4 RM 20 C, 4 RM 20 FA, 4 RM 20 G, 4 RM 20 H, 4 RM 20 P, 4 RM 25, 4 RM 25 C			246850HD	HD110D2/CS	
4 RM 25 FA, 4 RM 25 G, 4 RM 26, 4 RM 26 N, 4 RM 30 C, 4 RM 30 G, 4 RM 30 N, 4 RM 35			246850HD	HD110D2/CS	
4 RM 35 C, 4 RM 40 C, 4 RM 40 K Site Lift			HDI143S		SHDI180S
TMT 25-20, TMT 25-25, TMT 315, TMT 320			246800.1HD		
202 B, 252 B, 302 B			HDI143S		SHDI180S
244 H, 344 H			246850HD	HD110D2/CS	
2050 DF 33	ETS100D2N	MAG100D			
AT 425 FC			HDI143S		SHDI180S
HC 20 E, HC 25 E	ETS100D2N	MAG100D			
IF 25-25 F, 25-30 F			246850HD	HD110D2/CS	
NV 40 FC, NV 100 F			HDI143S		SHDI180S
SLT 415			246800.1HD		
MARSHALL					
135	ETS74DI-ETS74ND	MAG74D			
642, 644, 742, 744, 844			HDI110S		SHDI140S
944			HDI143S		SHDI180S
D 110			HDI143S		SHDI180S
MASSEY FERGUSON					
7, 8, 11, 20, 21, 22-B6, 24, 25, 27, 29, 30, 30-8			246850HD	HD110D2/CS	
32 (older types)			HDI110S		SHDI140S
32, 33 (newer types), 33 BC			246850HD	HD110D2/CS	
35	ETS100D2N	MAG100D			
37, 40, 42, 44			246850HD	HD110D2/CS	
50, 50 B, 50 D			246800.1HD		
65-II, 70-6, 75 C			246800.1HD		
81 C, 82 C			HDI143S		SHDI180S
90, 94 C			246800.1HD		
122			246800.1HD		
124 C	ETS100D2N	MAG100D			
130, 132, 133, 134, 134 C, 135, 140, 142, 145, 146 C, 152, 152 F, 152 V			246800.1HD		
148, 187, 520, 625, 670, 760			HD105D	HD105D2/CS	

	RUN / ETS / ES	MAGIS	CARGO/WET	CARGO/DRY	CARGO SHD
MASSEY FERGUSON					
155, 158, 165, 165-II, 165-III, 168			246800.1HD		
175, 178, 185, 186, 187, 188, 195			246800.1HD		
200, 203, 205, 206, 230, 233, 234 C, 235, 240, 244			246850HD	HD110D2/CS	
244 CRAWLER			HDI110S-HD125D		SHDI140S
245, 250, 254, 254-4, 252, 253, 254, 254 C, 255, 260, 263, 264			246800.1HD		
265, 265-4, 273, 274, 274-4			246850HD	HD110D2/CS	
275, 175-2, 285			246850HD	HD110D2/CS	
275-4, 283			HDI110S		SHDI140S
285-2, 285-4, 287 (older types), 290-4			HDI110S		SHDI140S
300, 307, 324			246850HD	HD110D2/CS	
346, 350	ETS100D2N	MAG100D			
354 F, 354 K, 354 S, 354 V (newer types)	ETS100D2N	MAG100D			
355, 356, 360, 362			246850HD	HD110D2/CS	
364 F, 364 S, 364 V (newer types)			246800.1HD		
365			HDI110S		SHDI140S
366, 372, 373			246800.1HD		
374 F, 374 S, 374 V (newer types)			246800.1HD		
375, 384 F, 384 S, 390, 390 T	ETS100D2N	MAG100D			
394 F, 394 S, 398	ETS74DI-ETS74ND	MAG74D			
410, 410-8, 418			246850HD	HD110D2/CS	
450 C-R7	ETS50D4N				
450, 450 BR	ETS74DI-ETS74ND	MAG74D			
487, 500 (newer types), 500-7, 503, 506, 507, 510, 515, 520, 525			246850HD	HD110D2/CS	
530			246850HD	HD110D2/CS	
550			HDI143S		SHDI180S
560, 560-5			246850HD	HD110D2/CS	
565			HDI143S		SHDI180S
590			246850HD	HD110D2/CS	
600, 600C, 620, 625, 630	ETS74DI-ETS74ND	MAG74D			
655, 665	ETS50D4N				
670, 675, 690, 698			HDI110S		SHDI140S
700, 702			246850HD	HD110D2/CS	
800, 805, 810, 820, 825	ETS60D3N				
830			HDI110S		SHDI140S
835	ETS50D4N				
840, 845			HDI110S		
850-5, 860-5	ETS50D4N				
1000			246850HD	HD110D2/CS	
1004, 1014			HDI143S		
1020, 1030, 1040, 1080, 1100			246850HD	HD110D2/CS	
1105			246800.1HD		
1135, 1155			246800.1HD		
1182			HDI143S		
1200			246800.1HD		
1205, 1210, 1220, 1230 Mini	ETS100D2N	MAG100D			

	RUN / ETS / ES	MAGIS	CARGO/WET	CARGO/DRY	CARGO SHD
MASSEY FERGUSON					
1250			246850HD	HD110D2/CS	
1500, 1505			246800.1HD		
1800, 1805			246850HD	HD110D2/CS	
2000 Mini	ETS74DI-ETS74ND	MAG74D			
2230			246800.1HD		
2545, 2625			246850HD	HD110D2/CS	
3100	ETS100D2N	MAG100D			
3315-4, 3325-4, 3330-4, 3340-4, 3350-4, 3355-4	RUN95D				
3600, 3610, 3625, 3630, 3635			246800.1HD		
3645, 3646, 3650, 3655	ETS100D2N	MAG100D			
3670, 3680, 3690, 4000, 4200			246850HD	HD110D2/CS	
4225-4, 4235-4			HD105D	HD105D2/CS	
4245-4, 4255-4			HD105D	HD105D2/CS	
4245, 4245-4, 4245-4 CP, 4355, 4255-4, 4255-4 CP	ETS74DI-ETS74ND	MAG74D			
4270-4	ETS74ND-ETS74DI				
4270-4, 4800, 4840, 4880	ETS74DI-ETS74ND	MAG74D			
4900			246850HD	HD110D2/CS	
5130, 5150, 5170, 5180			HDI110S		SHDI140S
5400, 5425, 5435, 5445, 5455, 5460, 5465			246850HD	HD110D2/CS	
6245-4, 6255-4, 6260-4, 6265-4	ETS74ND-ETS74DI				
6110, 6120, 6130, 6140, 6150, 6160, 6170, 6180, 6190	ETS74DI-ETS74ND	MAG74D			
6200, 6245-4, 6255, 6255-4, 6260-4, 6265-4, 6270-4, 6280-4, 6290, 6290-4			246850HD	HD110D2/CS	
6270-4, 6280-4, 6290-4	ETS74ND-ETS74DI				
7238, 7256, 7260, 7274, 7276	ETS74DI-ETS74ND	MAG74D			
8100, 8110, 8120, 8130, 8140, 8150, 8160, 8170	ETS74DI-ETS74ND	MAG74D			
8210-4, 8220-4, 8240-4, 8250-4	ETS74ND-ETS74DI				
8270-4, 8280-4			HDI110S		SHDI140S
8480	ETS50D4N				
9240			246850HD	HD110D2/CS	
D 600 C, D 700 C			246850HD	HD110D2/CS	
FE 1L, 35, 175			HD125D	HD125D2/CS	
FE 21 L, FE 35, FE 65			246850HD	HD110D2/CS	
FE 65 3CYL, 4L			HD105D	HD105D2/CS	
FE135	ETS63NS				
FE 135, FE 165 (cold climate)			HDI220S	HD220S2/CS	SHDI220S-SHD225S
FE 135, FE 165, FE 175 (diesel)			246800.1HD		
FE 135 COLD			HD125D	HD125D2/CS	
MB 26			246800.1HD		
MF 133, 134C, 154C			HD125D	HD125D2/CS	
MF134V, 154S,154V, 164V	ETS74ND-ETS74DI				
MF 134V, 154V, 164V, 174V 184S (11/88→)	ETS74ND-ETS74DI				
MF174S, 184S, 194F (11/88 →)	ETS100ND		246850HD	HD110D2/CS	
MF174V, 184S, 194A, 194F (11/88 →)			HD125D	HD125D2/CS	
MF154	ETS63NS				
MF 145C, 165C, 174C			HD125D	HD125D2/CS	
MF 135, 148, 152, 155, 158, 165, 168			HD105D	HD105D2/CS	

	RUN / ETS / ES	MAGIS	CARGO/WET	CARGO/DRY	CARGO SHD
MASSEY FERGUSON					
MF 165, MF 165 C			246850HD	HD110D2/CS	
MF 175, 178, 185, 188, 252,			HD105D	HD105D2/CS	
MF 200, MF 200 B, MF 203, MF 205, MF 206, MF 230, MF 234 S, MF 235			246850HD	HD110D2/CS	
MF 230, 240, 250 (→'85)			HD105D	HD105D2/CS	
MF 230, 240, 250 ('85 →)	ETS63NS				
MF 234C, 254C, 274C, 294C, 298, 362			HD125D	HD125D2/CS	
MF 234S, 254	ES70540S				
MF 235			246850HD	HD110D2/CS	
MF 254 S, MF 263, MF 265, MF 265-4			246800.1HD		
MF 252			HD105D	HD105D2/CS	
MF 253, 275	ETS63NS				
MF 254S	ETS92ND				
MF 254 S, MF 263, MF 265, MF 265-4			246800.1HD		
MF 263, 265, 274S, 274SK, 290			HD105D	HD105D2/CS	
MF 274S, 274SK, 284S, 294S	ETS100ND-ETS100D2N				
MF 330	ETS74DI-ETS74ND	MAG74D			
MF 340, 350, 355, 360	ETS63NS				
MF 352, MF 353, MF 354 F, MF 354 S, MF 355			246850HD	HD110D2/CS	
MF 353, 363	ES70540S				
MF 353, 363 (→ 11/88)	ETS92ND				
MF 354S, 354F, 364F	ETS92ND				
MF 356			HDI110S		SHDI140S
MF 360, MF 362, MF 363, MF 365, MF 373, MF 374 S, MF 375, MF 375 E			246850HD	HD110D2/CS	
MF 365, 375, 390T, 398, 399	ETS63NS				
MF 373, 374S, 383, 384S, 393 (11/88 →)	ETS100ND				
MF 394S	ETS100ND				
MF 383, 393			HD125D	HD125D2/CS	
MF 400, MF 410, MF 415, MF 418			246850HD	HD110D2/CS	
MF 410, 418, 487, 500, 507, 510			HD105D	HD105D2/CS	
MF 450 B, MF 487, MF 500			246850HD	HD110D2/CS	
MF 503, MF 506			246800.1HD		
MF 510-7, MF 515, MF 515-7, MF 516, MF 520			246850HD	HD110D2/CS	
MF 515, 520, 525, 620, 625, 630			HD105D	HD105D2/CS	
MF 530, MF 550, MF 550-3, MF 550-6			246800.1HD		
MF 550, 565, 575, 590, 670			HD105D	HD105D2/CS	
MF 595, MF 600, MF 620, MF 625, MF 630, MF 647, MF 655, MF 665, MF 670			246850HD	HD110D2/CS	
MF 655, 665			HD125D	HD125D2/CS	
MF 675, 690, 698 (→'85)			HD125D	HD125D2/CS	
MF 675, 690, 698 ('85 →)	ETS63NS				
MF 675, MF 690	ETS100D2N	MAG100D			
MF 699	ETS63NS				
MF 750, 760	ETS63NS		HDI110S		SHDI140S
MF 800, MF 805, MF 825, MF 830, MF 835, MF 845			246850HD	HD110D2/CS	
MF 828, 830, 835, 845			HD125D	HD125D2/CS	

	RUN / ETS / ES	MAGIS	CARGO/WET	CARGO/DRY	CARGO SHD
MASSEY FERGUSON					
MF 850,860	ETS63NS				
MF 1010, MF 1020, MF 1030, MF 1040			246800.1HD		
MF 1020, 1030, 1040, 1080			HD105D-246850HD	HD105D2/CS	
MF 1100, 1105, 1135, 1155, 1550			246850HD-HD125D		
MF 1505, 2135, 2203, 2205			HD105D	HD105D2/CS	
MF 1550, MF 2135 C			246850HD	HD110D2/CS	
MF 2135C, 2203C			HDI110S-HD125D		SHDI140S
MF 2203 C, MF 2205, MF 2210, MF 2225, MF 2235, MF 2405					
MF 2210, 2225, 2235	ETS100ND				
MF 2430, 2435, 2440	ETS100ND				
MF 2620			HD105D-246850HD	HD105D2/CS	
MF 2625			HD105D-246850HD	HD105D2/CS	
MF 2645, 2685, 2725 8 (10/85 →)			HD105D-246850HD	HD105D2/CS	
MF 2680, 2720			HD105D-246850HD	HD105D2/CS	
MF 3050, 3060, 3065, 3070, 3080, 3090, 3095	ETS63NS				
MF 3115, 3120, 3125	ETS63NS				
MF 3315 F, 3325 F, 3330F,3340F, 3350F, 3355F	RUN95D		246850HD	HD110D2/CS	
MF 3366 D, MF 3366 L			246850HD	HD110D2/CS	
MF 3425, 3435, 3445, 3455	RUN95D				
MF 3610, 3630, 3635, 3645, 3650, 3655			246850HD	HD110D2/CS	
MF 3670, 3680, 3690	ETS63NS				
MF 4200, 4215, 4225, 4230,			HD105D	HD105D2/CS	
MF 4233, 4235, 4240, 4243, 4245, 4255			HD105D	HD105D2/CS	
MF 4435, 4445, 4455			HD105D	HD105D2/CS	
MF 5425, 5435, 5445, 5455, 5460, 5465, 5470, 5475	RUN95D				
MF 5751, MF 6110			246850HD	HD110D2/CS	
MF 6120			HDI110S		SHDI140S
MF 6130			246850HD	HD110D2/CS	
MF 6445, 6455, 6460, 6470	ETS63NS				
MF 6465, 6475, 6480 DYNASHIFT PLUS	ETS63NS				
MF 6485, 6490, 6495 DYNASHIFT PLUS	ETS63NS				
MF 6497, 6499	ETS63NS				
MF 7465, 7475, 7480 DYNA-VT	ETS63NS				
MF 7485, 7490, 7495 DYNA-VT	ETS63NS				
MF 8110, MF 8120, MF 8130			246850HD	HD110D2/CS	
MF 8140, 8150, 8160, 8170			HD105D	HD105D2/CS	
MF 8210, MF 8220, MF 8230, MF 8240, MF 8250, MF 8260, MF 8270, MF 8280			246850HD	HD110D2/CS	
MF 8210, 8220, 8230, 8240, 8250	ETS63NS				
MF 8240, 8250, 8260, 8270, 8280			HD105D	HD105D2/CS	
MS 21	ETS50D4N				
TA PERKINS	ES70540S				
TE 20	ETS50D4N				
TEF (Perkins)			246850HD	HD110D2/CS	

	RUN / ETS / ES	MAGIS	CARGO/WET	CARGO/DRY	CARGO SHD
MC CORMICK					
C 50 (60) (70) (80)	ETS100ND				
C-MAX 60 (75) (85) (95) (105)	ETS100ND				
CX 70, 80, 90, 100	ETS100ND				
CX 75 (85) (95) (105) XTRA SHIFT	ETS100ND				
F 60-4, 70-4, 80-4, 90-4, 100-4	ETS100ND				
F 75 (85) (95) (105) (GE) (XL)	ETS100ND				
GM 40, GM 45, GM 50, GM 55	ETS60D3N-ETS62ND	MAG62D			
MC 80, 90, 100	ETS100ND				
MTX 110, 125, 140, 155			HD132D		
T 70, 80, 90, 100 (F) (FL)			HD132D		
V 65-4	ETS74ND-ETS74DI				
XTX 150 (165) (185)			HD105D	HD105D2/CS	
ZTX 230 (260) (280)	ETS100ND				
MERCEDES-BENZ					
680, 700, 700-440, 800, 800-440, 900, 900-440, 1000, 1000-441			HDI110S		SHDI140S
1100 (newer ypes)			HDI143S		SHDI180S
1100, 1100-442 (older types)			HDI110S		SHDI140S
1250, 1300, 1300-443, 1350, 1400, 1450, 1500, 1500-443, 1550			HDI110S		SHDI140S
1600 (newer ypes)			HDI143S		SHDI180S
1600 (older types), 1650, 1700. 1700-437, 1750			HDI110S		SHDI140S
1926	ETS100D2N	MAG100D			
2150, 2150-437			HDI110S		SHDI140S
2548			HDI143S		SHDI180S
65, 70, 700, 800, 900			HDI110S		SHDI140S
6-60, 8-00			HDI143S		SHDI180S
700, 800, 900, 900 Turbo, 1000			HDI110S		SHDI140S
1100			HDI143S		SHDI180S
1300, 1400 Turbo, 1500, 1600			HDI110S		SHDI140S
U 34-411, U 40-421, U 80-406			246850HD	HD110D2/CS	
U 1700-437, U 1750-437, U 2100-437, U 2150-437			HDI110S		SHDI140S
406, 416, 421, 424, 425, 435			HDI110S		SHDI140S
0-350 Tourismo Bus			HDI220S	HD220S2/CS	SHDI220S-SHD225S
65-70, 67-70			HDI110S		SHDI140S
DM 636 (1,7 litre marine engine)	ETS74DI-ETS74ND	MAG74D			
MERCURY					
AT 40, AT 46, AT 65 F, AT 65 P, AT 70			HDI110S		SHDI140S
13 M, 13 M 2, 30 M, 30 M 2, 40 M, 40 M 2			HDI110S		SHDI140S
MD 20-30	ETS100D2N	MAG100D			
MD 200			HDI110S		SHDI140S
MD 250-400 (Perkins V8 engine)			246850HD	HD110D2/CS	
MD 300			HDI110S		SHDI140S
MDT 3	ETS100D2N	MAG100D			
20 PD, 30 P, 30 PD	ETS100D2N	MAG100D			

	RUN / ETS / ES	MAGIS	CARGO/WET	CARGO/DRY	CARGO SHD
MERCURY					
32 P			246850HD	HD110D2/CS	
40 P	ETS100D2N	MAG100D			
43 P, 45 P, 46 P, 55 F, 55 P, 65 P, 70 P			HDI110S		SHDI140S
T 3, T 20 T 30	ETS100D2N	MAG100D			
14, 14 ACD, 20 ACD	ETS100D2N	MAG100D			
200, 300			246850HD	HD110D2/CS	
AL 1-ACD	ETS100D2N	MAG100D			
MICHIGAN					
33 C	ETS100D2N	MAG100D			
35, 35 A			HDI143S		SHDI180S
45 C, 55 C			246850HD	HD110D2/CS	
55, 55 A, 55 B, 55-3 (GM engine)			HDI143S		SHDI180S
65, 75, 75 C (Leyland engine)			246850HD	HD110D2/CS	
75 B			HDI110S		SHDI140S
85 (Leyland engine)	ETS100D2N	MAG100D			
85 A, 85 A-2, 95, 95 A-2			HDI143S		SHDI180S
125 B, 175 B			HDI220S	HD220S2/CS	SHDI220S-SHD225S
125 C, 175 C			246850HD	HD110D2/CS	
180			HDI143S		SHDI180S
275 A			HDI220S	HD220S2/CS	SHDI220S-SHD225S
275 B, 275 C			246850HD	HD110D2/CS	
280			HDI220S	HD220S2/CS	SHDI220S-SHD225S
475 C			246850HD	HD110D2/CS	
553 (GM engine)			HDI143S		SHDI180S
7585 Compressor			HDI143S		SHDI180S
AWS 55 (Leyland engine)			246850HD	HD110D2/CS	
L 190, L 270, L 320, L 480			246850HD	HD110D2/CS	
MOXY					
5200			HDI143S		SHDI180S
6200 S			HDI143S		SHDI180S
7235, 7235 B			HDI220S	HD220S2/CS	SHDI220S-SHD225S
D 15			246850HD	HD110D2/CS	
MT 26, MT 30, MT 31			HDI110S		SHDI140S
MT 36, MT 40			HDI220S	HD220S2/CS	SHDI220S-SHD225S
NEUSON					
38 Z3	ETS50D4N				
75 Z3	ETS74DI-ETS74ND	MAG74D			
501 S, 701 S, 701 SP, 803, 1001	ETS50D4N				
1200 RD	ETS60D3N				
1404	ETS50D4N				
1500 RD, 2000 RD	ETS60D3N				
2001, 2203, 2503	ETS50D4N				
2700 RD, 3001	ETS60D3N				
3703	ETS50D4N				

	RUN / ETS / ES	MAGIS	CARGO/WET	CARGO/DRY	CARGO SHD
NEUSON					
5000 RD	ETS100D2N	MAG100D			
5001	ETS74DI-ETS74ND	MAG74D			
6001	ETS100D2N	MAG100D			
6503	ETS74DI-ETS74ND	MAG74D			
9001, 10001	ETS100D2N	MAG100D			
TD 9 (diesel), TD 15, TD 18	ETS74DI-ETS74ND	MAG74D			
TD 9 (petrol)	ETS50D4N				
3003, 3503	ETS50D4N				
8003	ETS74DI-ETS74ND	MAG74D			
12002	ETS100D2N	MAG100D			
NEUSON MHT					
242 HV, 242 HVT	ETS100D2N	MAG100D			
380, 480, 580, 580 T, 680, 750, 750 T, 850, 880, 950, 1150, 3306, 4009, 4107	ETS74DI-ETS74ND	MAG74D			
9002 HV	ETS74DI-ETS74ND	MAG74D			
18002 HVT	ETS100D2N	MAG100D			
NEW HOLLAND					
35-66, 35-66 DT	ETS60D3N-ETS62ND	MAG62D			
40 CA	ETS74DI-ETS74ND	MAG74D			
44-28, 45-66, 45-66 S, 48-05	ETS100D2N	MAG100D			
50 C, 50 CA, 50 CL	ETS74DI-ETS74ND	MAG74D			
50-66, 50-66 S, 54-05, 55-46 (newer types)	ETS100D2N	MAG100D			
55-46 (older types)			HDI143S		SHDI180S
55-65, 55-66, 55-75, 55-76	ETS74DI-ETS74ND	MAG74D			
60-20			HDI143S		SHDI180S
60-56, 60-65, 60-66 (newer types)	ETS100D2N	MAG100D			
60-66 (older types)			HDI143S		SHDI180S
60-66 S (60-66 SDT)			HD132D		
65-66 SDT (70-66 S) (70-66 SDT)			HD132D		
65-90 DT			HDI143S		SHDI180S
60-90 (newer types)	ETS74DI-ETS74ND	MAG74D			
65-66, 65-88, 65-90, 65-94 (newer types)	ETS100D2N	MAG100D			
70			HD105D-246850HD	HD105D2/CS	
70 C, 70 CL	ETS100D2N	MAG100D			
70-65, 70-66, 70-86, 70-88 (newer types)	ETS100D2N	MAG100D			
70-66, 70-86, 70-88 (older types), 70-90			HDI143S		SHDI180S
72-94 DT			HDI110S		SHDI140S
80 CA	ETS100D2N	MAG100D			
80-65, 80-66			HDI143S		SHDI180S
80-66 S DT			HD132D		
80-75, 80-76, 80-88, 80-90 (newer types)	ETS100D2N	MAG100D			
82-86	ETS100D2N	MAG100D			
82-86 LP DT			HD132D		
85-55	ETS74DI-ETS74ND	MAG74D			
90 C (newer types), 90 G	ETS74DI-ETS74ND	MAG74D			

	RUN / ETS / ES	MAGIS	CARGO/WET	CARGO/DRY	CARGO SHD
NEW HOLLAND					
90 C (older types)			HDI110S		SHDI140S
96-30	ETS100D2N	MAG100D			
110-90 DT			HD132D		
115-90			HDI143S		SHDI180S
120 C, 120 G			HDI110S		SHDI140S
130-90, 140-90, 160-90			HDI143S		SHDI180S
180 C, 180 C1			HDI110S		SHDI140S
180-90			HDI143S		SHDI180S
200	ETS100D2N	MAG100D			
211			246850HD	HD110D2/CS	
211 A, 211 R, 211 RB	ETS100D2N	MAG100D			
215, 215 F	ETS100D2N	MAG100D			
250	ETS100D2N	MAG100D			
271, 272	ETS74DI-ETS74ND	MAG74D			
276			246850HD	HD110D2/CS	
300, 300 DT, 312 C, 312 R, 315, 332	ETS100D2N	MAG100D			
350, 350 DT, 352 C, 355, 366	ETS100D2N	MAG100D			
411, 411 R, 415, 420, 420 C, 420 DT	ETS100D2N	MAG100D			
421 A	ETS74DI-ETS74ND	MAG74D			
440-80			HDI143S		SHDI180S
451 C	ETS74DI-ETS74ND	MAG74D			
455			HDI110S		SHDI140S
460, 465 C, 465 CV, 466 (newer types), 466 DT	ETS74DI-ETS74ND	MAG74D			
466 (older types)			HDI143S		SHDI180S
470, 474, 474 E	ETS100D2N	MAG100D			
480-80			HDI143S		SHDI180S
480-80 E, 480-80 V, 481	ETS74DI-ETS74ND	MAG74D			
505, 513 R, 525, 530, 535, 540 (newer types)	ETS100D2N	MAG100D			
540 (older types)			HDI143S		SHDI180S
550 R	ETS100D2N	MAG100D			
565 C, 566 (newer types), 566 DT	ETS74DI-ETS74ND	MAG74D			
566 (older types)			HDI143S		SHDI180S
605 C, 607			HDI110S		SHDI140S
615			HDI220S	HD220S2/CS	SHDI220S-SHD225S
632, 634, 636, 637, 638			HDI110S		SHDI140S
640			HDI143S		SHDI180S
647			HDI110S		SHDI140S
650			HDI220S	HD220S2/CS	SHDI220S-SHD225S
666			HDI143S		SHDI180S
680, 680 H			HDI143S		SHDI180S
715, 715 DT			HDI110S		SHDI140S
745 HB			HDI220S	HD220S2/CS	SHDI220S-SHD225S
780			HDI143S		SHDI180S
818, 903, 907	ES70540D				
821 L, 850 C, 850 DT (older types)			HDI143S		SHDI180S
850			HDI220S	HD220S2/CS	SHDI220S-SHD225S
880			HDI143S		SHDI180S

	RUN / ETS / ES	MAGIS	CARGO/WET	CARGO/DRY	CARGO SHD
NEW HOLLAND					
900			HDI220S	HD220S2/CS	SHDI220S-SHD225S
945			HDI220S	HD220S2/CS	SHDI220S-SHD225S
946			246850HD	HD110D2/CS	
980			HDI143S		SHDI180S
1000 S			HDI220S	HD220S2/CS	SHDI220S-SHD225S
1118			246850HD	HD110D2/CS	
1180			HDI143S		SHDI180S
1180 DT, 1180 DTH			HDI110S		SHDI140S
1300 Super			HDI220S	HD220S2/CS	SHDI220S-SHD225S
1300, 1300 S			HDI220S	HD220S2/CS	SHDI220S-SHD225S
1380, 1500 (older types)			HDI143S		SHDI180S
1500 F, 1520 F, 1530 F, 1540 F, 1545 F	ETS100ND				
1550, 1770	ETS74ND-ETS74DI				
1580 AL	ETS92ND-ETS100D2N	MAG100D			
1770			246850HD	HD110D2/CS	
1800			HD105D-246850HD	HD105D2/CS	
1880, 1880 DT			HDI143S		SHDI180S
1890, 1895, 1900, 1905	ETS100D2N	MAG100D			
1900	ETS100ND				
2000 (Gear box), 2100	ETS100D2N	MAG100D			
2000, 3000	ETS100D2N	MAG100D			
2200, 2205	ETS100D2N	MAG100D			
2261 E, 2262 E, 2263 E, 2264 E, 2265 E	ETS50D4N				
2305, 2405, 2502 E, 2503 E, 2504, 2511 E, 2512 E, 2513 E	ETS100D2N	MAG100D			
8030, 8040	ETS92ND				
8050, 8060, 8060 I	ETS74ND-ETS74DI				
2600	ETS100D2N	MAG100D			
2601 E, 2602 E, 2603 E, 2604 E	ETS50D4N				
3000 (Gear box)	ETS74DI-ETS74ND	MAG74D			
3430			246850HD	HD110D2/CS	
3600	ETS100D2N	MAG100D			
3790, 3900, 3910			HDI143S		SHDI180S
3930			246850HD	HD110D2/CS	
4130			246850HD	HD110D2/CS	
4630			246850HD	HD110D2/CS	
4635	ETS100D2N	MAG100D			
4830			246850HD	HD110D2/CS	
4835 (older types)	ETS100D2N	MAG100D			
5010			246850HD	HD110D2/CS	
5610, 5635	ETS100D2N	MAG100D			
5640			246850HD	HD110D2/CS	
6635	ETS100D2N	MAG100D			
6640			246850HD	HD110D2/CS	
7635	ETS100D2N	MAG100D			
7740 (newer types)			246850HD	HD110D2/CS	
7835	ETS100D2N	MAG100D			

	RUN / ETS / ES	MAGIS	CARGO/WET	CARGO/DRY	CARGO SHD
NEW HOLLAND					
7840			246850HD	HD110D2/CS	
8030, 8040, 8050, 8052	ETS100D2N	MAG100D			
8070, 8070 I, 8080, 8080 I	ETS92ND				
8160 (newer types)	ETS100D2N	MAG100D			
8160 (older types)			HDI110S		SHDI140S
8240			246850HD	HD110D2/CS	
8260 (newer types)	ETS60D3N				
8260 (older types)			HDI110S		SHDI140S
8340			246850HD	HD110D2/CS	
8360 (newer types)	ETS60D3N				
8360 (older types)			HDI110S		SHDI140S
8360, 8670, 8970	ETS100ND				
8544 B, 8560 (newer types)	ETS100D2N	MAG100D			
8560 (older types)			HDI110S		SHDI140S
8670 (older types)			HDI220S	HD220S2/CS	SHDI220S-SHD225S
8670 A			HDI220S	HD220S2/CS	SHDI220S-SHD225S
8770 (older types)			HDI220S	HD220S2/CS	SHDI220S-SHD225S
8770 A			HDI220S	HD220S2/CS	SHDI220S-SHD225S
8870 (older types)			HDI220S	HD220S2/CS	SHDI220S-SHD225S
8870 A			HDI220S	HD220S2/CS	SHDI220S-SHD225S
8970 (older types)			HDI220S	HD220S2/CS	SHDI220S-SHD225S
8970 A			HDI220S	HD220S2/CS	SHDI220S-SHD225S
A 55, A 55 LM, A 55 S			HDI143S		SHDI180S
A 65 LM			HDI143S		SHDI180S
AD 4, AD 5, AD 7, AD 8	ETS74DI-ETS74ND	MAG74D			
AD 10, AD 14			HDI143S		SHDI180S
BD 8	ETS74DI-ETS74ND	MAG74D			
BIM 12, BIM 15, BIM 20, BIM 25, BIM 120	ETS100D2N	MAG100D			
BJ 12, BJ 15, BJ 20	ETS100D2N	MAG100D			
BM 12, BM 15	ETS100D2N	MAG100D			
CR, CS, CX	ETS100D2N	MAG100D			
DIM 12, DIM 15, DIM 20, DIM 25	ETS100D2N	MAG100D			
DJ 20, DJ 25	ETS100D2N	MAG100D			
DM 12, DM 15	ETS100D2N	MAG100D			
DT			HDI110S		SHDI140S
F 100 DT, F 110 DT, F 130 DT, F 140 DT			HDI110S		SHDI140S
F 100, F 110, F 115, F 120, F 130, F 140			HDI143S		SHDI180S
FL 6	ETS100D2N	MAG100D			
FR 8	ETS100D2N	MAG100D			
FR 15, FR 15 B, FR 20			246850HD	HD110D2/CS	
FX 58, 375	ETS92ND				
FX 58, FX 300, FX 375, FX 450	ETS100D2N	MAG100D			
G 190			HD120S	HD120S2/CS	
G 210, G 240			HDI220S	HD220S2/CS	SHDI220S-SHD225S
L 518, 627			HD155D	HD160D2/CS	
L 60 (older types)	ETS100D2N	MAG100D			
L 65, L 75 (older types)	ETS100D2N	MAG100D			

	RUN / ETS / ES	MAGIS	CARGO/WET	CARGO/DRY	CARGO SHD
NEW HOLLAND					
L 225	ETS50D4N				
L 350	ETS100D2N	MAG100D			
L 521			HDI143S		SHDI180S
L 553			246850HD	HD110D2/CS	
L 783, L 785			246850HD	HD110D2/CS	
LB 110, LB 115, LB 115 B	ETS100D2N	MAG100D			
LM 1440	ETS100D2N	MAG100D			
LM 410, LM 420, LM 430, LM 630, LM 640			HDI143S		SHDI180S
LS 140, LS 150, LS 160, LS 170, LS 180			246850HD	HD110D2/CS	
LX 465, LX 565, LX 665, LX 875, LX 885			246850HD	HD110D2/CS	
M 60	ETS100D2N	MAG100D			
M 84			HDI143S		SHDI180S
M 100, M 110	ETS100D2N	MAG100D			
M 115	ETS100D2N	MAG100D			
M 120			HDI143S		SHDI180S
M 135, M 150	ETS100D2N	MAG100D			
M 160			HD120S	HD120S2/CS	
M 160 (newer types)	ETS100D2N	MAG100D			
M 160 (older types)			HDI110S		SHDI140S
M 182			HDI143S		SHDI180S
S 1540 AL, S 1550, S 1800, S 1805, S 1900, S 1905, S 2305, S 2405	ETS100D2N	MAG100D			
T 3010, T 3020, T 3030, T 3040	ETS60D3N				
T 3010 (3020) (3030) (3040) '07→	ETS60D3N-ETS62ND	MAG62D			
T 4020 (4030) (4040) (4050) '08→	ETS100ND				
T 4030 F (4040 F) (4050 F) '08→	ETS100ND				
T 5030 (5040) (5050) '08→			HD132D		
T 6010 (6020) (6030) (6040) (6050) (6060) (6070) (6080) '08→			HD132D		
T 7030 (7040) (7050) (7060) '08→			HD180S	HD180S2/CS-HD200S2/CS	
T 7030, T 7040, T 7050, T 7060			HDI143S		SHDI180S
T 7520 (7530) (7540) (7550) '08→			HD180D	HD180D2/CS	
T 8050, T 8066, T 8070 AL, T 8080	ETS74DI-ETS74ND	MAG74D			
TC 52, TC 54	ETS100D2N	MAG100D			
TCE 40, TCE 45, TCE 50, TCE 55	ETS60D3N				
TCE 40 (45) (50) (55) → '06	ETS60D3N-ETS62ND	MAG62D			
TD 75 D, TD 85 D, TD 95 D			HDI110S		SHDI140S
TDD 75 (85) (95) DT			HD105D	HD105D2/CS	
TF 24, TF 32, TF 34, TF 36, TF 42, TF 44, TF 46, TF 76, TF 78, TF 366	ETS100D2N	MAG100D			
TL 70, TL 80, TL 90 (older types)	ETS100D2N	MAG100D			
TL 70, 80, 90, 100 (DT)			HD132D		
TL-A 70 (80) (90) (100)			HD132D		
TM 115, 125, 135, 150, 165 (DT)	ETS92ND				
TM 120			HDI143S		SHDI180S
TM 120 (130) (140)			HD180S	HD180S2/CS-HD200S2/CS	

	RUN / ETS / ES	MAGIS	CARGO/WET	CARGO/DRY	CARGO SHD
NEW HOLLAND					
TM 125 (newer types), TM 125 DT	ETS100D2N	MAG100D			
TM 125 (newer types), TM 125 DT	ETS100D2N	MAG100D			
TM 130			HDI143S		SHDI180S
TM 135 (newer types)	ETS100D2N	MAG100D			
TM 135 (older types)			HDI110S		SHDI140S
TM 140			HDI143S		SHDI180S
TM 150 (newer types)	ETS100D2N	MAG100D			
TM 150 (older types)			HDI110S		SHDI140S
TM 155 (175) (190)			HD180S	HD180S2/CS-HD200S2/CS	
TN 55, 65, 70, 75, 90 (DT)	ETS92ND-ETS100D2N	MAG100D			
TN 65 D, 75 S, 90 F	ETS92ND				
TN 75 SA, TN 75 V, TN 80 F, TN 90 DT, TN 90 F	ETS100D2N	MAG100D			
TNF-A 75 (85) (95)	ETS100ND				
TNN-A 70 (75) (95)	ETS100ND-ETS100D2N				
TNV-A 60 (70) (75) (95)	ETS100ND-ETS100D2N				
TR 70			246850HD	HD110D2/CS	
TR 85			HDI110S		SHDI140S
TR 85			HD120S	HD120S2/CS	
TS 100, 110, 115			HD105D	HD105D2/CS	
TS-A 100			HD155S	HD160S2/CS	
TS-A 100, Other newer TS-A			HDI143S		SHDI180S
TS-A 110 (115) (125) (135) DT ACTIVE ELECTRO C.			HD105D	HD105D2/CS	
TV 140			HD125D	HD125D2/CS	
TX 30, 34, 56, 62, 64 PLUS,	ETS92ND				
TX 30, TX 32, TX 34, TX 36, TX 38, TX 42, TX 44, TX 46, TX 56, TX 58	ETS100D2N	MAG100D			
TX 62, TX 64, TX 64 Plus, TX 65, TX 66, TX 67, TX 68, TX 68 Plus	ETS100D2N	MAG100D			
TX 65, 67, 68, 68 PLUS	ETS92ND				
ORENSTEIN & KOPPEL					
DE 26, DE 100			HDI143S		SHDI180S
DFGV 26, DFGV 30, DFGV 40, DFGV 50, DFGV 60, DFGV 80	ETS100D2N	MAG100D			
G 12			HDI110S		SHDI140S
L 4, L 6, L 10, L 15, L 16, L 20, L 25 (newer types)	ETS100D2N	MAG100D			
MH 3	ETS74DI-ETS74ND	MAG74D			
MH 4, MH 6 (older types)			HDI110S		SHDI140S
MH 6 (newer types)	ETS74DI-ETS74ND	MAG74D			
MH 9, MH 12, MH 14, MH 18, MH 25, MH 122			HDI110S		SHDI140S
MH 374, MH 376	ETS100D2N	MAG100D			
RH 3, RH 35 L	ETS74DI-ETS74ND	MAG74D			
RH 6 (newer types)	ETS74DI-ETS74ND	MAG74D			
RH 12, RH 14, RH 18, RH 25, RH 35			HDI143S		SHDI180S
RH 60, RH 70, RH 75			HDI220S	HD220S2/CS	SHDI220S-SHD225S
RH 122			HDI110S		SHDI140S
RH 374, RH 376	ETS100D2N	MAG100D			

	RUN / ETS / ES	MAGIS	CARGO/WET	CARGO/DRY	CARGO SHD
P & H					
RT 180, RT 200			HDI220S	HD220S2/CS	SHDI220S-SHD225S
T 750			HDI220S	HD220S2/CS	SHDI220S-SHD225S
W 250, W 350			HDI220S	HD220S2/CS	SHDI220S-SHD225S
PASQUALI					
406	ES45330S				
409	ETS50D4N				
439, 440, 446, 451	ETS60D3N				
439, 440	ETS100ND				
446, 451	ETS60D3N-ETS62ND	MAG62D			
453, 455	ETS100ND				
456	ETS60D3N-ETS62ND	MAG62D			
457	ETS100ND				
464, 467, 470, 485	ETS100ND				
487, 488	ETS60D3N-ETS62ND	MAG62D			
492, 494, 497	ETS100ND				
917.20, 917.21	ES45330S				
941, 944, 945, 946	ETS60D3N-ETS62ND	MAG62D			
947, 951	ETS74DI-ETS100ND				
955, 956	ETS60D3N-ETS62ND	MAG62D			
957	ETS100ND				
959	ETS60D3N-ETS62ND	MAG62D			
965, 970	ETS100ND				
971	ETS60D3N-ETS62ND	MAG62D			
976, 978, 979	ETS100ND				
985, 986	ETS60D3N-ETS62ND	MAG62D			
987	ETS100ND				
988, 990	ETS60D3N-ETS62ND	MAG62D			
991	ETS100ND				
992, 993, 995	ETS60D3N-ETS62ND	MAG62D			
996, 997	ETS100ND				
CRONOS 7.65	ETS100ND				
CRONOS 7.85	ETS100ND				
EOS 5,50 AR Mono	ES70540S				
EOS 6,50	ETS74ND-ETS74DI				
ERA 9.30 (9.40) DT	ES45330D				
ERGO 5.60, 5.80 (Mono)	ETS100ND				
ERGO 6.60, 6.80 (Mono)	ETS100ND				
ERGO 8.80 S2 REV (Hm)	ETS100ND				
MARS 7.70 (7.80) (7.90) AR Mono	ETS100ND				
MARS 8.70 (8.80) (8.90) RS Mono	ETS100ND				
LAWN & GARDEN TRACTORS 95640, 95641	ETS45ND	MAG45D			
WALKING TRACTORS 941, 946	ETS45ND	MAG45D			
TRACTORS 956, 991	ETS100ND				
LAWN & GARDEN TRACTORS 945, 955, 985, 990, 992, 995	ETS45ND	MAG45D			
VANTH 5.30, 6.30 (Mono)	ES45330D				
VANTH 5.40, 6.40 (Mono)	ES45330D				

	RUN / ETS / ES	MAGIS	CARGO/WET	CARGO/DRY	CARGO SHD
POCLAIN					
60, 60 C, 60 CL, 60 P			HDI110S		SHDI140S
75 C, 75 P			HDI143S		SHDI180S
90 C, 90 P, 115 C, 115 P			HDI143S		SHDI180S
160, 160 C			HDI143S		SHDI180S
888			HDI110S		SHDI140S
2500, 3000	ETS74DI-ETS74ND	MAG74D			
GC Other types			HDI110S		SHDI140S
MC Other types			HDI143S		SHDI180S
MY			HDI110S		SHDI140S
P 10, P 20, P 60			HDI110S		SHDI140S
SC			HDI143S		SHDI180S
PORSCHE					
218, 419	ETS100D2N	MAG100D			
AP 16, AP 17, AP 18, AP 22, AR 22	ETS74DI-ETS74ND	MAG74D			
P 111	ETS74DI-ETS74ND	MAG74D			
PROPERMAT					
KS 55, KS 57			HDI143S		SHDI180S
PSE	ETS60D3N				
RAMMAX					
2200, 2400, Other Compactor	ETS74DI-ETS74ND	MAG74D			
RW 2200, RW 2400	ETS74DI-ETS74ND	MAG74D			
RAPID					
Alltrac 1800, 1900, 2500, Alltrac AC 300, AC 2000, Cargo-Trac	ETS74DI-ETS74ND	MAG74D			
Maehtraktor MT 250, MT 3000	ETS100D2N	MAG100D			
Rapid Special	ETS60D3N				
3 Series, 5002	ETS74DI-ETS74ND	MAG74D			
RENAULT AGRICOLTURE					
2 D	ETS100D2N	MAG100D			
32-44, 32-50, 32-50 F, 32-50 SV, 32-50 V, 32-60, 32-60 F, 32-60 V, 32-70	ETS100D2N	MAG100D			
32.50 SV, 34.60 V	ETS92ND				
34-60, 34-60 V, 42-70, 42-70 F, 42-70 V, 44-70	ETS74DI-ETS74ND	MAG74D			
50, 50 S	ETS100D2N	MAG100D			
50-12, 50-12 V, 55-12, 55-12 F, 55-12 V, 55-14, 55-14 V	ETS100D2N	MAG100D			
58-12, 58-12 LS, 58-14, 58-14 LS, 58-32, 58-34			246850HD	HD110D2/CS	
58.12 (58.14) LS			HD105D	HD105D2/CS	
60, 60 S	ETS100D2N	MAG100D			
65-12, 65-12 LS, 65-14, 65-14 LS			246850HD	HD110D2/CS	
65.12 (65.14) LS			HD105D	HD105D2/CS	
65-12, 65-12 LS, 65-14, 65-14 LS			246850HD	HD110D2/CS	
65-32, 65-34	ETS100D2N	MAG100D			

	RUN / ETS / ES	MAGIS	CARGO/WET	CARGO/DRY	CARGO SHD
RENAULT AGRICOLTURE					
65, 70, 70 X, 75, 75 X, 85, 85 X, 95, 95 X			246800.1HD		
65-2, 65-4, 70-2, 70-4, 75-4, 85-2, 85-4, 95-4	ETS100D2N	MAG100D			
68 RS			246850HD	HD110D2/CS	
70, 70 S, 70-12, 70-12 F, 70-12 V, 70-14, 70-14 F, 70-14 V	ETS100D2N	MAG100D			
72-12 TS	ETS74DI-ETS74ND	MAG74D			
75 RS			246850HD	HD110D2/CS	
80, 80 S Verger, 80 Vigneron	ETS100D2N	MAG100D			
80.12, 80.14F	ETS92ND				
80-14 LB			HDI143S		SHDI180S
85, 95, 105, 350			246800.1HD		
82, 85, 90, 90 S, 90 S Verger, 90 S Vigneron, 95	ETS74DI-ETS74ND	MAG74D			
95-12 TX, 95-14 TX	ETS100D2N	MAG100D			
103 TX			246850HD	HD110D2/CS	
106-14, 106-14 SP, 106-54, 106-54 TL, 108			HDI143S		SHDI180S
106.54, 110.14, 110.54			HD155S	HD160S2/CS	
110-14, 110-14 RE, 110-14 TA, 110-14 TE, 110-14 TS, 110-14 TX			HDI143S		SHDI180S
113-12, 113-14	ETS100D2N	MAG100D			
120-14, 120-14 RE, 120-14 TA, 120-14 TE, 120-14 TS, 120-14 TX, 120-14 TZ			HDI143S		SHDI180S
120-54, 120-54 TA, 120-54 TE, 120-54 TS, 120-54 TX, 120-54 TZ			HDI143S		SHDI180S
133-12	ETS100D2N	MAG100D			
133-12 TS, 133-12 TX			HDI143S		SHDI180S
133-14, 133-14 RE, 133-14 TA, 133-14 TE, 133-14 TS, 133-14 TX, 133-14 TZ			HDI143S		SHDI180S
133.54			HD155S	HD160S2/CS	
133-54, 145-14, 145-14 RE, 145-14 TA, 145-14 TE, 145-14 TX, 145-14 TZ			HDI143S		SHDI180S
145.14, 145.54, 155.54			HD155S	HD160S2/CS	
145-54, 145-54 RE, 145-54 TA, 145-54 TE, 145-54 TX, 145-54 TZ			HDI143S		SHDI180S
155 Nectra, 155-54, 155-54 TA, 155-54 TE, 155-54 TX, 155-54 TZ, 160-94			HDI143S		SHDI180S
160.94, 175.74			HD155S	HD160S2/CS	
175-74, 175-74 TZ, 180-94			HDI143S		SHDI180S
301, 321	ETS100D2N	MAG100D			
320, 325, 330, 335, 335 X, 340, 340 X, 345, 345 X, 355, 355 X			246800.1HD		
321-4			246850HD	HD110D2/CS	
330, 335, 340, 345, 350, 355			246800.1HD		
351, 361, 421, 421 M	ETS100D2N	MAG100D			
451-4			246850HD	HD110D2/CS	
460, 460 S, 461, 461 M, 461 S, 462, 466, 466 S, 480, 480 S, 490, 490 S	ETS100D2N	MAG100D			
500, 500-II, 506, 507 ATX, 507 ATZ			246850HD	HD110D2/CS	

	RUN / ETS / ES	MAGIS	CARGO/WET	CARGO/DRY	CARGO SHD
RENAULT AGRICOLTURE					
501-4, 521, 521 S, 551, 551 S, 551-4, 551-4 S, 556	ETS100D2N	MAG100D			
540 RX, 546 RX, 546 RZ, 550 RX, 556 RX, 556 RZ, 566 RX, 566 RZ			HDI143S		SHDI180S
550, 550 X, 560			246850HD	HD110D2/CS	
600 M	ETS100D2N	MAG100D			
605			246850HD	HD110D2/CS	
610 RX, 610 RZ, 616 TX, 616 RZ, 617, 620 RX, 620 RZ, 626 RX, 626 RZ			HDI143S		SHDI180S
610, 610 X, 610 Z, 630, 630 X, 630 Z, 650 X, 650 Z, 6 Cylinders			HDI143S		SHDI180S
630 RX, 630 RZ, 636 RZ, 640 RZ, 656 RZ, 657, 696 RZ, 697			HDI143S		SHDI180S
710 RZ, 715 RZ, 720 RZ, 725 RZ, 735 RZ			HDI143S		SHDI180S
750	ETS100D2N	MAG100D			
800 M, 851	ETS100D2N	MAG100D			
810, 850			HDI143S		SHDI180S
815 RZ, 816, 825 RZ, 826, 835 RZ, 836			HDI143S		SHDI180S
904 MO, 951	ETS100D2N	MAG100D			
926 RZ, 936 RZ			HDI143S		SHDI180S
ARES 500			HD105D	HD105D2/CS	
ARES 540 (550) RX			HD180S	HD180S2/CS-HD200S2/CS	
ARES 546 (556) (566) RX, RZ			HD180S	HD180S2/CS-HD200S2/CS	
ARES 610 (620) (630) RX, RZ			HD180S	HD180S2/CS-HD200S2/CS	
ARES 616 (626) RX, RZ			HD180S	HD180S2/CS-HD200S2/CS	
ARES 636 (640) RZ			HD180S	HD180S2/CS-HD200S2/CS	
ARES 656 (696) RZ			HD180S	HD180S2/CS-HD200S2/CS	
ARES 710 (720) RZ			HD180S	HD180S2/CS-HD200S2/CS	
ARES 816 (826) (836)			HD180S	HD180S2/CS-HD200S2/CS	
ARION			HDI143S		SHDI180S
ATLES 926 (936) RZ			HD180S	HD180S2/CS-HD200S2/CS	
CELTIS, DIONIS 110, 120, 130, 140, S VERGER			246850HD	HD110D2/CS	
CERES 320 (330)			HD105D	HD105D2/CS	
CERES 325 (335) (345) (355)			HD105D	HD105D2/CS	
CERES 325 (335) X			HD105D	HD105D2/CS	
CERES 340 X			HD105D	HD105D2/CS	
CERES 345 (355) X			HD105D	HD105D2/CS	
CERGOS 335 (345)			HD105D	HD105D2/CS	
CERGOS 340 (350)			HD105D	HD105D2/CS	
CERGOS 355			HD105D	HD105D2/CS	
DIONIS 110 (120) (130) (140)	ETS100ND				
ERGOS 85 (95) (105)			HD105D	HD105D2/CS	
ET 77, ET 78, ET 82			HDI143S		SHDI180S
FRUCTUS 120 (130) (140)	ETS100ND				
PALES 210 (230) (240)	ETS100ND				
R 32-50 SV, R 32-60 V, R 34-60 V, R 50 S	ETS100D2N	MAG100D			
R 460, R 460 S, R 461, R 461 S, R 462, R 480 , R 480 S, R 482 S	ETS100D2N	MAG100D			

	RUN / ETS / ES	MAGIS	CARGO/WET	CARGO/DRY	CARGO SHD
RENAULT AGRICOLTURE					
R 460, 461, 462, 480 , 482 S	ETS92ND				
R 521, R 551-4 S, R 556	ETS100D2N	MAG100D			
R 904 MO	ETS100D2N	MAG100D			
TEMIS 550 X			HD105D	HD105D2/CS	
TEMIS 560			HD105D	HD105D2/CS	
TEMIS 610 (630) (650) X			HD180S	HD180S2/CS-HD200S2/CS	
RHEINSTAHL HANOMAG					
10 E	ETS100D2N	MAG100D			
18 K, 20 D			HDI143S		SHDI180S
20 E, 22 C	ETS100D2N	MAG100D			
44 C, 44 E, 50 E, 55 C, 66 C			HDI110S		SHDI140S
70 E			HDI143S		SHDI180S
112 C, 218 C, 300, 401	ETS100D2N	MAG100D			
442 C, 800			HDI143S		SHDI180S
B 6	ETS74DI-ETS74ND	MAG74D			
B 8			HDI143S		SHDI180S
B 11, B 14 C			HDI110S		SHDI140S
B 16			HDI143S		SHDI180S
Brillant 600, 601, 701, 332			HDI110S		SHDI140S
Granit 500, 501	ETS100D2N	MAG100D			
K 7, K 8			HDI143S		SHDI180S
K 10			HDI220S	HD220S2/CS	SHDI220S-SHD225S
K 11, K 12 C			HDI143S		SHDI180S
K 14, K 16			HDI220S	HD220S2/CS	SHDI220S-SHD225S
K 28			HDI143S		SHDI180S
Perfekt 301, 400	ETS100D2N	MAG100D			
R 12, R 16	ETS100D2N	MAG100D			
R 24	ETS100D2N	MAG100D			
R 35			HDI143S		SHDI180S
R 40, R 45, R 217, R 224	ETS100D2N	MAG100D			
R 435			HDI143S		SHDI180S
R 460	ETS100D2N	MAG100D			
SAMBRON					
AM 10			HDI143S		SHDI180S
AM 22	ETS100D2N	MAG100D			
AM 32, AM 34			246850HD	HD110D2/CS	
AM 44			HDI143S		SHDI180S
AM 252	ETS100D2N	MAG100D			
AM 354			HDI143S		SHDI180S
AM 425 H, AM 430 H	ETS100D2N	MAG100D			
BCY, BSY, BW			246850HD	HD110D2/CS	
BY	ETS100D2N	MAG100D			
D 18, GC 20, Other GC			246850HD	HD110D2/CS	
GD	ETS100D2N	MAG100D			

	RUN / ETS / ES	MAGIS	CARGO/WET	CARGO/DRY	CARGO SHD
SAMBRON					
GE 20, HD 10, HD 18			246850HD	HD110D2/CS	
JAG 24			246850HD	HD110D2/CS	
S 25	ETS100D2N	MAG100D			
SAME					
50, 50 DT, 60, 60 DT, 70, 70 DT	ETS100D2N	MAG100D			
60, 70	ETS100D2N	MAG100D			
45			246850HD	HD110D2/CS	
55 (newer types)			246850HD	HD110D2/CS	
70, 75 (older types)			HDI143S		SHDI180S
70, 75 (older types)			HDI143S		SHDI180S
70 (older types), 70 Special, 75, 75 Special, 75 T, 75 TB	ETS100D2N	MAG100D			
80 Special, 90 Special, 95 Special	ETS100D2N	MAG100D			
80, 90 (newer types)			HDI143S		SHDI180S
105 T FORMULA	ETS92ND				
110, 130			HDI143S		SHDI180S
265	ES70540S				
All Vigneto, Other ATLANTA	ETS100D2N	MAG100D			
All Vigneto, Other AURORA	ETS100D2N	MAG100D			
ANTARES 100	ETS92ND				
ANTARES 110, 130			HD120D	HD120D2/CS	
ANTARES 150			HD155D	HD160D2/CS	
ARGON 50 (50 DT) (60) (60 DT) (70) (70 DT)	ETS92ND				
Argon Classic 55 (70)	ETS100ND				
ARGON F 55 (65) (75)	ETS100ND				
Argon F Classic 55 (70)	ETS100ND				
ASTER 60, 70	ETS100ND				
AURORA 45	ETS100ND				
BUFALO 120, 130 DT			HD155D	HD160D2/CS	
CENTURIUM 75 E, S, SDT	ETS100ND				
CONDOR 55	ETS100ND				
DA 12	ETS92ND				
DA 12, DA 20, DA 25, DA 25 DT, DA 30, DA 30 DT	ETS100D2N	MAG100D			
DELFINO 35	ETS100ND				
DELFINO 35 CKD	ETS74ND-ETS74DI				
DORADO DT 55 (75) (85)	RUN95D				
DORADO 65 DT	ETS100ND				
Dorado F 70 (75) (90) (100)	RUN95D				
Dorado S 70 (75) (90) (100)	RUN95D				
DRAGO			HD155D	HD160D2/CS	
DRAGON	ETS92ND				
EXPLORER 65, 65 C, 75	ETS100ND				
EXPLORER 70, 80, 90 (C Erg.)	ETS100ND				
Explorer T 75 (85) (95)	ETS100ND				
Explorer TB 75 (85) (95)	ETS100ND				
Explorer-3 85 (100)	RUN95D				

	RUN / ETS / ES	MAGIS	CARGO/WET	CARGO/DRY	CARGO SHD
SAME					
FOX 35, 45, 55	ETS100ND				
FRUTTETO 60, 70, 75, 85	ETS100ND				
FRUTTETO II 55 (70) (75) (90) (100)	ETS100ND				
FRUTTETO II 60 DT (85 DT)	ETS100ND				
GALAXI 170			HD180D	HD180D2/CS	
GOLDEN 60 (65) (75) (85) DT	RUN95D				
HERCULES 160 DT			HD180D	HD180D2/CS	
IRON 175 S (190 S)			HD155D	HD160D2/CS	
Iron 100 (110) (120)			HD155D	HD160D2/CS	
Iron 130 (140) (160) (175 (185)			HD180S	HD180S2/CS-HD200S2/CS	
Iron Continuo 150.7 (165.7)			HD180S	HD180S2/CS-HD200S2/CS	
JAGUAR 95 DT, EDT			HD120D	HD120D2/CS	
KRIPTON 80, 90, 100			HD120D	HD120D2/CS	
Krypton F 90 (100)	ETS100ND				
Krypton V 70 (80)	ETS100ND				
LASER 50, 110, 130			HD155D	HD160D2/CS	
LASER 85, 90, 100			HD120D	HD120D2/CS	
LASER 150			HD180D	HD180D2/CS	
LEOPARD 85, D, EDT, TE			HD120D	HD120D2/CS	
MINITAURUS 60			HD120D	HD120D2/CS	
Other BUFFALO	ETS100D2N	MAG100D			
Other PANTHER			HDI110S		SHDI140S
PANTHER 90, 95 DT			HD120D	HD120D2/CS	
RANGER 45	ETS74ND-ETS74DI				
ROCK 55, 60 (C Wheeled)	ETS100ND				
ROCK 70	ETS100ND				
ROW CROP 100.6			HD155D	HD160D2/CS	
RUBIN 120, 135 DT			HD155D	HD160D2/CS	
RUBIN 150, 160, 180, 200 (DT) (Galileo)			HD155D	HD160D2/CS	
SILVER 80 (90) DT			HD120D	HD120D2/CS	
SILVER 85 ,95			HD120D	HD120D2/CS	
SILVER 100.4 DT			HD120D	HD120D2/CS	
SILVER 100.6 DT			HD155D	HD160D2/CS	
SILVER 105 (110)			HD155D	HD160D2/CS	
SILVER 115, 130 (DT)			HD155D	HD160D2/CS	
SIRENETTA	ETS100ND				
SOLAR 50, C55, 60, C60, C70	ETS100ND				
SOLAR C80, C90	ETS100ND				
SOLARIS 25 HYDRO	ETS74ND-ETS74DI				
SOLARIS 35 (35 HD) (35 WIND)	ETS74ND-ETS74DI				
SOLARIS 45, 45 II, WIND	ETS74ND-ETS74DI				
Solaris 55	ETS74ND-ETS74DI				
SUPERTITAN			HD180D	HD180D2/CS	
TIGER			HD155D	HD160D2/CS	
TITAN II 150, 165, 190			HD180D	HD180D2/CS	

	RUN / ETS / ES	MAGIS	CARGO/WET	CARGO/DRY	CARGO SHD
SAME					
TRIDENT 130			HD120D	HD120D2/CS	
VIGNERON 60, 75	ETS100ND				
SCHLUTER					
25	ETS100D2N	MAG100D			
750 Compact, 850 Compact, 950 T Compact	ETS74DI-ETS74ND	MAG74D			
750, 850, 850 Super, 1050	ETS100D2N	MAG100D			
1050 T Compact	ETS74DI-ETS74ND	MAG74D			
1050, 1050 Super	ETS100D2N	MAG100D			
1250, 1250 Super, 1250 LS, 1250 V, 1250 VL, 1250 T Compact	ETS100D2N	MAG100D			
1300 VL, 1350 E, 1500 LS, 1500 TVL, 1500 Super, 1600, 1600 Super, 1600 VL	ETS100D2N	MAG100D			
1700, 1700 LS, 1700 TVL, 1800, 1800 LS, 1800 Super, 1800 TVL	ETS100D2N	MAG100D			
1900, 1900 LS, 1900 TVL	ETS100D2N	MAG100D			
2200 LS, 2200 TVL, 2500 LS, 2500 VL, 2500 TVL			HDI143S		SHDI180S
300 TVL, 3000, 3000 TVL			HDI143S		SHDI180S
8000 E, 9500 E	ETS100D2N	MAG100D			
AS 22, AS 30, AS 160, AS 180, AS 261	ETS100D2N	MAG100D			
E 2500 VL, E 3000, E 6600, E 7200, E 7800, E 8000, E 9500	ETS100D2N	MAG100D			
E 4000, E 5000 V	ETS74DI-ETS74ND	MAG74D			
S 15, SF 30	ETS100D2N	MAG100D			
SCHMIDT					
HF 2			HDI110S		SHDI140S
SK 310, SKS 150, SKS 250	ETS74DI-ETS74ND	MAG74D			
VF 311			HDI110S		SHDI140S
SHIBAURA					
8300, 8340			HDI110S		SHDI140S
SD 454-0			246850HD	HD110D2/CS	
SE 4040			246850HD	HD110D2/CS	
SP 604-0			246850HD	HD110D2/CS	
STAVOSTROJ					
KNB 250			HDI143S		SHDI180S
KTO 300			HDI143S		SHDI180S
RN 030			HDI110S		SHDI140S
SFS 100			HDI143S		SHDI180S
TLN 030			HDI110S		SHDI140S
VP 200 Standard			HDI143S		SHDI180S
VP 200 Torpedo			HDI110S		SHDI140S
VSH 61 W			HDI110S		SHDI140S
VSH 100			HDI143S		SHDI180S
VSH 102 W, VSH 150			HDI110S		SHDI140S

	RUN / ETS / ES	MAGIS	CARGO/WET	CARGO/DRY	CARGO SHD
STAVOSTROJ					
VSH 300, VSH 400	ETS74DI-ETS74ND	MAG74D			
W 71, W 110, W 112, W 113, W 170			HDI110S		SHDI140S
W 500 D, W 500 PD			HDI143S		SHDI180S
W 900 D			HDI110S		SHDI140S
W 1100, W 1500	ETS100D2N	MAG100D			
ZV 1500			HDI110S		SHDI140S
STEYR					
15, 18	ETS74DI-ETS74ND	MAG74D			
18 B, 18 N			246850HD	HD110D2/CS	
30 N, 40 A			HDI110S		SHDI140S
70			HDI143S		SHDI180S
83 TK			HDI110S		SHDI140S
90 A			HDI110S		SHDI140S
185	ETS100D2N	MAG100D			
188, 190, 190 Tractor	ETS100D2N	MAG100D			
190 S			HDI110S		SHDI140S
280	ETS100D2N	MAG100D			
540, 545, 548			HD120S	HD120S2/CS	
540, 545			HDI110S		SHDI140S
548, 590			HDI110S		SHDI140S
650, 658, 760, 768	ES70540D				
658	ETS60D3N				
760 Super, 768	ETS60D3N				
870			HD155S	HD160S2/CS	
870			HDI110S		SHDI140S
875	ETS92ND				
980, 988			HD155S	HD160S2/CS	
8045, 8055	ETS92ND				
8045, 8045 A, 8055	ETS100D2N	MAG100D			
8060, 8065, 8070, 8075, 8080			HD120S	HD120S2/CS	
8060, 8065, 8070, 8075, 8075 A (older types)			HDI110S		SHDI140S
8085	ETS92ND				
8090			HD120S	HD120S2/CS	
8080, 8090 (older types)			HDI143S		SHDI180S
8110			HD120S	HD120S2/CS	
8100, 8120, 8130			HD155S	HD160S2/CS	
8100, 8110, 8110 A, 8110 Turbo, 8120, 8130, 8130 A, 8130 Turbo			HDI143S		SHDI180S
8140 DT, 8150	ETS92ND				
8140, 8140 DT, 8150, 8150 A, 8160, 8160 DT	ETS100D2N	MAG100D			
8160, 8160 DT, 8165, 8170, 8180	ETS92ND				
8165			HDI143S		SHDI180S
8180			HDI143S		SHDI180S
8300, 8320			HDI110S		SHDI140S
9078, 9086, 9094	ETS100D2N	MAG100D			
9115 Base			HD155S	HD160S2/CS	

	RUN / ETS / ES	MAGIS	CARGO/WET	CARGO/DRY	CARGO SHD
STEYR					
9115 Base, 9125, 9145 Comfort			HDI143S		SHDI180S
9125, 9145 Comfort			HD155S	HD160S2/CS	
9155, 9170, 9190			246850HD	HD110D2/CS	
CUT 130, CUT 170			HDI143S		SHDI180S
CVT 120, 130, 150			HD180S	HD180S2/CS-HD200S2/CS	
CVT 120, CVT 130, CVT 150, CVT 170			HDI143S		SHDI180S
CVT 170			HD180S	HD180S2/CS-HD200S2/CS	
D 80, 84	ETS60D3N-ETS62ND	MAG62D			
D 180	ETS92ND				
D 180, D 188, D 430, D 540, D 580	ETS100D2N	MAG100D			
M 958 Comfort	ETS92ND				
M 958, M 958 Comfort, M 968 Base, M 975 Comfort, M 9086, M 9094 Base	ETS100D2N	MAG100D			
M 968 Base	ETS92ND				
M 975 Comfort	ETS92ND				
M 9086, 9094 Base	ETS92ND				
TIMBERJACK					
215, 230			246850HD	HD110D2/CS	
404			246850HD	HD110D2/CS	
578 F			246850HD	HD110D2/CS	
678 F , 678 F Minibrunett, 678 P			246850HD	HD110D2/CS	
810 A, 810 B, 810 C, 810 C, 810-0			246850HD	HD110D2/CS	
870, 870 B (older types)			246850HD	HD110D2/CS	
990			246850HD	HD110D2/CS	
1010 B, 1010 D			246850HD	HD110D2/CS	
1110, 1110 C			246850HD	HD110D2/CS	
1270 B, 1270 C, 1270 D			HDI110S		SHDI140S
1410, 1410-0			246850HD	HD110D2/CS	
1470, 1470 D, 1710, 1710 B, 1710 D, 1710-0			HDI110S		SHDI140S
UNIVERASAL					
342	ETS100D2N	MAG100D			
400, 445, 445 DT, 445 DTC, 445 L, 445 ST, 445 V			HDI143S		SHDI180S
453			HDI143S		SHDI180S
530, 530 DT, 530 DTC, 530 L, 530 ST, 530 V			HDI143S		SHDI180S
533 (newer types)	ETS100D2N	MAG100D			
533 (older types)			HDI143S		SHDI180S
553			HDI143S		SHDI180S
600 H, 600 HC, 600 V, 640 DT, 640 DTC, 640 HC, 640 ST, 640 V			HDI143S		SHDI180S
640 Vigneron	ETS100D2N	MAG100D			
643			HDI143S		SHDI180S
703 Vigneron	ETS100D2N	MAG100D			
703, 703 DT			HDI143S		SHDI180S
850			HDI143S		SHDI180S
1010, 1010 DT, 1445, 1600, 1600 DTC, 1640			HDI143S		SHDI180S

	RUN / ETS / ES	MAGIS	CARGO/WET	CARGO/DRY	CARGO SHD
UNIVERASAL					
SM 640			HDI143S		SHDI180S
SV 530, SV 530 V			HDI110S		SHDI140S
U 400, V 400			HDI143S		SHDI180S
V 530			HDI110S		SHDI140S
URSUS					
60-35, 80-50, 85-90, 105-65, 120-85, 145-100, 160-110, 203, 204, 205, 206	ETS100D2N	MAG100D			
207, 208, 209, 210			HDI110S		SHDI140S
212, 214, 216	ETS100D2N	MAG100D			
534			HDI110S		SHDI140S
932, 934			HDI110S		SHDI140S
1001, 1004			246850HD	HD110D2/CS	
1134			HDI110S		SHDI140S
1201, 1204			246850HD	HD110D2/CS	
1222, 1224, 1232, 1234			HDI110S		SHDI140S
1454, 1604	ETS100D2N	MAG100D			
1614, 1630			HDI110S		SHDI140S
2802, 2812, 3502, 3510, 3514	ETS100D2N	MAG100D			
4512, 4514, 5310, 5312, 5314			HDI110S		SHDI140S
5514, 6514			246850HD	HD110D2/CS	
C 1201, C 1204			HDI110S		SHDI140S
L 445, U 445, U 650, U 651, V 445			HDI143S		SHDI180S
VALMET-VOLVO					
502, 504, 505 (newer types)			HDI143S		SHDI180S
588			HDI143S		SHDI180S
604, 605, 615, 615 M, 655, 662			HDI143S		SHDI180S
705, 715, 715 M			HDI143S		SHDI180S
755 (older types)			HDI143S		SHDI180S
805, 810, 815 (older types)			HDI143S		SHDI180S
855, 862 (older types), 862 K			HDI143S		SHDI180S
870, 872, 880, 882, 882 K, 886, 886 K, 892			HDI143S		SHDI180S
901			246800.1HD		
902			HDI143S		SHDI180S
905			HDI143S		SHDI180S
911			246800.1HD		
1103, 1203			HDI110S		SHDI140S
4100, 4300, 4400			HDI110S		SHDI140S
6000, 6100, 6200, 6250, 6300, 6350, 6400, 6550, 6600, 6650, 6750, 6800, 6850			HDI143S		SHDI180S
8000, 8050, 8100, 8150, 8200, 8300, 8350, 8400, 8450, 8550			HDI143S		SHDI180S
8600			246800.1HD		
8750, 8950			HDI143S		SHDI180S
A 25 Dumper			HDI110S		SHDI140S
A 65, A 75, A 85, A 95			HDI143S		SHDI180S
M 4			HDI143S		SHDI180S

	RUN / ETS / ES	MAGIS	CARGO/WET	CARGO/DRY	CARGO SHD
VALMET - VOLVO					
8300, 8400			HDI143S		SHDI180S
6100, 6200, 6300, 6400, 6600, 6800, 8100			HDI143S		SHDI180S
T 170, T 2020			HDI143S		SHDI180S
VALOR					
Alsace, Escalator	ETS74DI-ETS74ND	MAG74D			
G 40, HT 30	ETS74DI-ETS74ND	MAG74D			
Micromos, Motoriss 4, Motrice 4	ETS100D2N	MAG100D			
P 35, P 45, P 65	ETS74DI-ETS74ND	MAG74D			
VALPADANA					
4RM 18	ES45330S				
4RM 20/32	ETS40NS				
4RM 180, 260	ES70540S				
4RM 300R , 320RS	ETS40NS				
4RM 350, 450, 545RS, 555RS	ETS100ND				
4 RM 6055	ETS74DI-ETS74ND	MAG74D			
4RML	ETS92ND				
4RML 014	ETS40NS				
4 RM L, 4 RM R	ETS100D2N	MAG100D			
4RMR	ETS92ND				
440 RS, 1326	ES70540S				
1220 HST STD (1225 HST STD) (1330 HST STD)	ETS45ND	MAG45D			
1220 HST, 1220 STD, 1225 HST, 1225 STD	ETS50D4N				
1330HST, 1330 STD, 1540, 1545, 1550, 1555	ETS60D3N				
1540, 1545, 1550, 1555	ETS60D3N-ETS62ND	MAG62D			
2030	ETS74DI-ETS74ND	MAG74D			
2555, 2565, 2575, 2580			HD132D		
3565, 3570, 3580 Vigneto	ETS60D3N				
4040	ETS40NS				
4570, 4580, 4590, 4595	ETS100ND				
5570, 5580, 5590, 5595			HD132D		
6055, 7070	ES70540S				
6550, 6560, 6575 (ISM) (ISR REV)	ES70540S				
9000			246800.1HD		
CLIMBER 9565 Rev (9585 Rev)	ETS100ND				
FRUTTETO 3560, 3570, 3580, 3590, 3595	ETS100ND				
MTA 2030	ES70540S				
MULTITRAC 9565 Rev (9585 Rev)	ETS100ND				
VCM 8, 12, 14	ES45330S				
VCM 18	ETS74DI-ETS74ND	MAG74D			
VIGNETO 3565, 3570, 3580	ETS60D3N-ETS62ND	MAG62D			
VALTRA					
105, 115			HDI143S		SHDI180S
505			HDI143S		SHDI180S
605, 615 M, 655			HDI143S		SHDI180S

	RUN / ETS / ES	MAGIS	CARGO/WET	CARGO/DRY	CARGO SHD
VALTRA					
708			HDI143S		SHDI180S
715 M			HDI143S		SHDI180S
755			HDI143S		SHDI180S
805			HDI143S		SHDI180S
815 M			HDI143S		SHDI180S
820	ETS74DI-ETS74ND	MAG74D			
840			246800.1HD		
855			HDI143S		SHDI180S
860			246800.1HD		
862			HDI143S		SHDI180S
886 K			HDI143S		SHDI180S
890			HDI110S		SHDI140S
892			HDI143S		SHDI180S
901			246850HD	HD110D2/CS	
902			HDI143S		SHDI180S
905			HDI143S		SHDI180S
950			HDI143S		SHDI180S
1102, 1103, 1203			HDI143S		SHDI180S
3100, 3300, 3400, 3500	ETS100ND				
6000, 6100, 6200, 6300, 6400, 6600, 6800, 6900 ('98→)			HD155S	HD160S2/CS	
6000, 6100, 6200, 6250 HI, 6300, 6400, 6400 A, 6600, 6600 A, 6800, 6800 EEM			HDI143S		SHDI180S
6250HI-6850HI, 8050HI-8950HI (→10/'02)			HD155S	HD160S2/CS	
8000, 8100, 8200, 8400, 8050, 8150, 8450, 8550, 8750 ('98→)			HD155S	HD160S2/CS	
8350, 8400, 8450, 8550, 8750			HDI143S		SHDI180S
8950			HDI220S	HD220S2/CS	SHDI220S-SHD225S
8950 HI			HDI143S		SHDI180S
C90, C150			HDI143S-HD155S		SHDI180S
M120, M130, M150			HDI143S-HD155S		
S230, S260 (→10/'02)			HDI143S-HD155S		
T120, T130, T140, T160, T170, T180, T190			HDI143S-HD155S		
VOLVO BM					
180 C, 230			HDI110S		SHDI140S
305			HDI143S		SHDI180S
310, 312, 320			HDI110S		SHDI140S
350, 350 T, 400, 405, 430, 470			HDI143S		SHDI180S
502, 504, 505, 600, 602, 604, 605, 620			HDI143S		SHDI180S
621			246850HD	HD110D2/CS	
640			HDI143S		SHDI180S
641, 646			246850HD	HD110D2/CS	
650			HDI143S		SHDI180S
702, 705			HDI143S		SHDI180S
800, 802, 803, 805, 810, 814			HDI143S		SHDI180S
861 Dumper			HDI110S		SHDI140S
1641			HDI143S		SHDI180S

	RUN / ETS / ES	MAGIS	CARGO/WET	CARGO/DRY	CARGO SHD
VOLVO BM					
4200, 4200 B, 4300, 4300 B, 4400, 4500			246850HD	HD110D2/CS	
4500 B			HDI110S		SHDI140S
6000			HDI110S		SHDI140S
6300			246800.1HD		
6400, 6600			HDI143S		SHDI180S
8000			246850HD	HD110D2/CS	
8100 E, 8400, 8600			HDI143S		SHDI180S
A 20, A 20 B, A 20 C, A 20 Dumper			HDI110S		SHDI140S
A 25 D			HDI143S		SHDI180S
A 25 Dumper			HDI110S		SHDI140S
A 28, A 30, A 30 C, A 30 D, A 35, A 35 C, A 35 D, A 40, A 40 D			HDI143S		SHDI180S
BL 60, BL 61, BL 70, BL 71			246850HD	HD110D2/CS	
BM 25			HDI220S	HD220S2/CS	SHDI220S-SHD225S
BM 616, BM 616 B			HDI110S		SHDI140S
BM 621, BM 641, BM 646			246850HD	HD110D2/CS	
BM 845			246850HD	HD110D2/CS	
EC 15, EC 20, EC 25, EC 30, EC 35, EC 45, EC 45 Pro	ETS74DI-ETS74ND	MAG74D			
EC 50, EC 51, EC 70	ETS100D2N	MAG100D			
EC 160			246850HD	HD110D2/CS	
EC 240			HDI143S		SHDI180S
EC 240 B			HDI220S	HD220S2/CS	SHDI220S-SHD225S
EC 240 LC			HDI220S	HD220S2/CS	SHDI220S-SHD225S
EC 280			HDI110S		SHDI140S
EC 290 LC			HDI220S	HD220S2/CS	SHDI220S-SHD225S
EC 290, EC 290 B, EC 330 B			HDI220S	HD220S2/CS	SHDI220S-SHD225S
EC 340, EC 650			HDI143S		SHDI180S
EC 360 LC			HDI220S	HD220S2/CS	SHDI220S-SHD225S
EC 360, EC 360 B			HDI220S	HD220S2/CS	SHDI220S-SHD225S
EC 390, EC 450			HDI143S		SHDI180S
EC 460, EC 460 B			HDI220S	HD220S2/CS	SHDI220S-SHD225S
EC 650			HDI143S		SHDI180S
ECR 28, ECR 58	ETS74DI-ETS74ND	MAG74D			
EL 70, EL 70 C			246850HD	HD110D2/CS	
EW 140 B			HDI110S		SHDI140S
GM 616, GM 616 B, GM 646			246850HD	HD110D2/CS	
GMH 642-72, GMH 841-72			246850HD	HD110D2/CS	
L 20 B, L 25 B, L 30, L 30 B, L 32 B, L 35, L 35 B	ETS100D2N	MAG100D			
L 40, L 40 B, L 45, L 45 B	ETS74DI-ETS74ND	MAG74D			
L 50, L 50 C, L 50 D, L 50 E, L 60 E, L 70, L 70 C, L 70 D, L 70 E			246850HD	HD110D2/CS	
L 90, L 90 B, L 90 C, L 90 D, L 90 E			246850HD	HD110D2/CS	
L 110 E, L 120, L 120 B, L 120 C, L 120 D, L 120 E, L 150, L 150 C, L 150 D, L 150 E			HDI110S		SHDI140S
L 160, L 180, L 180 C, L 180 D, L 180 DHL, L 180 E, L 180 EHL			HDI110S		SHDI140S
L 220 D			HDI143S		SHDI180S

	RUN / ETS / ES	MAGIS	CARGO/WET	CARGO/DRY	CARGO SHD
VOLVO BM					
L 220 E, L 320			HDI110S		SHDI140S
L 480, L 4950, L 4951, L 4952, L 4953			HDI110S		SHDI140S
LM 218			HDI110S		SHDI140S
LM 621			246850HD	HD110D2/CS	
LM 641, LM 642, LM 654			246850HD	HD110D2/CS	
LM 841, LM 845, LM 846			246850HD	HD110D2/CS	
LM 4500 (newer types)			HDI110S		SHDI140S
MBS 830	ETS74DI-ETS74ND	MAG74D			
MK 694			246850HD	HD110D2/CS	
S 830	ETS100D2N	MAG100D			
SM 462, SM 661			HDI143S		SHDI180S
SM 668, SM 670, SM 863, SM 868			HDI143S		SHDI180S
SM 880			HDI143S		SHDI180S
SM 1640, SM 2140	ETS74DI-ETS74ND	MAG74D			
SM 3040, SM 4040	ETS100D2N	MAG100D			
T 1641, T 2654			HDI143S		SHDI180S
YALE					
GDP 40, GDP 50, GDP 60 EPB, GDP 70, GDP 80 EPB, GDP 110, GDP 140 EPB	ETS100D2N	MAG100D			
GEP	ETS50D4N				
GPO 32	ETS74DI-ETS74ND	MAG74D			
YALE & TOWNE					
204 A (Cummins engine)			246850HD	HD110D2/CS	
300			HDI110S		SHDI140S
2711 E			246850HD	HD110D2/CS	
3000			HDI110S		SHDI140S
G 1 F, GP 51 F			246850HD	HD110D2/CS	
LP 51-60 F			246850HD	HD110D2/CS	
ZETOR					
25 A, K			HD120S	HD120S2/CS	
25 A, 25 K, 50 Super			HDI143S		SHDI180S
50 SUPER			HD180S	HD180S2/CS-HD200S2/CS	
2011, 2511, 3011, 3320, 3321, 3340, 3341			246850HD	HD110D2/CS	
2011, 2511, 3011, 3511, 3545, 4011	RUN95D				
3320, 3321, 3340, 3341			HDI110S		SHDI140S
4511, 4712, 4718, 4911, 5011	RUN95D				
4511, 4712, 4718, 4911			246850HD	HD110D2/CS	
5011, 5011 S, 5045, 5211			HDI143S		SHDI180S
5211			HD180S	HD180S2/CS-HD200S2/CS	
5011, 5011 S, 5045, 5211			HDI143S		SHDI180S
5245, 5320, 5340			HD180S	HD180S2/CS-HD200S2/CS	
5511, 5545, 5711, 5718, 5745, 5748	RUN95D				
5411, 5511, 5545, 5711, 5718, 5745, 5748, 5911, 5945			246850HD	HD110D2/CS	
6441			HDI143S-HD155S		SHDI180S

	RUN / ETS / ES	MAGIS	CARGO/WET	CARGO/DRY	CARGO SHD
ZETOR					
6711, 6718, 6745, 6748, 6911, 6940, 6945, 6948			246850HD	HD110D2/CS	
7011, 7045, 7211, 7245			HDI143S		SHDI180S
7011, 7045, 7211, 7245			HD180S	HD180S2/CS-HD200S2/CS	
7441, 7520, 7540, 7711, 7745			HDI143S-HD155S		SHDI180S
8011, 8045, 8048, 8111, 8145			HDI110S		SHDI140S
8250			HD180S	HD180S2/CS-HD200S2/CS	
8441			HDI143S-HD155S		
8540			HD180S	HD180S2/CS-HD200S2/CS	
9245	RUN95D -ETS100D2N				
9520, 9540			HD180S	HD180S2/CS-HD200S2/CS	SHDI180S
10011, 10045	RUN95D				
10111, 10145, 10245	RUN95D-246850HD				
11245, 12011, 12045, 12111, 12145, 12245	RUN95D-246850HD				
14011			HD180S	HD180S2/CS-HD200S2/CS	SHDI180S
14145			HD180S	HD180S2/CS-HD200S2/CS	SHDI180S
16045, 16145			HD180S	HD180S2/CS-HD200S2/CS	SHDI180S
16245	RUN95D-246850HD				
16845			HD180S	HD180S2/CS-HD200S2/CS	SHDI180S

MAGNETI MARELLI

Tavole di comparazione
Cross reference guide
Gegenüberstellung
Table de correspondance
Tabla de equivalencias
Tabela de equivalências
Πινακας αντιστοιχιων
Tabela porównawcza
Кросс-таблица
Karşılaştırma

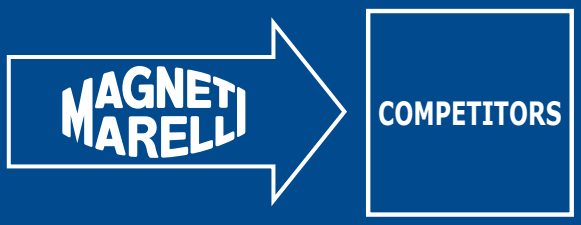

	Bosch	Fiamm	Exide	Varta
12 V - START				
SST63D		TR520	EL600	560.500.056
SST72D		TR680	EL700	570.500.065
AGM70D	S6001	VR760	EK700	570.901.076
AGM80D		VR800	EK800	580.901.080
AGM90D	S6002	VR900	EK900	595.901.085
12 V - RUN				
RUN44D		L044+	EB440	542.400.039
RUN50D	S5002	L154+	EA530	554.400.053
RUN62D	S5005	L264+	EA640	563.400.061
RUN72D	S5007	L380+	EA770	577.400.078
RUN95D	S5013	L5100+	EA1000	600.402.083
RUN105D	S5013	G28105	EA1050	
12 V - MAGIS				
MAG44DB	S4 001		EB 442	544 402 044
MAG45D			EB 440A	
MAG50D	S4 002		EB 500	552 400 047
MAG62DB	S4 004		EB 542	560 409 054
MAG62D	S4 005		EB 620	560 408 054
MAG72DB	S4 007		EB 712	572 409 068
MAG74D	S4 008		EB 740	574 012 068
MAG82DB	S4 010		EB 802	580 406 074
MAG88D				
MAG100D	S4 013		EB 950	595 402 080
12 V - ETS				
ETS40D1N			EC400	
ETS40NS		L1X44	EB501	545.413.040
ETS44D2N		L0 44+	EB440	
ETS44NDB	S4001	L1B44	EB442	544.402.044
ETS45ND	S3002	L144	EB440A	545.412.040
ETS50D3N	S4002	L150	EB500	552.400.047
ETS50D4N			EA530	
ETS50ND	S4002	L150	EB500	552.400.047
ETS50NDB	S3004	L2B50	EB542	553.400.047
ETS55NS	S4006	L2X60	EB621	560.127.054
ETS60D3N	S4005	L260	EB620	560.408.054
ETS60D4N			EA602	560.409.054
ETS60NDB	S4004	L2B60+	EA602	560.409.054
ETS62ND	S4005	L260	EB620	560.408.054
ETS63NS	S4009	L3X70	EB741	574.013.068
ETS65NDB	S4007	L3B71		
ETS70D1N			EC700	
ETS71NDB	S3007	L3B75+	EB712	570.144.064
ETS74ND	S4008	L374	EB740	574.012.068
ETS80ND		L482	EB802	-

	Bosch	Fiamm	Exide	Varta
12 V - ETS				
ETS85NDB	S3012	L5B85	EB852	588.403.074
ETS88D1N				
ETS90D1N			EB950	590.122.072
ETS92ND	S3013	L590	EB950	590.122.072
ETS95D1N	S4013	L590	EC900	595.402.080
ETS100D1N	S3013	L590	EB950	590.122.072
ETS100D2N	S3013	L590	EB950	590.122.072
ETS100KD		G28100	EB1000	600.123.072
ETS100ND		G28100	EB1000	600.123.072
ETS110D1N		L6110+		610.402.092
12 V - ES				
ES35240DJ	S4018	B19J35	EB356	540.126.033
ES35240DJ1		B19JAK35	EA386	
ES35240SJ	S4019	B19JX35	EB357	540.127.033
ES40320D	S4000		EC400	542.400.039
ES45300D	S4021	B2445	EB454	545.156.033
ES45300DJ	S4020	B24J45	EB456	545.155.033
ES45300S	S4023	E2X45	EB455	545.158.033
ES45300SJ	S4022	B24JX45	EB457	545.157.033
ES45330D	S3016	E245	EB450	545.077.030
ES45330S	S3017	E2X45	EB451	545.079.030
ES70540D	S4026	GR2470	EB704	570.412.063
ES70540S	S4027	GR24X70	EB705	570.413.063
ES100720S			EB1005	
436210ES	S3002	L144	EC440	545.412.040
ES45NDB				544.402.044
438320ES	S3005	L260	EB620	556.400.048
ES60NDB				560.409.054
476420ES	S4008	L374	EC700	574.012.068
ES70NDB				570.144.064
434440ES	S3013	L590	EC900	590.122.072
ES90NDB				588.403.074
12 V - CARGO				
ETS74DI				574.012.068
ETS95DI				590.122.072
HD105D	T3035	CB110	EG1100	610.047.068
HD105D2/CS				
246800.1HD			EG1102	
246850HD			EG1101	
HD110D2/CS				
HDI110S	T3038			
HD120D	T3039	MC12120	EG1406	620.109.076
HD120D2/CS				
HD120S	T3075	A120	EH1203	620.045.068
HD120S2/CS				

	Bosch	Fiamm	Exide	Varta
12 V - CARGO				
HD125D1			EF1257	
HD132D	T3046	MT132	EG1402	643.107.090
SHDI140S	T4076	A 135 SHD	EG1403	645.400.080
HDI143S				
HD155D	T3048	MC15160	EH1556	655.104.090
HD155S	T3077	B160	EH1553	655.013.090
HD160D2/CS		MC15 160		
HD160S2/CS		B 160		
HDI170S	T4078			670.104.100
HD180D	T3079	MC15185	EG1806	680.033.110
HD180D2/CS				
SHDI180S	T4078	B 180 SHD	EG1803	680.108.100
HD180S		B 180		
HD180S2/CS				
HD200S2/CS				
HD200S	T3080	CX200	EG2103	720.018.115
HDI220S	T4080	CX 225 SHD	EG2253	725.103.115
HD220S2/CS				
SHDI220S				
HD200D2/CS			ED2303	
SHD225S	T4080	CX 225 SHD	EE2253	725.103.115

Impaginazione ed impianti: esse*gi* **- Torino**